AMPLIFIER/COUPLER ACU-810A SUPPLEMENT FOR ASB-850 OPERATION AND MAINTENANCE MANUAL TM-8033000708

1989

SUNAIR 3101 SW Third Avenue, Ft. Lauderdale, FL 33315-3389

THIS PAGE INTENTIONALLY LEFT BLANK

TEST PROCEDURE

FINAL ALIGNMENT

ASB-850A SYSTEM

			Prep. by		1/9/89
			Proj. Eng.		1/9/89
Released	All	A 11/08/88	Appr.		
Change Doc.	Page	Rev. Date		NAME	Date

ENGINEERING SPECIFICATIONS

sunair electronics, inc. FORT LAUDERDALE, FLORIDA	TITLE TEST PROCEDURE ASB-850A	SPEC NO. 8099000021	ISSUE A
		PAGE 1 OF 16	PAGES

1.0 APPLICABLE DOCUMENTS

1.1 Bill of Material 8099000099

2.0 EQUIPMENT REQUIRED (or equivalent)

2.1	Signal Generator	Wavetek Model 3000
2.2	Generator Fuse	HP 11509A
2.3	Audio Generator	Heath Model (2 req.)
2.4	Wattmeter	Bird Model 43
2.5	100 Watt Element for above	
2.6	Power Supply, 28 V, 40 amp	HP6268A
2.7	Oscilloscope, 100 Mhz	Tektronix 465
2.8	Dummy Load, 50 ohm, 100 w	Bird Model 8135
2.9	Audio Voltmeter	HP 400H
2.10	Key/Control box	SATF
2.11	Frequency Counter	Systron Donner
2.12	Vacuum Tube Voltmeter	HP-410C
2.13	Coaxial Probe Adapter	HP-11042A
2.14	Power Cable	
2.15	Cable, RE to PA/Cplr	
2.16	Cable, Control Head to RE	
2.17	Microphone, Carbon	
2.18	Coaxial Cable, RG-58/U w BNC connectors	(2 req.)
2.19	Antenna Simulator	
2.20	Headphones	

3.0 PRELIMINARY

3.1 Using the appropriate cables, connect the three components of the system.

3.2 Connect the POWER connector to the 28V source.

3.3 Connect the antenna simulator to the HN connector on the rear panel of the ACU-810A.

3.4 Connect the cable to the audio connector on the rear of the Remote Control.

3.5 Connect a coaxial cable between the RF IN/OUT connector on the Receiver/Exciter and the RCV/EXC connector on the Amplifier/Coupler. Connect another coaxial cable between the PA OUT connector on the Amplifier/Coupler and the signal generator RF output connector.

3.6 Connect the audio voltmeter to the Receiver Output on the Remote control operating fixture.

3.7 Set the switches and controls on the Remote Control as follows:

VOLUME	Midrange
SQUELCH	Max clockwise
POWER	Off
DIMMER	Max clockwise

Select the USB mode by pressing the USB button.

3.8 Turn the power on by pressing the ON/OFF button on the Remote Control. The frequency display, the ON button and the USB button should all be illuminated. The frequency display may be flashing if the frequency selected is lower than 2.000 Mhz.

3.9 Measure the voltage on the collector of 1A101. This should be between +17 and +19 volts dc. Measure the voltage at E1 and E2 of the synthesizer mother board. The voltage at E1 should be between +11.2 and 12.8 volts dc, and the voltage at E2 should be between +4.75 and +5.25 volts dc.

4.0 FREQUENCY AND PROGRAMMING TEST

4.1 Remove the coaxial cable from the RCV/EXC connector on the Amplifier/Coupler. Connect the CH 1 Vert Output connector on the rear of the oscilloscope to the frequency counter. Connect the 10x probe of the oscilloscope to Channel 1 input.Set the oscilloscope gain to 0.2 v per centimeter.

4.2 Select the AM mode by pressing the AM button on the Remote Control. The lamp inside the USB button should go out, and that inside the AM button should illuminate.

4.3 Set the frequency to 0.0000 Mhz. Connect the probe of the oscilloscope to at pin 15 of 1A4A4 on the synthesizer mother board. Adjust R54 on the translator until this signal is 600 millivolts peak to peak.

4.4 Connect the oscilloscope probe to pin 1 of the VHF mixer on the R/E mother board. The signal should be at least 800 millivolts, and the frequency should be 80.75 Mhz plus or minus 5 Khz. Note the deviation of this frequency from 80.75 Mhz.

4.5 Connect the oscilloscope probe to pin 18 of the VHF mixer. The frequency at this point should be 91.25 Mhz plus or minus the deviation of the 2nd L.O. from 80.75 Mhz.

4.6 Connect the positive lead of the multimeter to the test point TP1 on the Low Digit Generator, and the negative lead to ground. This voltage should be between 1.70 and 1.80 volts dc. Adjust L3 on the Low Digit Generator to bring the voltage within these limits.

4.7 Set the 10 Khz selector on the Remote Control to the "9" position. The voltage should be within the limits of 1.70 and 1.80 volts dc. Adjust C8 on the Low Digit Board as necessary to bring the voltage within these limits.

4.8 Continue to adjust L3 and C8 on the Low Digit Board until the voltage is within the specified limits at "0" and "9" of the 10 Mhz selector. After this adjustment is complete, the voltage at the test point should remain within these limits at all positions of the 10 Mhz switch. Leave the 10 Mhz switch on "0".

4.9 Connect the positive lead of the multimeter to the test point TP1 on the VHF Divider.

4.10 Rotate the 1 Mhz switch between "0" and "9". The voltage at the test point should be between 1.70 and 1.80 volts dc. Adjust L1 and C16 on the VCO as necessary so that the voltage at the test point remains within its limits at these frequencies.

4.11 When the adjustment is complete, run the 1 Mhz switch throughout its range to verify that the test point voltage remains within the limits.

4.12 Set the 10 Mhz switch to "1".

4.13 Rotate the 1 Mhz switch between "0" and "9". The voltage at the test point should be between 1.70 and 1.80 volts dc. Adjust L4 and C27 on the VCO as necessary so that the voltage at the test point remains within its limits at these frequencies.

4.14 When the adjustment is complete, run the 1 Mhz switch throughout its range to verify that the test point voltage remains within the limits.

4.15 Set the 10 Mhz switch to "2".

4.16 Rotate the 1 Mhz switch between "0" and "9". The voltage at the test point should be between 1.70 and 1.80 volts dc. Adjust L7 and C38 on the VCO as necessary so that the voltage at the test point remains within its limits at these frequencies.

4.17 When the adjustment is complete, run the 1 Mhz switch throughout its range to verify that the test point voltage remains within the limits.

4.18 Disconnect the oscilloscope probe from channel 1 of the oscilloscope and connect the coaxial cable from the Receiver RF IN/OUT connector. Terminate this cable in a 50 ohm resistor.

4.19 Set the frequency to 20.0000 Mhz and key the ASB-850A. Set the oscilloscope gain as necessary to observe the RF output from the R/E. Adjust 1A1U2 frequency adjustment screw so that the frequency displayed on the counter is 20.0000 Mhz plus or minus 4 times the frequency offset from 5.0000 Mhz which is stamped on the TCXO. In no case should this frequency be more than 12 Hz offset from 20 Mhz.

NOTE - (For new TCXO units only) - If, before adjustment, the frequency deviates more than 40 Hz at 20 Mhz, the TCXO should be replaced since this is an indication of a defective component which will be likely to continue to drift.

4.20 Rotate the 100 Hz selector switch clockwise throughout its range. The frequency display on the Remote Control and the frequency displayed on the counter should both increment in 100 Hz steps through nine, and should then return to zero.

4.21 Rotate the frequency selectors 1 Khz through 1 Mhz in turn through their ranges. In each case, the appropriate digit of the display and the counter should increment as the switch is turned. Each time the 1 Mhz switch is incremented, the signal should disappear momentarily and then reappear. This is an indication that the 3rd L.O. blanking circuit is working. Leave the 1 Mhz switch on 2.

4.22 Rotate the 10 Mhz switch to 1 and then to 0. The display and counter should change as he switch is rotated. The 10 Mhz digit of the Remote Control display will extinguish when the zero is selected.

4.23 Rotate the 1 Mhz switch to 1. The display should begin flashing on and off, and the output from the Receiver /Exciter should disappear.

4.24 Unkey the ASB-850A and reconnect the coaxial cable to the Amplifier/Coupler.

5.0 RECEIVER TESTS AND ADJUSTMENTS

5.1 SENSITIVITY

5.1.1 Set the signal generator to 2.124 Mhz, CW mode, 0.5 microvolts output.

5.1.2 Set the ASB-850A to 2.123 Mhz, USB mode. A 1 Khz sine wave should appear on the oscilloscope. Adjust the VOLUME control on the Remote Control until the audio output level is -10 dbm.

5.1.3 Remove the RF from the PA OUT connector or detune the signal generator 1 Mhz. The audio level should decrease at least 15 db.

5.1.4 Measure the sensitivity at 1 Mhz increments throughout the range 2 to 29 Mhz, and at 29.995 Mhz. The sensitivity should be at least 12 db at all frequencies.

5.1.5 If the ASB-850A is equipped with the LSB option, measure the sensitivity at the last frequency. In this case, the signal generator must be set 1 Khz lower than the selected frequency.

5.1.6 Select AM mode and set the signal generator to 3 microvolts output, 29.995 Mhz, AM mode, 30% modulation at 1 Khz. Adjust the VOLUME control so that the audio level is -10 dbm.

5.1.7 Switch the signal generator to CW mode. The audio level should decrease by at least 15 db.

5.2 BANDWIDTH

5.2.1 Set the frequency of the ASB-850A to 16.125 Mhz. Select USB mode.

5.2.2 Set the signal generator to 0.5 *microvolts, 16.126 Mhz, FMx1 mode, VERNIER modulation. Adjust the vernier slide on the signal generator until the audio output level of the ASB-850A is maximum. It may be necessary to adjust the frequency selector switches on the signal generator in order to do this. This is a normal effect of the signal generator in this mode, and is not an indication of a malfunction of the equipment.

5.2.3 Connect a coaxial cable between the audio output and the oscilloscope channel 1 input. Adjust the vertical gain of the oscilloscope so that the audio frequency can be counted on the frequency counter.

5.2.4 Increase the frequency of the signal generator by sliding the vernier slide up until the audio output decreases 6 db. Increase the level of the signal generator by 20 db and note the audio frequency. This should be no lower than 2.5 Khz. Decrease the signal generator level to 0.5 microvolts.

5.2.5 Decrease the frequency of the signal generator by sliding the vernier down until the audio level passes through its peak value and again decreases by 6 db. Increase the signal generator level by 20 db and note the audio frequency. This should be 300 Hz or less. Decrease the signal generator to 0.5 microvolts.

5.2.5 If the ASB-850A is equipped with the LSB option, measure the bandwidth as it was done for the USB mode, however, increasing the signal generator frequency will decrease the audio frequency.

5.2.6 Set the signal generator to 16.125 Mhz, AM mode, 1 Khz modulation @ 30%, 3 microvolts output. Set the ASB-850A to AM mode.

5.2.7 Adjust the VOLUME control so that the audio level is at 0 db on a convenient scale of the audio level meter.

5.2.8 Increase the frequency of the ASB-850A 500 Hz, and decrease the frequency of the signal generator 2 Khz. The audio level should not decrease more than 6 db.

5.2.9 Increase the frequency of the signal generator 5 Khz. The audio level should not be lower than 6 db below that measured in step 5.2.7.

5.3 UNWANTED SIDEBAND REJECTION

5.3.1 Set the frequency of the ASB-850A to 6.1255 Mhz, and the frequency of the signal generator to 6.127 Mhz.

5.3.2 Set the mode of the signal generator to CW.

5.3.2 Remove the output from the signal generator, and adjust the VOLUME control until the audio output level is -20 dbm.

5.3.3 Reconnect the output from the signal generator and adjust the level until the audio output is -10 dbm.

5.3.4 Select LSB mode on the ASB-850A, and increase the output of the signal generator until the audio output level increases 10 db. This should require at least 50 db increase in level from the signal generator. Return the level of the signal generator to its previous setting.

5.3.5 If the ASB-850A is equipped with the LSB

option, decrease the frequency of the signal generator 3 Khz, and proceed as in 5.3.2 throuhg 5.3.4

5.4 GAIN AND AUDIO OUTPUT

5.4.1 Set the frequency of the ASB-850A to 16.123 Mhz, and the frequency of the signal generator to 16.124 Mhz. Set the mode of the ASB-850A to USB and the mode of the signal generator to CW.

5.4.2 Set the signal generator output to 10 microvolts, and turn the VOLUME control fully clockwise. Adjust R48 on the audio board in the RE until the audio output level is 5.5 volts rms.

5.5 AUTOMATIC GAIN CONTROL

5.5.1 Install the audio board of the RE on an extender and remove the output from the signal generator.

5.5.2 Measure the voltage at the AGC test point on the audio board. Adjust R10 of the audio board Fully counterclockwise, and then adjust clockwise until the voltage at the AGC test point just begins to decrease.

5.5.3 Reconnect the output from the signal generator and set its level to 250 millivolts. Adjust the VOLUME so that the audio level is 0 db on a convenient scale.

5.5.4 Decrease the signal generator level to 5 millivolts. The audio level should decrease 7 to 10 db. If it decreases less than 7 db, turn R48 counterclockwise until the change in audio level is approximately 8 db.

5.6 SQUELCH

5.6.1 Set the ASB-850A frequency to 4.123 Mhz and the mode to AM.

5.6.2 Set the signal generator to 4.123 Mhz, 20 microvolts, AM modulated 30% at 1 Khz.

5.6.3 Place the compressor board on its extender.

5.6.4 Turn the SQUELCH control fully counter-clockwise. Adjust R1 on the compressor board counter-clockwise until the audio from the ASB-850A disapears, and then turn R1 clockwise until the audio just reappears.

5.6.5 Remove the modulation from the signal generator. The receiver noise should disappear after a short delay.

5.6.6 Increase the level of the signal generator to 300 microvolts. The receiver noise should reappear. Replace the compressor board in its edge connector.

6.0 TRANSMIT TESTS AND ADJUSTMENTS

6.1 CARRIER SUPPRESSION

6.1.1 Remove the coaxial cable from the signal generator, and reconnect it to the 50 ohm load. Be sure that the oscilloscope and the HP-410C are connected.

6.1.2 Set the ASB-850A to 2.123 Mhz, USB mode. Remove any transmit audio input. just R34 and C25 on the sideband generator alternately until the output power from the ASB-850A is at a minimum.

6.1.3 Install the VHF mixer on its extender, and adjust the mixer gain, R16 so that the residual noise and carrier level is 0.2 volt rms. Replace the VHF mixer in the card cage.

6.2 TRANSMIT AUDIO ADJUSTMENTS

6.2.1 On the compressor board, set the COMP,AM and MIC controls fully counter-clockwise. Set the AUDIO control fully clockwise.

6.2.2 Connect two audio generators to the audio input connections of the audio combining network. Set the generators to frequencies of 1.800 Khz and 700 Hz. Set the two levels to 600 mv rms.

6.2.3 Key the ASB-850A and adjust the MIC control on the compressor board until RF power appears at the output of the PA. Adjust the levels of the audio generators until the two levels are equal as shown by a cross-over at zero level on the oscilloscope.

6.2.4 Continue to adjust the MIC control clockwise until the signal observed on the oscilloscope begins to distort or flat-top. If the power out of the ASB-850A should exceed 100 watts PEP as shown by an RF voltage in excess of 71 volts rms, adjust the ALC control on the sideband generator until the RF voltage output is 71 volts rms.

6.2.5 Adjust the COMP control clockwise until the signal appears essentially undistorted. If it is necessary, adjust the ALC control so that the RF output is 71 volts dc.

6.2.6 Measure the voltage at the ALC test point on the sideband generator and adjust the AUDIO control on the compressor until this voltage is 6.0 volts dc.

6.2.7 Remove the audio input and unkey the ASB-850A. Remove the sideband generator form its edge connector and reinstall on an extender.

6.2.8 Select AM mode and key the ASB-850A. Adjust the ACC control on the sideband generator until the RF output is 42 volts rms.

6.2.9 Adjust the carrier insertion control, R65 on the sideband generator until the voltage measured at the ALC test point is 6.0 volts dc. Readjust the ACC control as necessary to maintain 42 volts rms output.

6.2.10 Reconnect one audio tone at 600 millivolts input level, and adjust the AM control on the compressor board until modulation can be seen at approximately 50 percent. Adjust the frequency of the audio input until the modulation is at its maximum point. At this frequency adjust the AM control until the modulation is 95 to 100 percent.

6.2.11 Reduce the audio input level to 200 millivolts. The modulation percentage should decrease, but should not decrease to less than 85 percent. Unkey the ASB-850A.

6.2.12 Set the audio input level to 600 millivolts. Adjust the SIDETONE control until the audio output from the ASB-805A is 2.5 volts rms.

6.3 POWER LEVEL ADJUSTMENTS

6.3.1 Set the ASB-850A to 2.005 Mhz, USB mode. Reconnect the two-tone audio signal and set the level to 600 millivolts.

6.3.2 Key the ASB-850A and adjust the ALC control on the sideband generator so that the RF output from the ASB-850A is 71 volts rms.

6.3.3 Change the frequency to 29.905 Mhz and adjust C66 on the filter module until the RF voltage is 69 volts rms.

6.3.4 Check the power output at 1 Mhz intervals from 29.905 Mhz to 2.905 Mhz. The power output must be within the limits of 65 and 74 volts rms at all frequencies, and there should be no evidence of distortion or flat-topping of the signal seen on the oscilloscope. If flat-topping is observed. it is permissible to adjust the power level lower provided that it does not fall outside the above limits at any frequency.

6.3.5 Set the ASB-850A to 2.005 Mhz, AM mode. Remove the audio input and adjust the ACC control on the sideband generator board until the RF output is 42 volts rms.

6.3.6 Set the ASB-850A to 29.905 Mhz and adjust C69 on the filter module so that the RF output is 42 volts rms.

6.3.7 Check the power output at 1 Mhz intervals between 29.905 and 2.905 Mhz. The power must be between the limits of 40 and 49 volts rms at all frequencies.

6.3.8 Measure the dc voltage between E26 on the PA mother board and ground. Adjust C13 on the PA mother board until the voltage at this point is a minimum. This voltage should not exceed 0.3 volts dc. Unkey the ASB-850A.

7.0 COUPLER TUNING

7.1 UNGROUNDED ANTENNA

7.1.1 Connect the antenna simulator to the HN coaxial connector on the rear panel of the PA/Coupler. Connect the PA OUT connector through the wattmeters to the CPLR IN connector on the front panel of the PA/Coupler.

7.1.2 Set the antenna simulator to the ungrounded configuration.

7.1.3 Set the ASB-850A to 2.123 Mhz, USB mode. Press the TUNE button. The lamp inside the TUNE button should illuminate, and the FAULT lamp should go out.

7.1.4 After a few seconds, the green READY lamp should illuminate, and the TUNE lamp should darken.

7.1.5 Key the ASB-850A with the two-tone audio applied, and note the forward and reflected power indications on the wattmeters. The reflected power should not exceed 4% of the forward power.

7.1.6 Tune the following frequencies and measure the forward and reflected power at each frequency. In all cases, the reflected power should not exceed 4% of the forward power:

2.995	8.995
3.105	9.105
3.995	12.995
4.105	13.105
5.995	19.995
6.105	20.105
7.505	29.995

7.2 GROUNDED ANTENNA

7.2.1 Set the antenna simulator to the grounded configuration. Tune the coupler at the following frequencies:

2.995	8.995
3.105	9.105
3.995	12.995
4.105	13.105
5.995	19.995
6.105	20.105
7.505	29.995

In all cases, the reflected power should not exceed 4% of the forward power.

THIS COMPLETES THE TEST

TEST PROCEDURE

AMPLIFIER/COUPLER

ACU-810A

			Prep. by	11/08/88	
			Proj. Eng.	11/14/88	
Released	All	A 11/08/88	Appr.	11/14/88	
Change Doc.	Page	Rev. Date	NAME	Date	

ENGINEERING SPECIFICATIONS

sunair electronics, inc. FORT LAUDERDALE, FLORIDA	TITLE TEST PROCEDURE ACU-810A	SPEC NO. 8099300025	ISSUE A
		PAGE 1 OF 7	PAGES

1.0 APPLICABLE DOCUMENTS

1.1	SCHEMATIC DIAGRAM	PN 8099310071
1.2	MANUAL ASB-850A	PN 8099000706
1.3	BM,AMPLIFIER/COUPLER	PN 8099300092

2.0 EQUIPMENT REQUIRED (or equivalent)

2.1 Test Fixture TF8033300094
2.2 Signal Generator Wavetek 3000
(2 needed)
2.3 Wattmeter, Bird Model 43 (2 required)
2.4 100 watt and 50 watt elements for Bird Wattmeters
2.5 Oscilloscope, Tektronix 465
2.6 Multimeter, Simpson 260
2.7 Digital Voltmeter, HP-
2.8 Power Supply, 28 volts dc @ 15 amp.
2.9 Test Cable Assembly, PN 8033
2.10 50 ohm, 100 watt resistive load, Bird Model 8135
2.11 VTVM, HP-410C
2.12 Coaxial probe adapter for HP-410C
2.13 RF combiner, SATF
2.14 Antenna Simulator

3.0 SETUP

3.1 Connect the 28 volts to the test fixture and connect the test fixture to the PA/CPLR.

3.2 Connect the signal generator to the input connectors on the RF combiner, and connect the output of the combiner to the RCV/EXC connector on the front panel.

3.3 Connect the PA OUT connector on the ACU-810A through both wattmeters to the 50 ohm, 100 watt load.

3.4 Connect the HP-410C to the 50 ohm load using the coaxial probe adapter. Connect the oscilloscope to the 50 ohm load using the 10x probe.

4.0 POWER AMPLIFIER TESTS

4.1 Select Band 1 on the test fixture, and set the signal generators to 2.000 Mhz. and 2.002 Mhz.

4.2 Key the transmitter with the PA ON/OFF switch on the test fixture and adjust the signal generator level until the output peak envelope power is 100 watts. This

will be 71 volts rms indicated on the HP-410C. The levels from the two signal generators should be equal, as indicated by a zero crossover on the oscilloscope. There should be no more than 0.3 volts needed from each signal generator to obtain the proper output.

4.3 Unkey the PA and set the signal generator frequency to 3.000 Mhz. and 3.002 Mhz. Key the PA and adjust the output of the signal generators until the power output form the PA is 100 watts. The signal generator level should not exceed .3 volts.

4.4 Unkey the PA and switch to band 2. Key the PA and adjust the signal generator output levels as necessary until the power output is 100 watts. The signal generator level should not exceed .3 volts

4.5 Unkey the PA and set the generators to 4.000Mhz and 4.002 Mhz. Key the PA and adjust the generator levels to obtain 100 Wats PEP. The levels should not exceed .3 volts.

4.6 Check the output level of the PA at the edges of each filter band. Use the following frequency table to determine the band edges, and set the two signal generator frequencies 2 Khz apart.

BAND	LOW FREQ	HIGH FREQ	LEVEL
3	4 Mhz	6 Mhz	.35 v
4	6 Mhz	9 Mhz	.40 v
5	9 Mhz	13 Mhz	.50 v
6	13 Mhz	20 Mhz	.50 v
7	20 Mhz	30 Mhz	.50 v

4.7 During the performance of the above test, observe the waveform on the oscilloscope to be sure that there is no flat-topping of the signal at any frequency.

4.8 Connect the multimeter negative lead to ground, and the positive lead to TP5 on the test fixture. With the PA keyed and delivering 100 watts PEP to the 50 ohm load, adjust the ACC trimmer on the filter module and verify that the voltage is adjustable to between 6 and 8 volts dc. Leave the voltage set to 7 vdc.

4.9 Move the meter lead to TP6 and adjust the ALC trimmer on the filter module. The voltage should be adjustable from 5 to 9 volts dc. leave the voltage set to 7 volts dc. Unkey the PA.

4.10 Set the frequency to 2.123 Mhz. and select Band 1. Key the ACU-810A and adjust the signal generator level until the output from the ACU-810A is 100 watts PEP.

4.11 Measure the voltage at E26 on the mother board. Adjust C13 on the mother board until this voltage is a minimum. This should not exceed 0.3 volts dc.

5.0 COUPLER TESTS

5.1 Measure the voltage at TP1 on the computer board. This should be 10 v plus or minus .5 v dc.

5.2 Measure the voltage at TP2. Adjust R29 until the voltage at this point is half the voltage at TP1.

5.3 Connect the digital voltmeter leads between TP4 and TP5 of the computer board, with the negative lead in TP5. Adjust R6 on the CPU until the meter indicates 250 plus or minus 5 millivolts.

5.4 Move the negative lead of the DVM to TP2 and adjust R61 until the meter indicates 125 plus or minus 5 millivolts.

5.5 Move the positive lead to TP5 and be sure that the voltage is -125 plus or minus 5 millivolts. If this is not the case, repeat steps 5.1 and 5.2 as often as necessary until the stated conditions are met.

5.6 Connect the negative lead to TP7 and the positive to TP6. Adjust R19 until the voltage indicated is 250 millivolts plus or minus 5 millivolts.

5.7 Move the negative lead of the DVM to TP2. Adjust R66 until the voltage indicated is 125 millivolts plus or minus 5 millivolts.

5.8 Connect the positive lead to TP7 and verify that the voltage is -125 millivolts plus or minus 5 millivolts.

5.9 Repeat 5.7 and 5.8 as necessary so that both conditions are met.

5.10 Remove one of the signal generator outputs from the RF combiner by turning the attenuator fully counter-clockwise. Set the other to 2.0 Mhz.

5.11 Select filter band 1 and key the PA. Adjust the signal generator output until the RF power output is 35 watts. Unkey the PA.

5.12 Disconnect the wattmeters from the 50 ohm load and reconnect to the COUPLER IN connector on the ACU-810A. Connect the antenna simulator to the RF connector on the rear panel of the ACU-810A.

5.13 Press the TUNE START button on the test fixture. The TUNING light should illuminate, and the wattmeters should show forward power indications. The ACU-810A should be tuning, as evidenced by a varying power out indication on the wattmeters.

5.14 After a period of time, the READY lamp should illuminate, and the coupler should stop tuning. Key the PA, and observe the forward and reflected power. The reflected power should be no more that 4% of the forward power.

5.15 Repeat the tuning test at the frequencies listed in the following table. Be sure to select the proper frequency band, and set the power level to 35 watts each time the frequency is changed.

FREQUENCY	BAND
2.995	1
3.105	2
3.995	2
4.105	3
5.995	3
6.105	4
8.995	4
9.105	5
12.995	5
13.105	6
19.995	6
20.105	7
29.995	7

5.16 Disconnect the cable from the RF combiner to the ACU-810A, and press the TUNE START button. The TUNING lamp should illuminate for approximately 10 seconds, then the FAULT lamp should illuminate.

THIS CONCLUDES THE TEST

THIS PAGE INTENTIONALLY LEFT BLANK.

	FINAL ASSY, TESTED	8099300092
	PC ASSY, DETECTOR/PAD	8056160094
	RF ASSEMBLY DCU-100	8080003092
	CHASSIS ASSY ACU-810A	8099310098
	COMPUTER MODULE, ACU-810A	8099324099
	RF PWER AMP ASSY ACU-810A	8099360095
	FILTER ASSY, ACU-810A	8099370091
	COVER, BOTTOM 810A	8099310802
	ENCLOSURE, PA/COUPLER 810A	8099303202
	LABEL, ALIGNMENT, ASB-850	1005040028
	NAME PLATE, TSO ACU-810A	8099381203
	PIN, DRIVE NO. 0 X 1/8 LG.	0533180007
	STANDOFF, F-F, 6-32 .500 L	1000960013

	FRONT PANEL ASSY	8099380096
C2	CAP. 0.47μF, 50V, X5V, 20%	0283370009
C3	CAP. 0.47μF, 50V, X5V, 20%	0283370009
C7	CAP. .01μF, 50V, X7R 20%	0281730008
C8	CAP. 0.47μF, 50V, X5V, 20%	0283370009
C9	CAP. 0.47μF, 50V, X5V, 20%	0283370009
C11	CAP. 0.47μF, 50V, X5V, 20%	0283370009
F1	FUSE, AGC, 5 AMP, 32V	0848980000
L2	INDUCTOR, CHOKE, TOROID, 9.0MH	0937720003
	CONNECTOR, RF, BNC UG-1094/U	0743740009
	CONNECTOR, RF, UHF	0753300001
	CONNECTOR, POWER, 2 PIN ROUND	0754560007
	FUSEHOLDER, PANEL MOUNT	0849030005
	HANDLE, MODIFIED	1003130003
	LABEL, AMPLIFIER/COUPLER	8099380801
	LOGO, BUTTON STYLE SUNAIR	1000150011
	PANEL, FRONT	8099380401

	CHASSIS ASSY	8099310098
C6	CAP. 0.47μF, 50V, X5V, 20%	0283370009
C10	CAP. 0.47μF, 50V, X5V, 20%	0283370009
CR1	DIODE, TRANSZORB 1N5646A	1006680021
CR2	DIODE, RECTIFIER 1N4004	0405180004
CR4	DIODE, RECTIFIER 1N4004	0405180004
K1	RELAY, SPST, 24V, POWER 60A	0660040000
L1	INDUCTOR, CHOKE, A+, 40μH	0563720000
	BRACKET, RELAY MTG	8099310217
	CONNECTOR, RF, HN UG-496/U	0753040000

	RF ASSEMBLY	8080003092
2A2A1	PC ASSY, INPUT BOARD DCU-100	8080030090
2A2A2	PC ASSY, INTERMEDIATE DCU-100	8080040095
2A2A3	PC ASSY, INDUCTOR BD DCU-100	8080050091
2A2A4	PC ASSY, OUTPUT BOARD DCU-100	8080060096
	BRACKET, RF ASSY, FRONT	8080003203
	BRACKET, RF ASSY, FRONT	8080003203
	BRACKET, RF ASSY, REAR	8080003301
	BRACKET, RF ASSY, REAR	8080003301

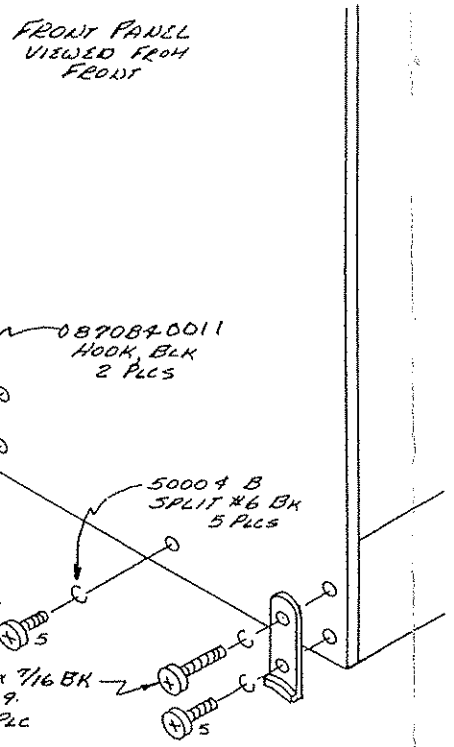
FRONT PANEL
VIEWED FROM
FRONT
0870840011
HOOK, BLK
2 PLCS
50004 B
SPLIT #6 BK
5 PLCS
5
7/16 BK
5

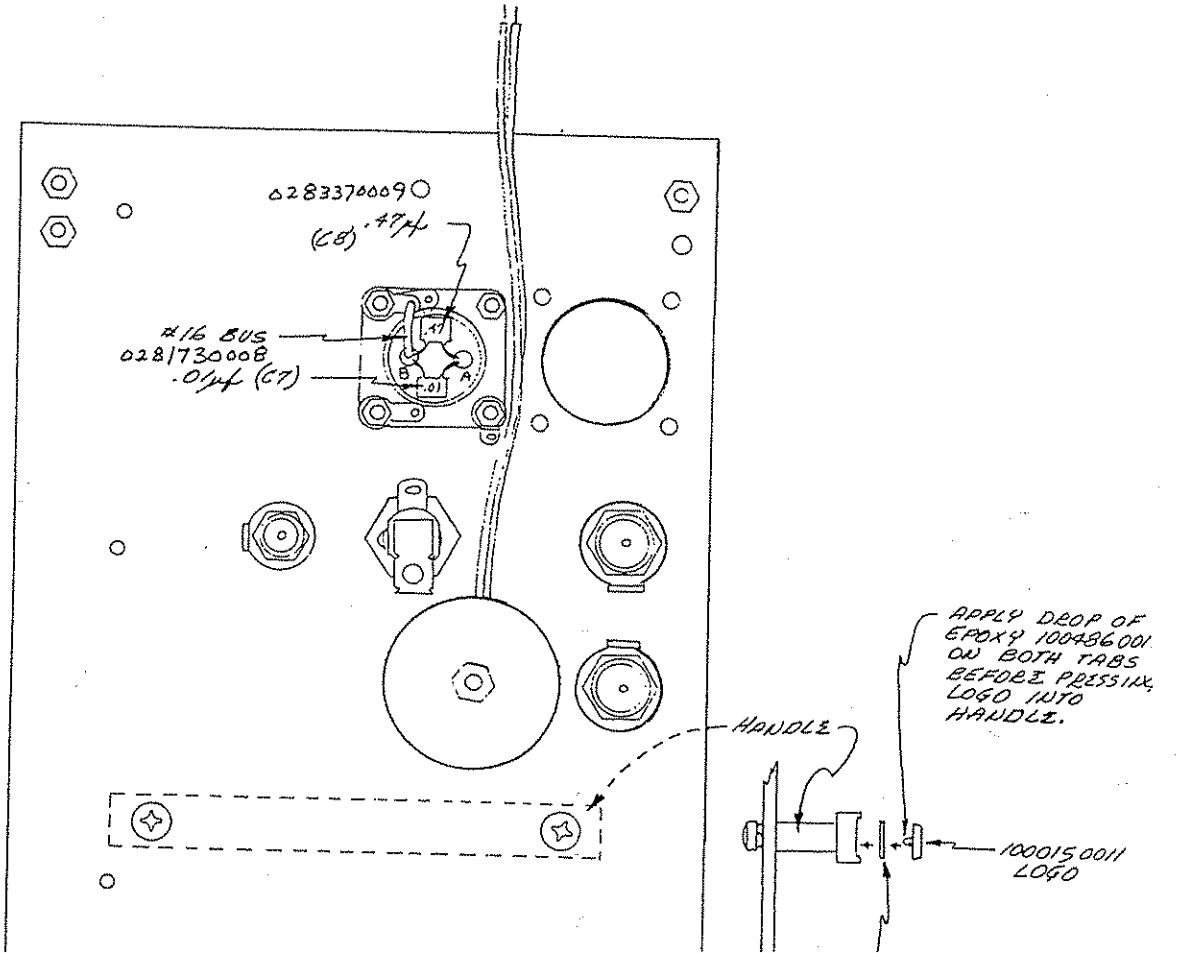
0283370009
(C8) .47µf
#16 BUS
0281730008
.01µf (C7)
B
A
HANDLE
APPLY DROP OF
EPOXY 100486001
ON BOTH TABS
BEFORE PRESSING
LOGO INTO
HANDLE.
100015 0011
LOGO

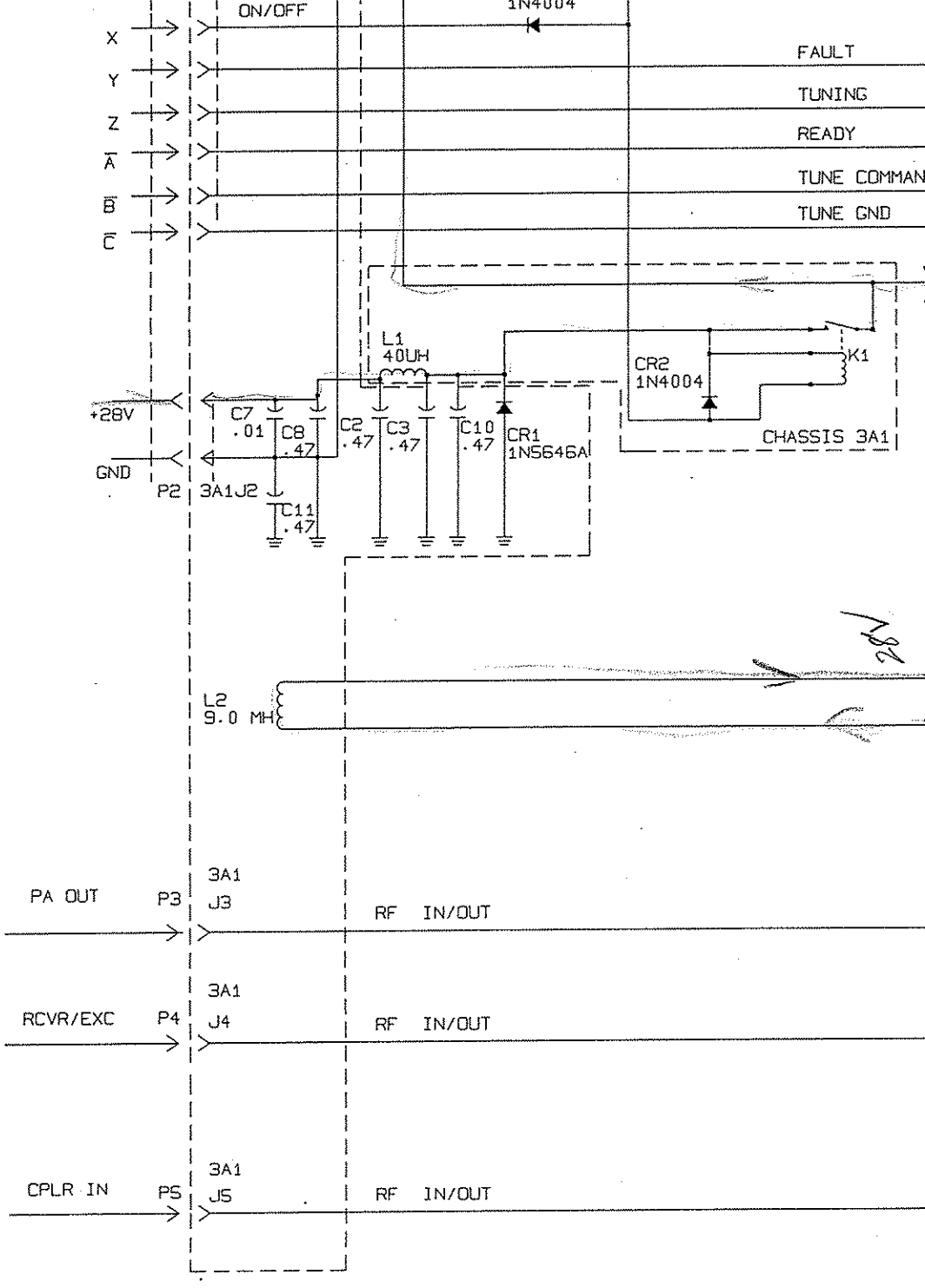
ON/OFF
1N4004
X
Y
Z
A
B
C
FAULT
TUNING
READY
TUNE COMMAN
TUNE GND
L1
40UH
CR2
1N4004
K1
CHASSIS 3A1
+28V
GND
P2
3A1J2
C7
.01
C8
.47
C2
.47
C3
.47
C10
.47
CR1
1N5646A
C11
.47
L2
9.0 MH
PA OUT
P3
3A1
J3
RF IN/OUT
RCVR/EXC
P4
3A1
J4
RF IN/OUT
CPLR IN
P5
3A1
J5
RF IN/OUT

SUNAIR ACU-810A

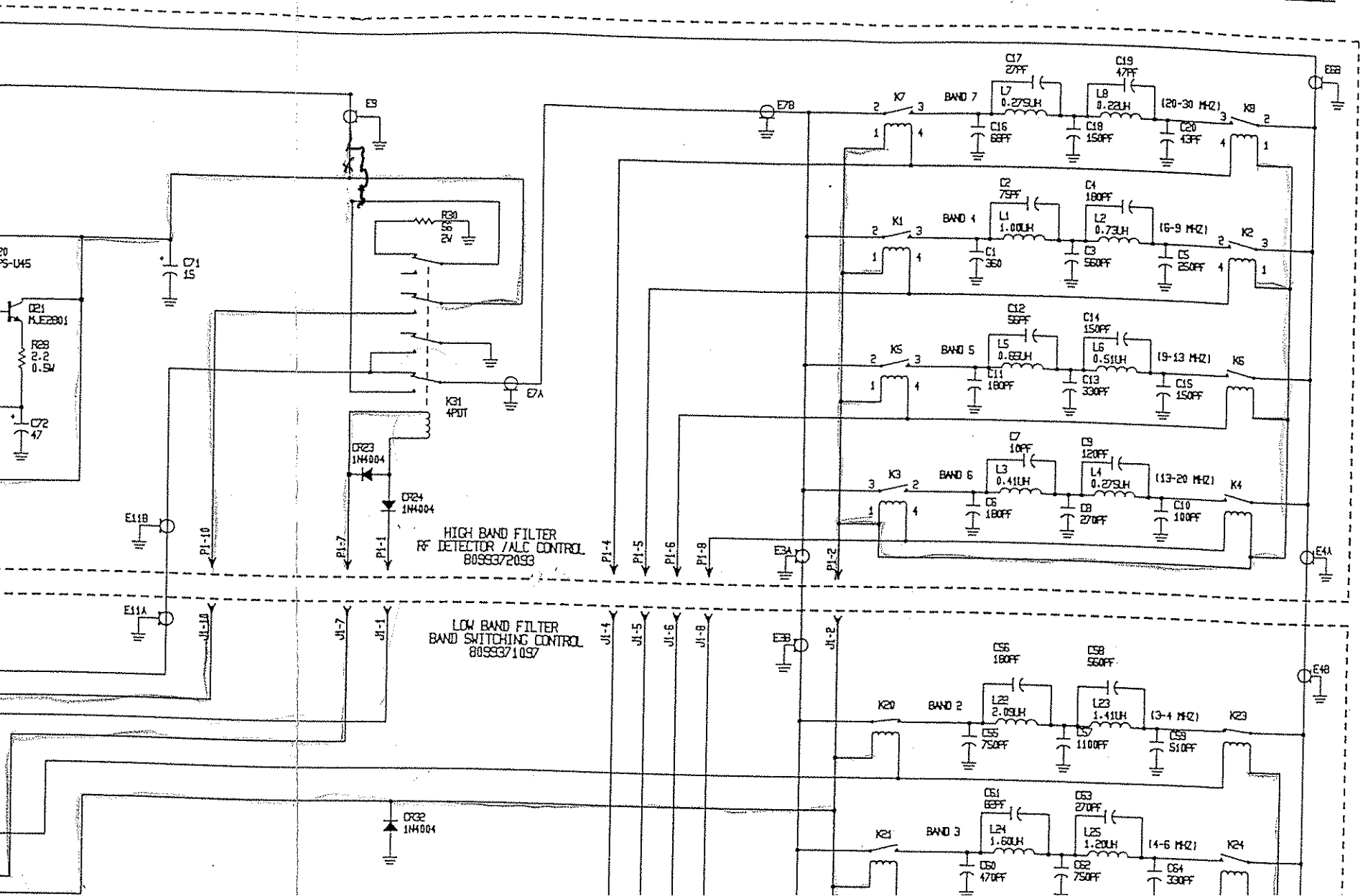

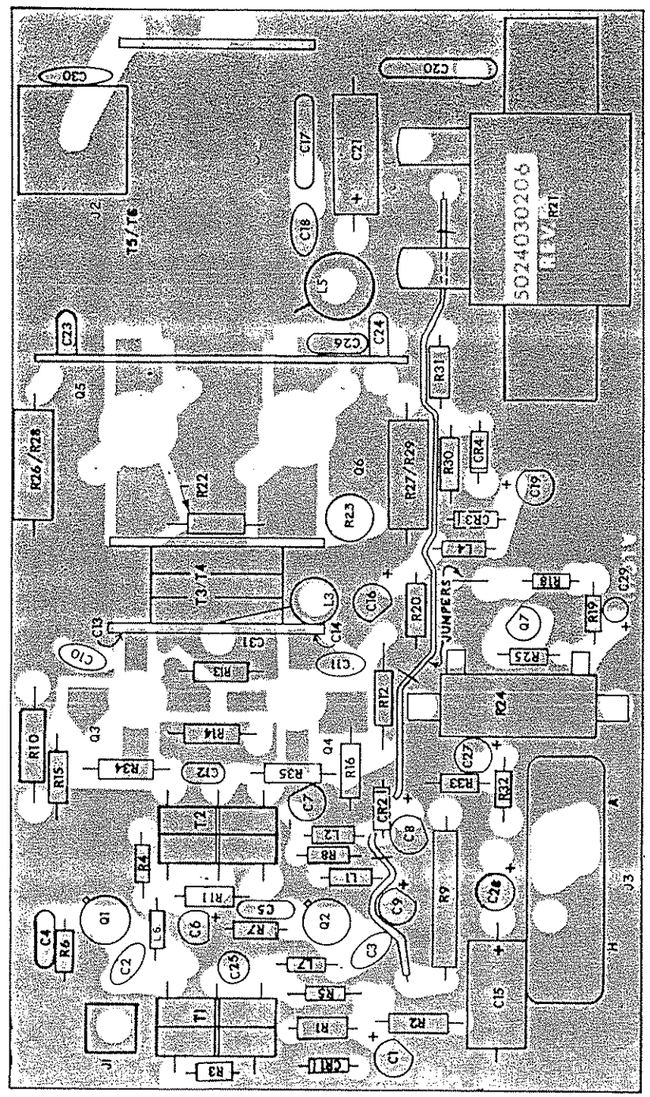

	RF POWER AMPLIFIER ASSY	8099360095
A1	DRIVER TRANSFORMER ASSY.	5024030893
A2	OUTPUT TRANSFORMER ASSY.	5024031199
C2	CAP. .01μF, 50V, X7R 20%	0281730008
C3	CAP. .01μF, 50V, X7R 20%	0281730008
C4	CAP. 0.0022μF, 200V, Z5F, 10%	0272780006
C5	CAP. 0.0022μF, 200V, Z5F, 10%	0272780006
C6	CAP. 1μF, 50V, 198D	0280910002
C7	CAP. 1μF, 50V, 198D	0280910002
C8	CAP. 1μF, 50V, 198D	0280910002
C9	CAP. 1μF, 50V, 198D	0280910002
C10	CAP. .01μF, 50V, X7R 20%	0281730008
C11	CAP. .01μF, 50V, X7R 20%	0281730008
C12	CAP. .01μF, 25V, X55/Y5P	0281627771
C13	CAP. 0.1μF, 50V, X7R, 20%	0281610002
C14	CAP. 0.1μF, 50V, X7R, 20%	0281610002
C15	CAP. 47μF, 50V, CL65B	0245750002
C16	CAP. 1μF, 50V, 198D	0280910002
C17	CAP. 0.01μF, 250V, X5V, 20%	0280950004
C18	CAP. 0.1μF, 50V, X7R, 20%	0281610002
C19	CAP. 1μF, 50V, 198D	0280910002
C21	CAP. 125μF, 3V,	0266020003
C23	CAP. 0.1μF, 50V, X7R, 20%	0281610002
C24	CAP. 0.1μF, 50V, X7R, 20%	0281610002
C25	CAP. 47μF, 20V, 196D	0281700001
C26	CAP. 0.001μF, 250V, X5R, 10%	0286260000
C27	CAP. .22μF, 35V, T368	0283510005
C28	CAP. 47μF, 20V, 196D	0281700001
C29	CAP. 1μF, 50V, 198D	0280910002
C30	CAP. 51PF, 500V, DM15, 2%	0281350001
C31	CAP. 7-35PF, 160V, N1500	0287390004
CR1	DIODE, SIGNAL, SIL 1N4454	0405270003
CR2	DIODE, RECTIFIER 1N4004	0405180004
CR3	DIODE, RECTIFIER 1N4004	0405180004
CR4	DIODE, SIGNAL, SIL 1N4454	0405270003
J1	CONNECTOR, RF, SNAP-ON	1000170012
J2	CONNECTOR, RF, SNAP-ON	1000170012
J3	CONNECTOR, POWER, 7 PIN RECT.	0753590000
L1	INDUCTOR, MOLDED, 22μH, 5%	0650000005
L2	INDUCTOR, MOLDED, 6.8μH, 5%	0659210002
L3	CHOKE, RF	5024030605
L4	INDUCTOR, MOLDED, 2.7μH, 5%	0652180001
L5	CHOKE, RF	5024030702
L6	INDUCTOR, MOLDED, 2.7μH, 5%	0652180001
L7	INDUCTOR, MOLDED, 2.7μH, 5%	0652180001
Q1	TRANSISTOR, NPN, SI. 2N3866	0448140004
Q2	TRANSISTOR, NPN, SI. 2N3866	0448140004
Q3	TRANSISTOR, NPN, SI. 2N4127	0448150000
Q4	TRANSISTOR, NPN, SI. 2N4127	0448150000
Q5	TRANSISTOR, NPN, SI.	0448170001
Q6	TRANSISTOR, NPN, SI.	0448170001
Q7	TRANSISTOR, PNP, SI. 2N4249	0446780006
R1	RESISTOR 10, 5%, 1/4W	0177160004
R2	RESISTOR 50, 10%, 30W	0193240009
R2	RESISTOR 1K, 10%, 1/2W	0167480006
R3	RESISTOR 82, 10%, 1/4W	0184610001
R4	RESISTOR 330, 5%, 1/4W	0170910008
R5	RESISTOR 330, 5%, 1/4W	0170910008

R6	RESISTOR 10, 5%, 1/4W	0177160004
R7	RESISTOR 10, 5%, 1/4W	0177160004
R8	RESISTOR 22, 10%, 1/4W	0192690001
R9	RESISTOR 300, 5%, 5W	0161140009
R10	RESISTOR 820, 10%, 1/2W	0175600007
R11	RESISTOR 1K, 10%, 1/2W	0167480006
R12	RESISTOR 820, 10%, 1/2W	0175600007
R13	RESISTOR 1, 10%, 1/2W	0194770001
R14	RESISTOR 1, 10%, 1/2W	0194770001
R15	RESISTOR 1, 10%, 1/2W	0194770001
R16	RESISTOR 1, 10%, 1/2W	0194770001
R18	RESISTOR 1K, 10%, 1/2W	0167480006
R19	RESISTOR 3.3K, 5%, 1/2W	0184090008
R20	RESISTOR 3.3, 10%, 1/2W	0186050003
R22	RESISTOR 39, 10%, 1/2W	0165920009
R23	POT. 10, 5% 1/2W, PC MOUNT	0346380006
R24	RESISTOR 0.1, 10%, 15W	0193360004
R25	RESISTOR 470, 5%, 1/4W	0184110009
R26	RESISTOR 10, 10%, 2W	0163840008
R27	RESISTOR 10, 10%, 2W	0163840008
R28	RESISTOR 10, 10%, 2W	0163840008
R29	RESISTOR 10, 10%, 2W	0163840008
R30	RESISTOR 150, 10%, 1/4W	0172730007
R31	RESISTOR 5.1K, 5%, 1/2W	0183700007
R32	RESISTOR 470, 5%, 1/4W	0184110009
R33	RESISTOR 2.7K, 10%, 1/4W	0186670001
R34	RESISTOR 2.2, 10%, 1/2W	0178690007
R35	RESISTOR 2.2, 10%, 1/2W	0178690007
T1	TRANSFORMER INPUT	5024030401
T2	TRANSFORMER INTERSTAGE	5024030508
	BRACKET, COVER SUPPORT	8099300106
	HEAT SINK	0840730004
	HEAT SINK, MACHINED	8099361407
	MOUNTING PAD, TRANSISTOR	0502710004
	SPACER, .171 ID,.312 OD, .187L	0502270691
	SPACER, .140 ID,.250 OD, .250L	0502270616
	SPACER, .140 ID,.250 OD, .187L	0535400004
	SPACER, .155 ID,.187 OD, .800L	0508050006
	SPACER, .155 ID,.187 OD,2.150L	0508210003
	SPACER, PLATE	5024031504

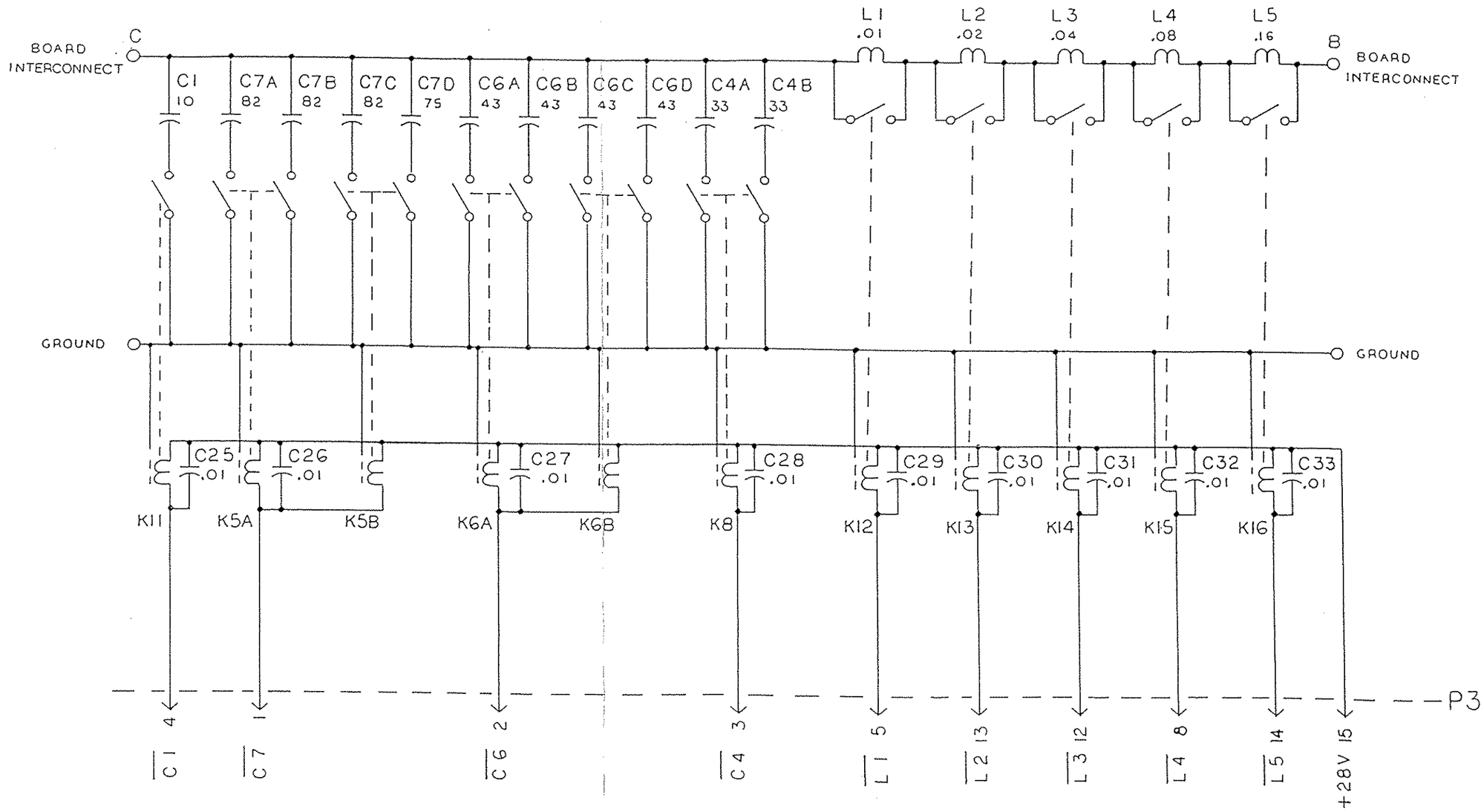

NOTES, UNLESS OTHERWISE SPECIFIED:

1. DECIMAL CAPACITORS ARE IN MICROFARADS, ALL OTHERS ARE IN PICOFARADS.
2. INDUCTORS ARE IN MICROHENRIES.

Intermediate Board **Schematic**

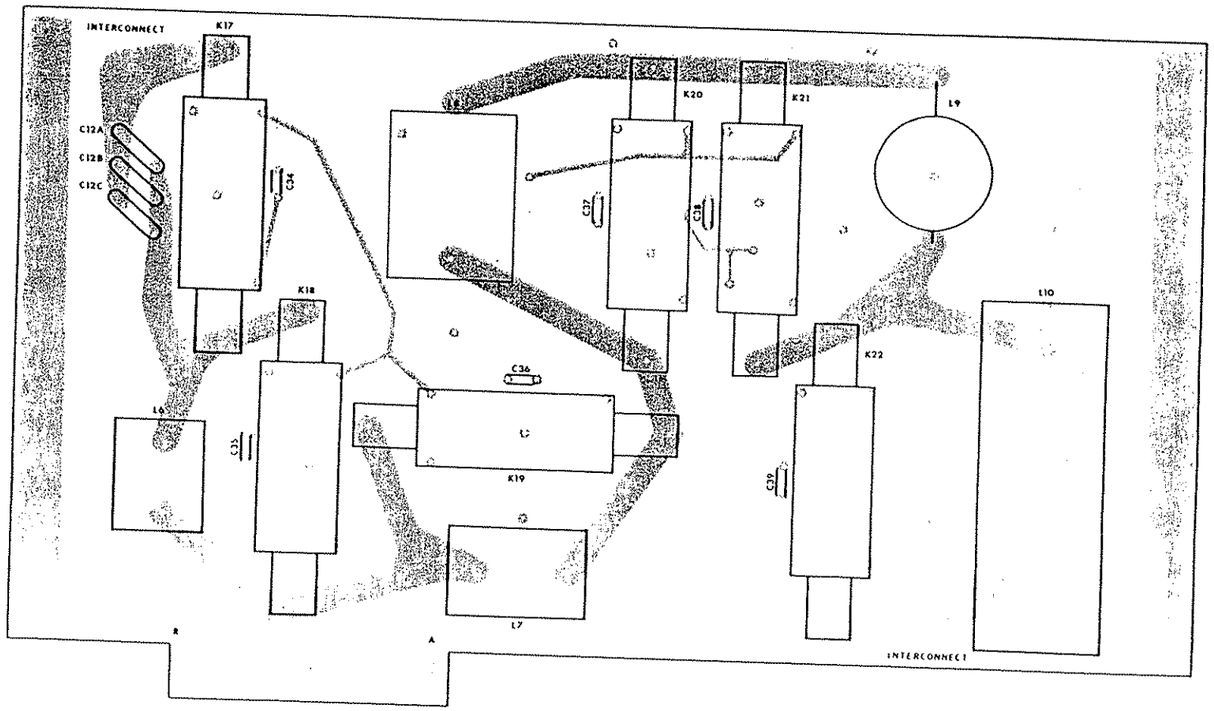

	PC ASSY, INDUCTOR BOARD	8080050091
C12A	CAP. 10PF, 3K0V NPO	0259690007
C12B	CAP. 10PF, 3K0V NPO	0259690007
C12C	CAP. 10PF, 3K0V NPO	0259690007
C34	CAP. 0.1μF, 50V, X7R, 20%	0281610002
C35	CAP. 0.1μF, 50V, X7R, 20%	0281610002
C36	CAP. 0.1μF, 50V, X7R, 20%	0281610002
C37	CAP. 0.1μF, 50V, X7R, 20%	0281610002
C38	CAP. 0.1μF, 50V, X7R, 20%	0281610002
C39	CAP. 0.1μF, 50V, X7R, 20%	0281610002
K17	RELAY, REED, HV, 24V, 1 FORM A	1005920001
K18	RELAY, REED, HV, 24V, 1 FORM A	1005920001
K19	RELAY, REED, HV, 24V, 1 FORM A	1005920001
K20	RELAY, REED, HV, 24V, 1 FORM A	1005920001
K21	RELAY, REED, HV, 24V, 1 FORM A	1005920001
K22	RELAY, REED, HV, 24V, 1 FORM A	1005920001
L6	INDUCTOR, 0.35μH	8080050601
L7	INDUCTOR, 0.70μH	8080050708
L8	INDUCTOR, 1.33μH	8080050805
L9	INDUCTOR, 2.62μH	8080050902
L10	INDUCTOR, 5.64μH	8080051003

PC ASSY, INDUCTOR BOARD

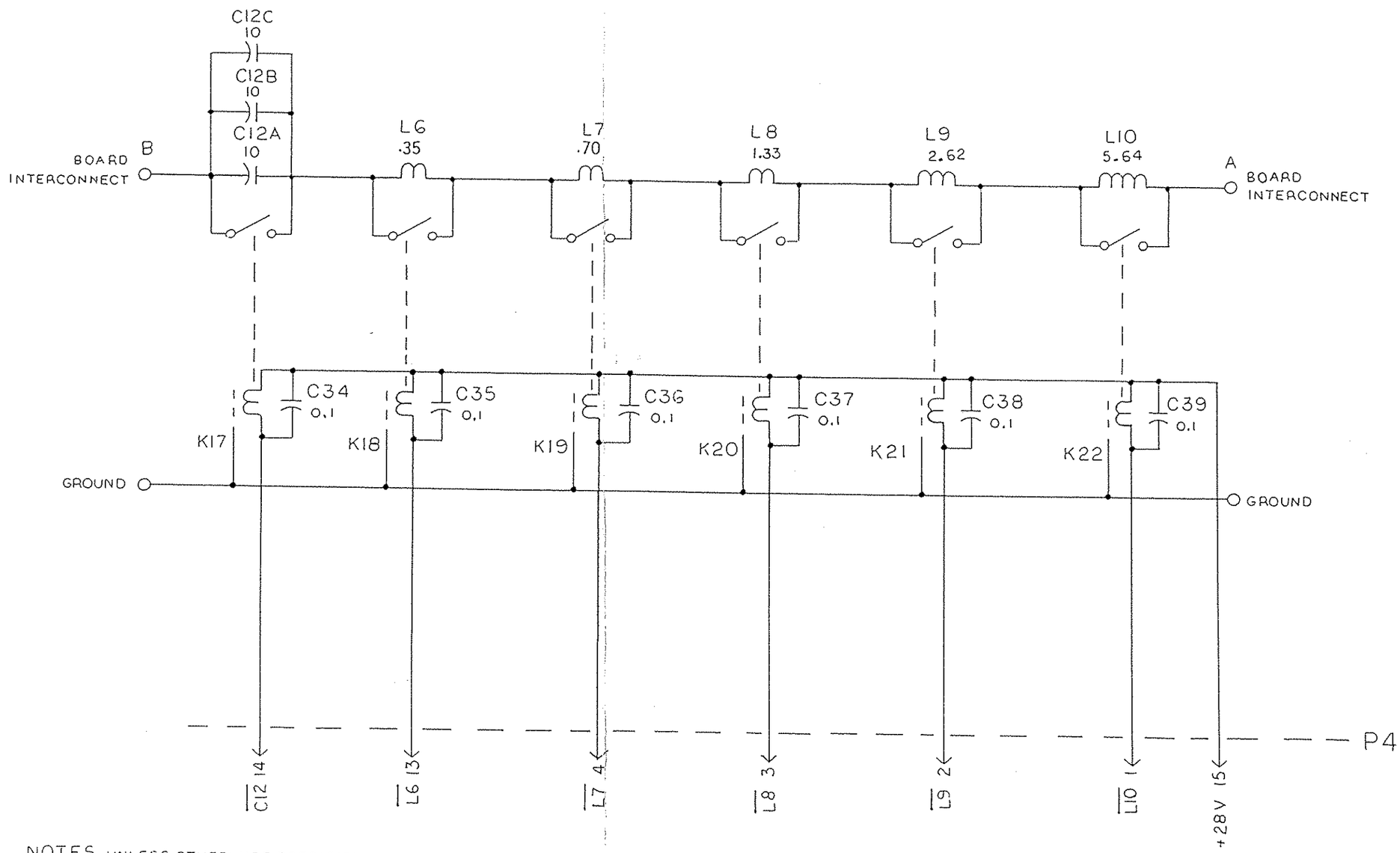

NOTES. UNLESS OTHERWISE SPECIFIED:

1. DECIMAL CAPACITORS ARE IN MICROFARADS, ALL OTHERS ARE IN PICOFARADS.
2. ALL INDUCTORS ARE IN MICROHENRIES.

Inductor Board **Schematic**

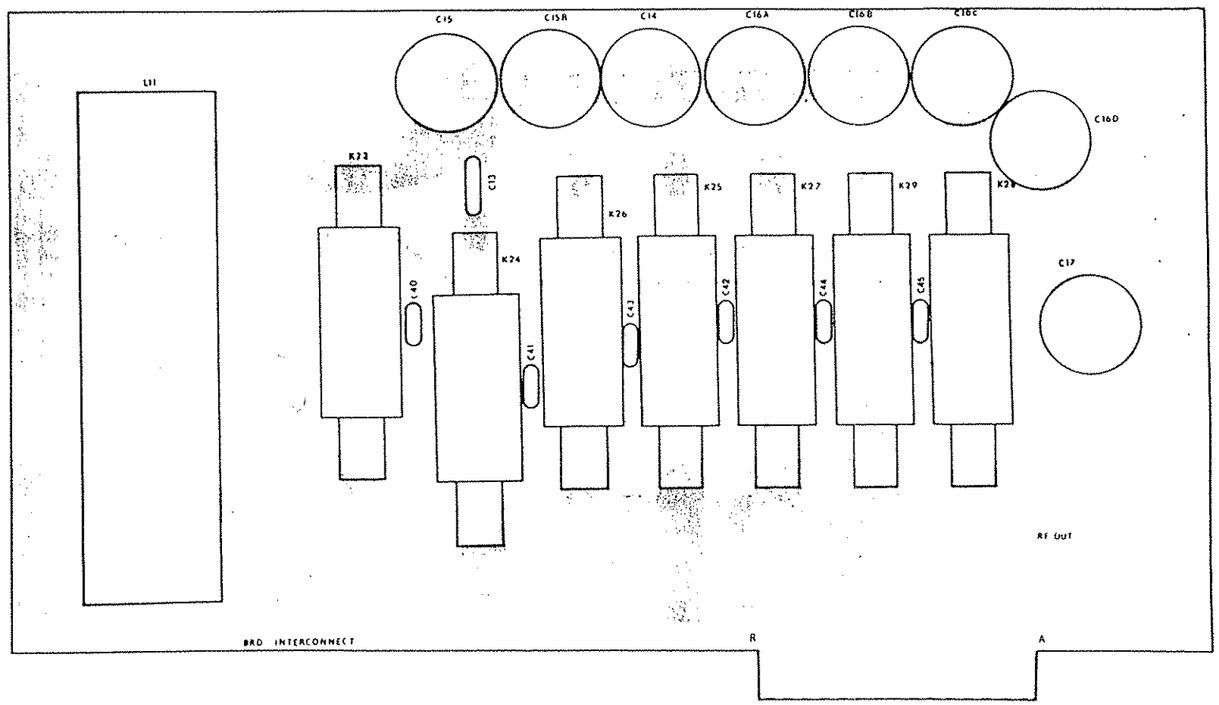

	PC ASSY, OUTPUT BOARD	8080060096
C13	CAP. 50PF, 7.5KV, NPO	0290200008
C14	CAP. 100PF, 5KV, N750	0290440009
C15A	CAP. 100PF, 5KV, N750	0290440009
C15B	CAP. 100PF, 5KV, N750	0290440009
C16A	CAP. 100PF, 5KV, N750	0290440009
C16B	CAP. 100PF, 5KV, N750	0290440009
C16C	CAP. 100PF, 5KV, N750	0290440009
C16D	CAP. 100PF, 5KV, N750	0290440009
C17	CAP. 75PF, 7.5KV, N750	0290560004
C40	CAP. 0.1μF, 50V, X7R, 20%	0281610002
C41	CAP. 0.1μF, 50V, X7R, 20%	0281610002
C42	CAP. 0.1μF, 50V, X7R, 20%	0281610002
C43	CAP. 0.1μF, 50V, X7R, 20%	0281610002
C44	CAP. 0.1μF, 50V, X7R, 20%	0281610002
C45	CAP. 0.1μF, 50V, X7R, 20%	0281610002
K23	RELAY, REED, HV, 24V, 1 FORM A	1005920001
K24	RELAY, REED, HV, 24V, 1 FORM A	1005920001
K25	RELAY, REED, HV, 24V, 1 FORM A	1005920001
K26	RELAY, REED, HV, 24V, 1 FORM A	1005920001
K27	RELAY, REED, HV, 24V, 1 FORM A	1005920001
K28	RELAY, REED, HV, 24V, 1 FORM A	1005920001
K29	RELAY, REED, HV, 24V, 1 FORM A	1005920001
L11	INDUCTOR,10.85μH	8080061106

PC ASSY, OUTPUT BOARD

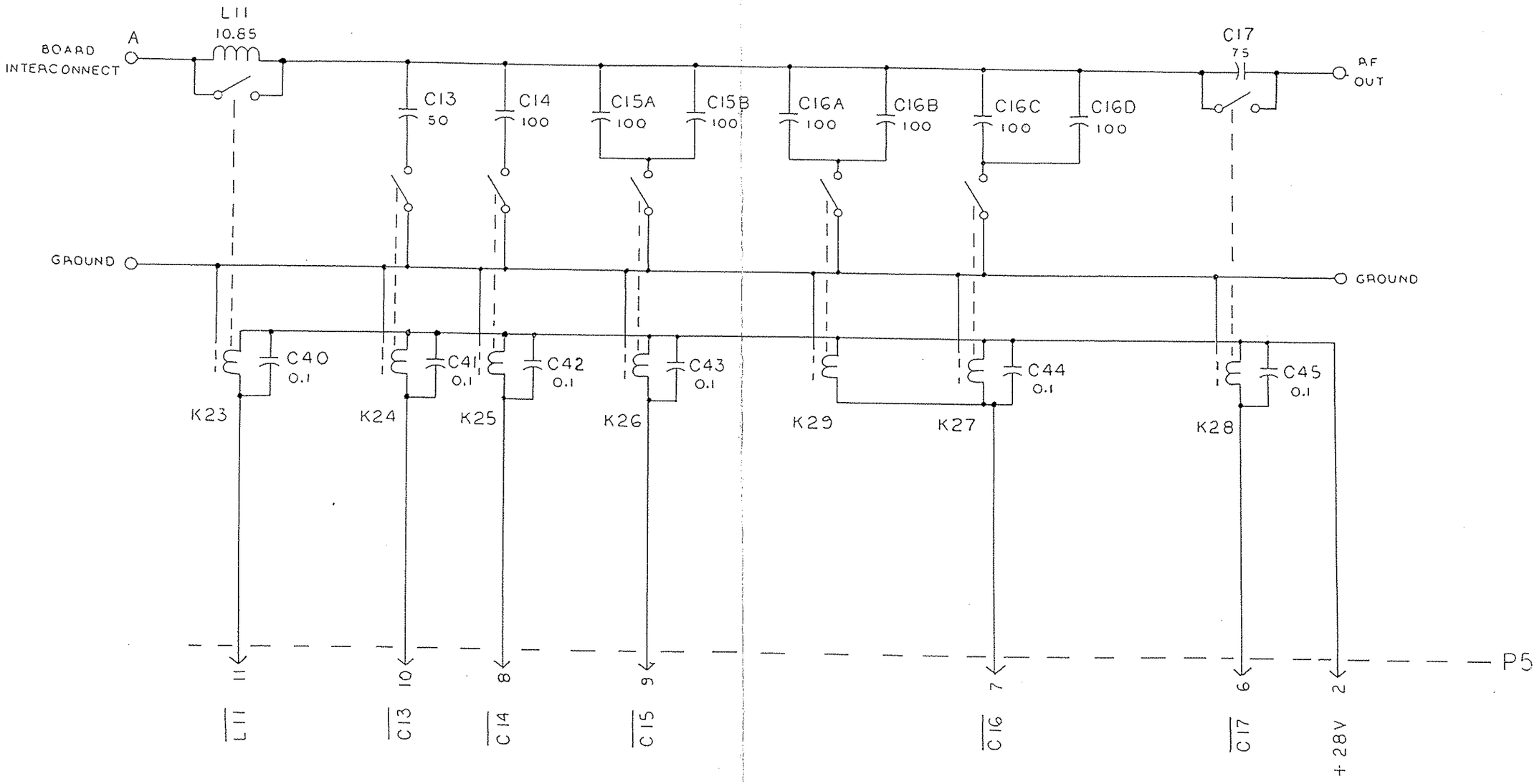

NOTES: UNLESS OTHERWISE SPECIFIED:

1. DECIMAL CAPACITORS ARE IN MICROFARADS, ALL OTHERS ARE IN PICOFARADS.
2. ALL INDUCTORS ARE IN MICROHENRIES.

Output Board **Schematic**

	COMPUTER MODULE	8099324099
C1	CAP. 0.1μF, 50V, X7R, 20%	0281610002
C2	CAP. .01μF, 50V, X7R 20%	0281730008
C3	CAP. 0.1μF, 50V, X7R, 20%	0281610002
C4	CAP. .01μF, 50V, X7R 20%	0281730008
C6	CAP. 0.1μF, 50V, X7R, 20%	0281610002
C7	CAP. 0.1μF, 50V, X7R, 20%	0281610002
C8	CAP. 0.1μF, 50V, X7R, 20%	0281610002
C9	CAP. 0.1μF, 50V, X7R, 20%	0281610002
C11	CAP. .01μF, 50V, X7R 20%	0281730008
C12	CAP. .01μF, 50V, X7R 20%	0281730008
C13	CAP. 0.1μF, 50V, X7R, 20%	0281610002
C14	CAP. 0.1μF, 50V, X7R, 20%	0281610002
C15	CAP. 0.1μF, 50V, X7R, 20%	0281610002
C16	CAP. 0.1μF, 50V, X7R, 20%	0281610002
C17	CAP. 0.1μF, 50V, X7R, 20%	0281610002
C18	CAP. 0.1μF, 50V, X7R, 20%	0281610002
C19	CAP. 0.1μF, 50V, X7R, 20%	0281610002
C20	CAP. 0.1μF, 50V, X7R, 20%	0281610002
C21	CAP. 0.1μF, 50V, X7R, 20%	0281610002
C22	CAP. 0.1μF, 50V, X7R, 20%	0281610002
C23	CAP. .47μF, 50V, X7R 20%	0283377771
C24	CAP. 6.8μF, 25V 20%	1005050031
C25	CAP. .47μF, 50V, X7R 20%	0283377771
C26	CAP. .47μF, 50V, X7R 20%	0283377771
C27	CAP. .47μF, 50V, X7R 20%	0283377771
C28	CAP. .01μF, 50V, X7R 20%	0281730008
C29	CAP. .01μF, 50V, X7R 20%	0281730008
C30	CAP. 0.1μF, 50V, X7R, 20%	0281610002
C31	CAP. 0.001μF, 100V, X7R, 20%	0281630003
C32	CAP. 0.001μF, 100V, X7R, 20%	0281630003
C33	CAP. 0.001μF, 100V, X7R, 20%	0281630003
C34	CAP. 0.001μF, 100V, X7R, 20%	0281630003
C35	CAP. 0.001μF, 100V, X7R, 20%	0281630003
C36	CAP. 0.1μF, 50V, X7R, 20%	0281610002
C37	CAP. 0.1μF, 50V, X7R, 20%	0281610002
C38	CAP. 0.1μF, 50V, X7R, 20%	0281610002
C40	CAP. 0.1μF, 50V, X7R, 20%	0281610002
C41	CAP. 0.1μF, 50V, X7R, 20%	0281610002
C42	CAP. 0.1μF, 50V, X7R, 20%	0281610002
C43	CAP. 0.1μF, 50V, X7R, 20%	0281610002
C44	CAP. 0.1μF, 50V, X7R, 20%	0281610002
C45	CAP. 0.1μF, 50V, X7R, 20%	0281610002
C46	CAP. 0.1μF, 50V, X7R, 20%	0281610002
C47	CAP. 0.1μF, 50V, X7R, 20%	0281610002
C48	CAP. 0.1μF, 50V, X7R, 20%	0281610002
C49	CAP. 0.1μF, 50V, X7R, 20%	0281610002
C50	CAP. 0.1μF, 50V, X7R, 20%	0281610002
C51	CAP. 0.1μF, 50V, X7R, 20%	0281610002
C52	CAP. 0.1μF, 50V, X7R, 20%	0281610002
C53	CAP. 0.1μF, 50V, X7R, 20%	0281610002
C54	CAP. 0.1μF, 50V, X7R, 20%	0281610002
C55	CAP. 0.1μF, 50V, X7R, 20%	0281610002
C89	CAP. 1μF, 50V, 198D	0280910002
C90	CAP. 0.001μF, 100V, X7R, 20%	0281630003
C91	CAP. 0.001μF, 100V, X7R, 20%	0281630003
C93	CAP. .01μF, 50V, X7R 20%	0281730008
C94	CAP. .47μF, 50V Z5U	1006680039
C95	CAP. .47μF, 50V Z5U	1006680039
C96	CAP. .47μF, 50V Z5U	1006680039
C97	CAP. .47μF, 50V Z5U	1006680039
C98	CAP. .47μF, 50V Z5U	1006680039
C99	CAP. 0.1μF, 50V, X7R, 20%	0281610002
C100A	CAP. 220μF, 16V	1004290021
C100B	CAP. 220μF, 16V	1004290021
C101	CAP. 6.8μF, 25V 20%	1005050031
C102	CAP. .01μF, 50V, X7R 20%	0281730008
C103	CAP. .01μF, 50V, X7R 20%	0281730008
C104	CAP. 1μF, 50V, 198D	0280910002
C105	CAP. 1μF, 50V, 198D	0280910002
C106	CAP. 0.1μF, 50V, X7R, 20%	0281610002
C107	CAP. 0.1μF, 50V, X7R, 20%	0281610002
C108	CAP. .01μF, 50V, X7R 20%	0281730008
C109	CAP. .01μF, 50V, X7R 20%	0281730008
C110	CAP. 0.1μF, 50V, X7R, 20%	0281610002
C111	CAP. .01μF, 50V, X7R 20%	0281730008
CP1	CAPACITOR, NTWK, 10 PIN, .1 μF	1006580018
CP2	CAP. NTWK, 8 PIN, .1μF	1007360003
CP3	CAP. NTWK, 8 PIN, .1μF	1007360003
CP4	CAP. NTWK, 8 PIN, .1μF	1007360003
CP5	CAP. NTWK, 8 PIN, .1μF	1007360003
CR1	DIODE, RECTIFIER 1N4004	0405180004
CR2	DIODE, RECTIFIER 1N4004	0405180004
CR3	DIODE, RECTIFIER 1N4004	0405180004
CR4	DIODE, RECTIFIER 1N4004	0405180004
CR5	DIODE, RECTIFIER 1N4004	0405180004
CR6	DIODE, RECTIFIER 1N4004	0405180004
CR7	DIODE, RECTIFIER 1N4004	0405180004
CR8	DIODE, HCT CARRIER 5082-2835	0405280009
CR9	DIODE, RECTIFIER 1N4004	0405180004
CR10	DIODE, ZENER 1N5343B	1003060005
CR11	DIODE, ZENER 1N5245B	0405210001
CR12	DIODE, SIGNAL, SIL. 1N4454	0405270003
CR13	DIODE, SIGNAL, SIL. 1N4454	0405270003
CR14	DIODE, ZENER IN5228B	1004320027
CR15	DIODE, RECTIFIER 1N4004	0405180004
CR16	DIODE, HOT CARRIER 1N6263	0405610009
CR17	DIODE, HOT CARRIER 1N6263	0405610009
CR18	DIODE, SIGNAL, SIL. 1N4454	0405270003
CR19	DIODE, SIGNAL, SIL. 1N4454	0405270003
L1	INDUCTOR, MOLDED, 22μH, 10%	0664060005
L2	INDUCTOR, MOLDED, 22μH, 10%	0664060005
L3	INDUCTOR, MOLDED, 22μH, 10%	0664060005
L4	INDUCTOR, MOLDED, 22μH, 10%	0664060005
L5	INDUCTOR, MOLDED, 22μH, 10%	0664060005
L6	INDUCTOR, MOLDED, 22μH, 10%	0664060005
L7	INDUCTOR, MOLDED, 22μH, 10%	0664060005
L8	INDUCTOR, MOLDED, 22μH, 10%	0664060005
Q1	TRANSISTOR, NPN, SI. 2N2222A	0448580004
Q2	TRANSISTOR, NPN, SI. 2N4124	0448010003
Q3	TRANSISTOR, PNP, SI 2N4126	0448020009
Q4	TRANSISTOR, N-CH, FET 3N170	1003980015
Q5	TRANSISTOR, P-CH, FET 2N5461	0446160008
R1	RESISTOR 6.8K, 5%, 1/4W	0174810008
R2	RESISTOR 6.8K, 5%, 1/4W	0174810008
R3	RESISTOR 100, 5%, 1/4W	0171180003
R4	RESISTOR 2.2K, 5%, 1/4W	0178070009
R5	RESISTOR 10K, 1%, 1/8W	1003050026
R6	POT. 5K, 10% 3/4W, 15 TURNS	0338490086
R7	RESISTOR 10K, 1%, 1/8W	1003050026
R8	RESISTOR 4.7K, 5%, 1/4W	0170770001
R9	RESISTOR 100K, 10%, 1/4W	0170390004
R10	RESISTOR 4.7K, 5%, 1/4W	0170770001
R11	RESISTOR 100K, 10%, 1/4W	0170390004
R12	RESISTOR 22M, 10%, 1/4W	0180950002
R13	RESISTOR 22M, 10%, 1/4W	0180950002
R14	RESISTOR 6.8K, 5%, 1/4W	0174810008
R15	RESISTOR 6.8K, 5%, 1/4W	0174810008
R16	RESISTOR 100, 5%, 1/4W	0171180003
R17	RESISTOR 2.2K, 5%, 1/4W	0178070009
R18	RESISTOR 10K, 1%, 1/8W	1003050026
R19	POT. 5K, 10% 3/4W, 15 TURNS	0338490086
R20	RESISTOR 10K, 1%, 1/8W	1003050026
R21	RESISTOR 4.7K, 5%, 1/4W	0170770001
R22	RESISTOR 100K, 10%, 1/4W	0170390004
R23	RESISTOR 4.7K, 5%, 1/4W	0170770001
R24	RESISTOR 100K, 10%, 1/4W	0170390004
R25	RESISTOR 22M, 10%, 1/4W	0180950002
R26	RESISTOR 22M, 10%, 1/4W	0180950002
R28	RESISTOR 330, 5%, 1/4W	0170910008
R29	POT. 500, 10% 1/2W, 4 TURNS	0197510019
R30	RESISTOR 560, 5%, 1/4W	0183200004
R31	RESISTOR 80.6, 1%, 1/8W	0195200004
R32	RESISTOR,8.45K 1%, 1/8W	1005900001
R33	RESISTOR 604, 1%, 1/8W	0193980002
R34	RESISTOR 6.8K, 5%, 1/4W	0174810008
R35	RESISTOR 22K, 5%, 1/4W	0172230004
R36	RESISTOR 10, 5%, 1/4W	0177160004
R37	RESISTOR 1K, 10%, 1/4W	0171560001
R38	RESISTOR 1K, 10%, 1/4W	0171560001
R40	RESISTOR 1K, 10%, 1/4W	0171560001
R41	RESISTOR 47K, 10%, 1/4W	0171060008
R42	RESISTOR 22K, 5%, 1/4W	0172230004
R43	POT. 100K, 10% 3/4W, 15 TURNS	0338490051
R44	RESISTOR 15K, 5%, 1/4W	0172350000
R45	RESISTOR 15K, 5%, 1/4W	0172350000
R46	RESISTOR 2.2M, 10%, 1/4W	0176870008
R47	RESISTOR 4.7K, 5%, 1/4W	0170770001
R48	RESISTOR 220K, 10%, 1/4W	0177780002
R49	RESISTOR,8.45K 1%, 1/8W	1005900001
R50	RESISTOR 470, 5%, 1/4W	0184110009
R51	RESISTOR 1K, 10%, 1/4W	0171560001
R52	RESISTOR 3.9K, 10%, 1/4W	0178830003
R53	RESISTOR 4.7K, 5%, 1/4W	0170770001
R54	RESISTOR 1K, 10%, 1/4W	0171560001
R55	RESISTOR 3.9K, 10%, 1/4W	0178830003
R57	RESISTOR 8.2K, 5%, 1/4W	0181620006
R58	RESISTOR 15K, 5%, 1/4W	0172350000
R59	RESISTOR 470, 5%, 1/4W	0184110009
R60	RESISTOR 39K, 10%, 1/4W	0177800003
R61	POT. 1K, 10% 3/4W, 15 TURNS	0338490019
R62	RESISTOR 100K, 10%, 1/4W	0170390004
R63	RESISTOR 100K, 10%, 1/4W	0170390004
R64	RESISTOR 39K, 10%, 1/4W	0177800003
R65	RESISTOR 100K, 10%, 1/4W	0170390004
R66	POT. 1K, 10% 3/4W, 15 TURNS	0338490019
R67	RESISTOR 10K, 10%, 1/4W	0170410005
R68	RESISTOR 100K, 10%, 1/4W	0170390004
R69	RESISTOR 39K, 10%, 1/4W	0177800003
R70	RESISTOR 470, 5%, 1/4W	0184110009
R71	RESISTOR 15K, 5%, 1/4W	0172350000
R72	RESISTOR 15K, 5%, 1/4W	0172350000
R73	RESISTOR 4.7K, 5%, 1/4W	0170770001
RP1	RES NTWK 6 PIN SIP 10K COM	1006130004
RP2	RES NTWK 6 PIN SIP 1.8K COM	1006520031
RP3	RES NTWK 10 PIN SIP 10K COM	1006130021
TP1	VERTICAL JACK, WHITE	1006200029
TP2	VERTICAL JACK, WHITE	1006200029
TP3	VERTICAL JACK, WHITE	1006200029
TP4	VERTICAL JACK, WHITE	1006200029
TP5	VERTICAL JACK, WHITE	1006200029
TP6	VERTICAL JACK, WHITE	1006200029
TP7	VERTICAL JACK, WHITE	1006200029
U1	IC. DIGITAL 80C85A	1007400013
U2	IC. DIGITAL 54LS138	1006410015
U3	IC. DIGITAL 54LS373	1006410023
U5	IC. DIGITAL 81C55	1007390026
U6	IC. DIGITAL 54LS374	1006420011
U7	IC. DIGITAL 54LS374	1006420011
U8	IC. DIGITAL 54LS32	1006420029
U9	IC. LINEAR ULS2003R	1007410019
U10	IC. LINEAR ULS2003R	1007410019
U11	IC. LINEAR ULS2003R	1007410019
U12	IC. LINEAR ULS2003R	1007410019
U13	IC. LINEAR ULS2003R	1007410019
U14	IC. DIGITAL RAM UPD446D	1006430008
U15	IC. DIGITAL 54LS374	1006420011
U16	IC. DIGITAL 54LS244	1006510028
U17	IC. LINEAR UA747ADMQB	1006430024
U18	IC. LINEAR LM239AJ	1006430032
U19	IC. LINEAR LM239AJ	1006430032
U20	IC. DIGITAL 4584B	1005190011
U21	IC. LINEAR LM117	1006440011
U22	IC. LINEAR LM117	1006440011
U23	CRYSTAL, OSCILLATOR, 1.00 MHZ	1006670025
U24	IC. DIGITAL 74HC14	1006490027
U25	IC. DIGITAL 74HC374	1006450033
U26	IC.DIGITAL 74HC688	1009050001
U27	IC, DIGITAL 74HC132	1007360020
XU1	SOCKET, IC, 40 PIN TAILLESS	1006620010
XU4	SOCKET, IC, 24 PIN	1006240021
XU5	SOCKET, IC, 40 PIN TAILLESS	1006620010
	EPROM, W/ACU-810A SOFTWARE	8099324595
	MOUNTING PAD, TRANSISTOR	0502710004
	SHIELD, COMPONENT, CPU DCU-150	8080025801

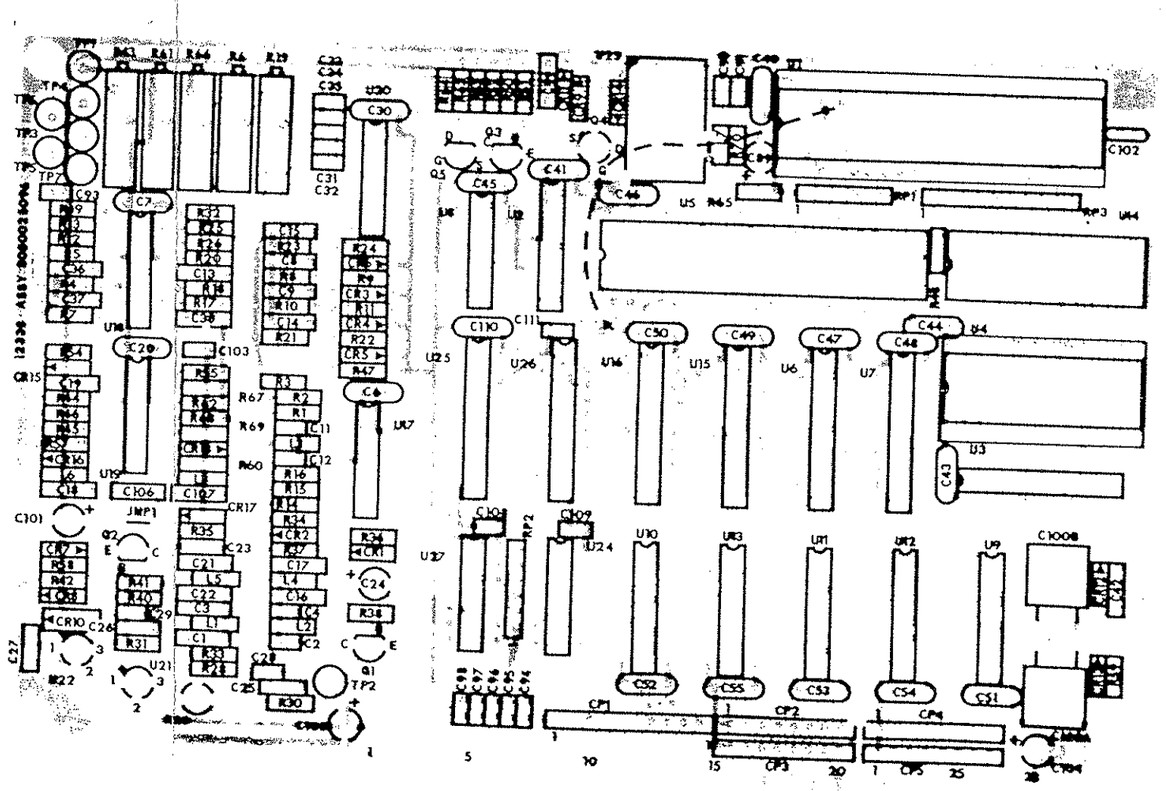

COMPUTER MODULE

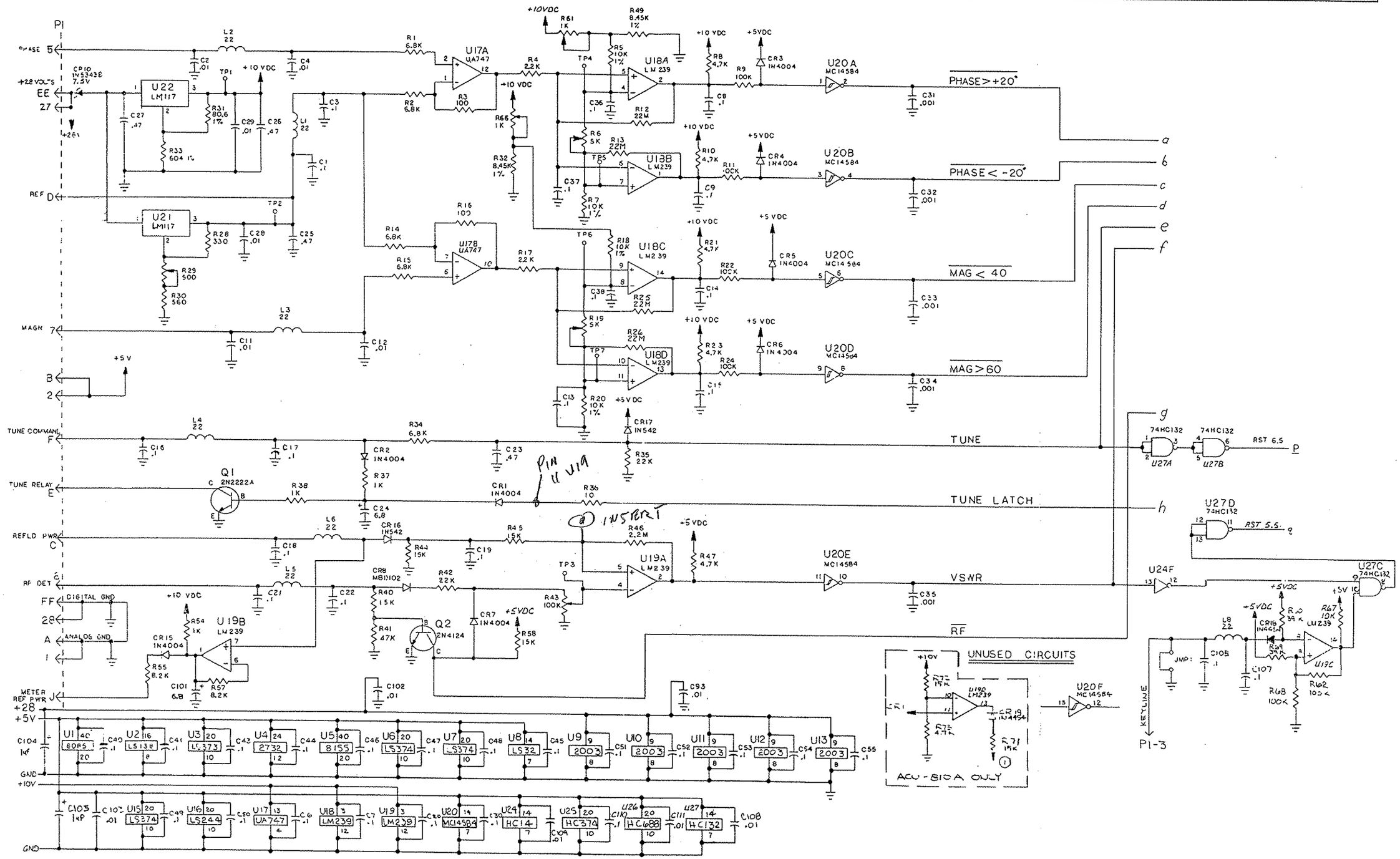

Computer Board Schematic

Computer Board

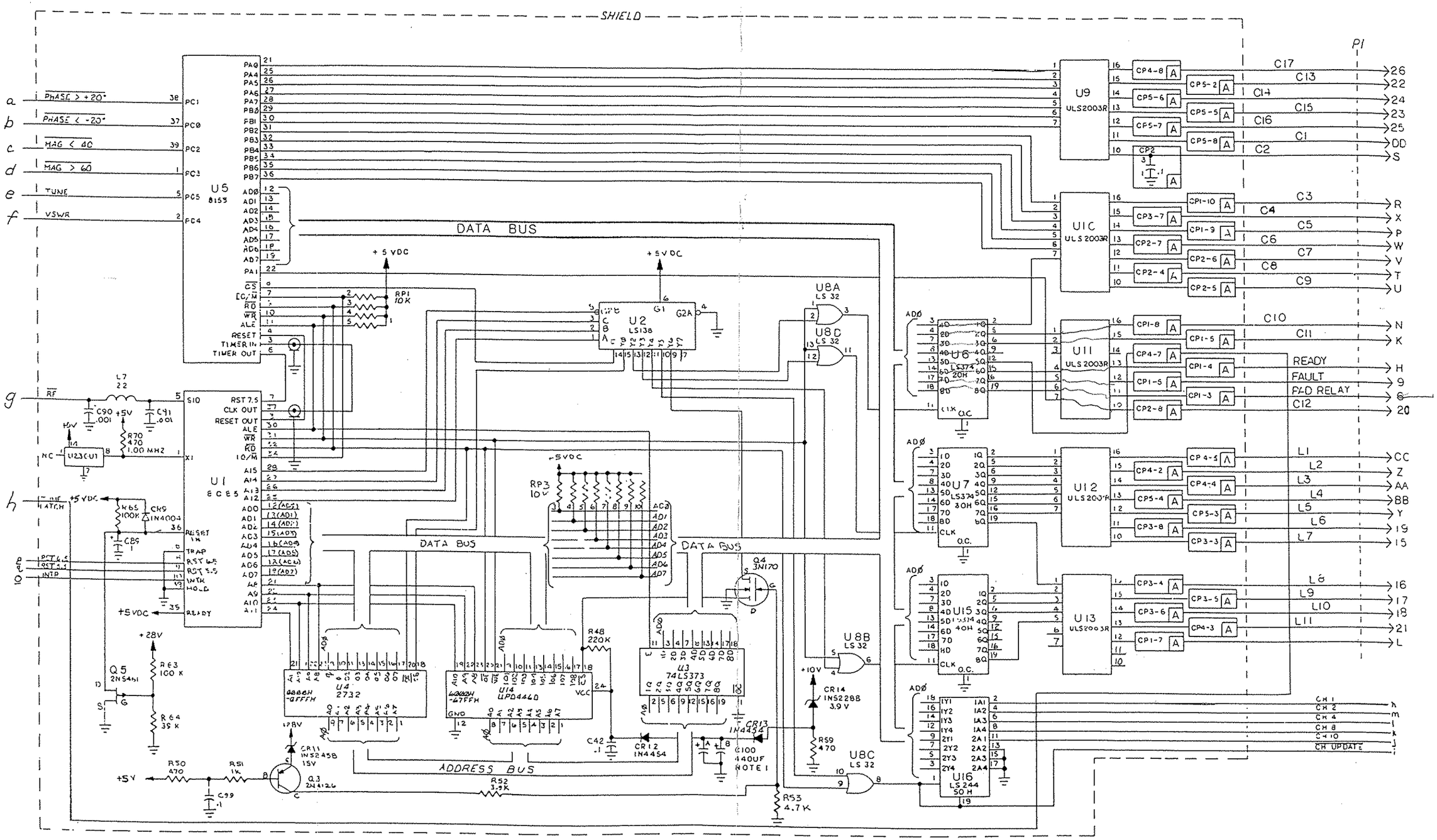

Computer Board Schematic

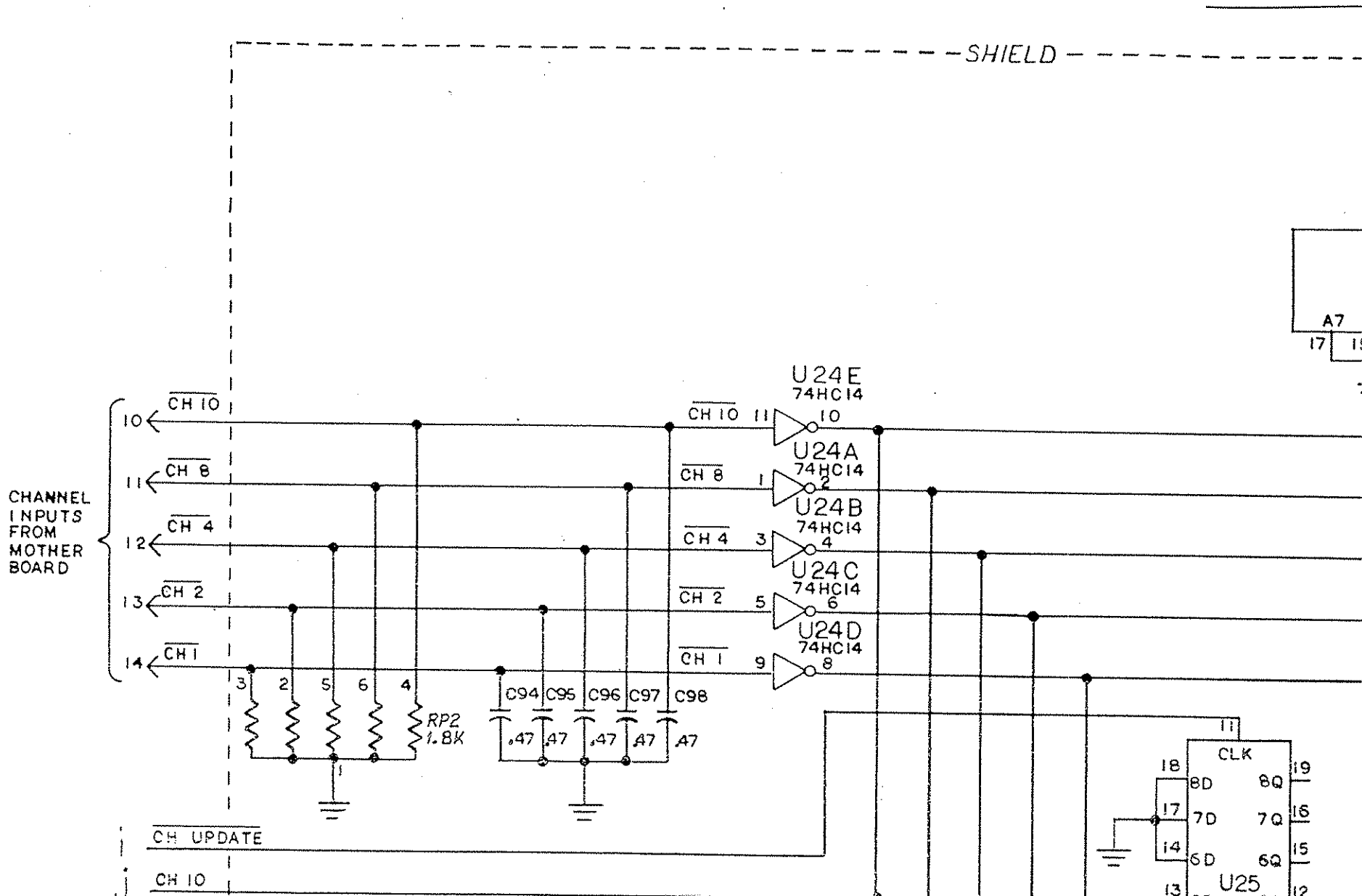
SHIELD
CHANNEL INPUTS FROM MOTHER BOARD
CH 10
CH 8
CH 4
CH 2
CH 1
U24E 74HC14
U24A 74HC14
U24B 74HC14
U24C 74HC14
U24D 74HC14
RP2 1.8K
C94 C95 C96 C97 C98
.47
CH UPDATE
CH 10
A7
CLK
8D 7D 6D
8Q 7Q 6Q
U25

	PC ASSY, DETECTOR/PAD	8056160094
C2	CAP. 5.5-18PF, 350V, NPO	1007160021
C3	CAP. 390PF, 500V, DM15, 5%	0286000008
C4	CAP. .01µF, 50V, X7R 20%	0281730008
C5	CAP. .01µF, 50V, X7R 20%	0281730008
C6	CAP. .01µF, 50V, X7R 20%	0281730008
C7	CAP. 0.1µF, 50V, X7R, 20%	0281610002
C8	CAP. 0.1µF, 50V, X7R, 20%	0281610002
C9	CAP. .47µF, 50V, X7R 20%	0283377771
C10	CAP. .01µF, 50V, X7R 20%	0281730008
C11	CAP. .01µF, 50V, X7R 20%	0281730008
C12	CAP. .01µF, 50V, X7R 20%	0281730008
C12	POT. 10K, 5% 0.6W, 15 TURNS	0344410005
C13	CAP. 12PF, 500V, DM15	1005320039
C14	CAP. 2-8PF, 350V, NPO	0268220000
C15	CAP. 91PF, 500V, DM15, 5%	0298740001
C16	CAP. .01UF, 50V, X7R 20%	0281730008
C17	CAP. 91PF, 500V, DM15, 5%	0298740001
C18	CAP. .01UF, 50V, X7R 20%	0281730008
C19	CAP. 2-8PF, 350V, NPO	0268220000
C20	CAP. 33PF, 500V, DM15, 2%	0281020001
CR1	DIODE, RECTIFIER 1N4004	0405180004
CR2	DIODE, HOT CARRIER 1N6263	0405610009
CR3	DIODE, HOT CARRIER 1N6263	0405610009
CR4	DIODE, HOT CARRIER 1N6263	0405610009
CR5	DIODE, HOT CARRIER 1N6263	0405610009
CR6	DIODE, HOT CARRIER 1N6263	0405610009
CR7	DIODE, HOT CARRIER 1N6263	0405610009
CR8	DIODE, RECTIFIER 1N4004	0405180004
J1	CONNECTOR, RF, SNAP-ON	1000170012
K1	RELAY, 4PDT, 24V, PC MT 7.5A	0661600009
K2	RELAY, 4PDT, 24V, PC MT 7.5A	0661600009
L1	INDUCTOR, MOLDED, 0.47µH, 5%	0649410009
L2	INDUCTOR, MOLDED, 1000µH, 10%	0664940005
L3	INDUCTOR, MOLDED, 1000µH, 10%	0664940005
L4	INDUCTOR, MOLDED, 1000µH, 10%	0664940005
L5	INDUCTOR, MOLDED, 1000µH, 10%	0664940005
L6	INDUCTOR, MOLDED, 1000µH, 10%	0664940005
L7	INDUCTOR, MOLDED, 1000µH, 10%	0664940005
L8	INDUCTOR, MOLDED, 1000µH, 10%	0664940005
R7	RESISTOR 12K, 10%, 1/4W	0183180003
R8	RESISTOR 18, 5%, 1/2W	0184730007

	INSULATION SHEET ACU-810	1002650011
	PC ASSY, PAD DCU-100	8056161091
	SOCKET, RELAY, 4PDT CONTACTS	0754700003
	SOCKET PIN	1005990034
	SPRING, RELAY HOLD-DOWN	0881930008

	PC ASSY, PAD	8056161091
R1	RESISTOR 50, 5%, 14W	0191160008
R2	RESISTOR 50, 5%, 14W	0191160008
R3	RESISTOR 50, 5%, 14W	0191160008
R4	RESISTOR 50, 5%, 14W	0191160008
R5	RESISTOR 200, 5%, 14W	0197410006
R6	RESISTOR 200, 5%, 14W	0197410006

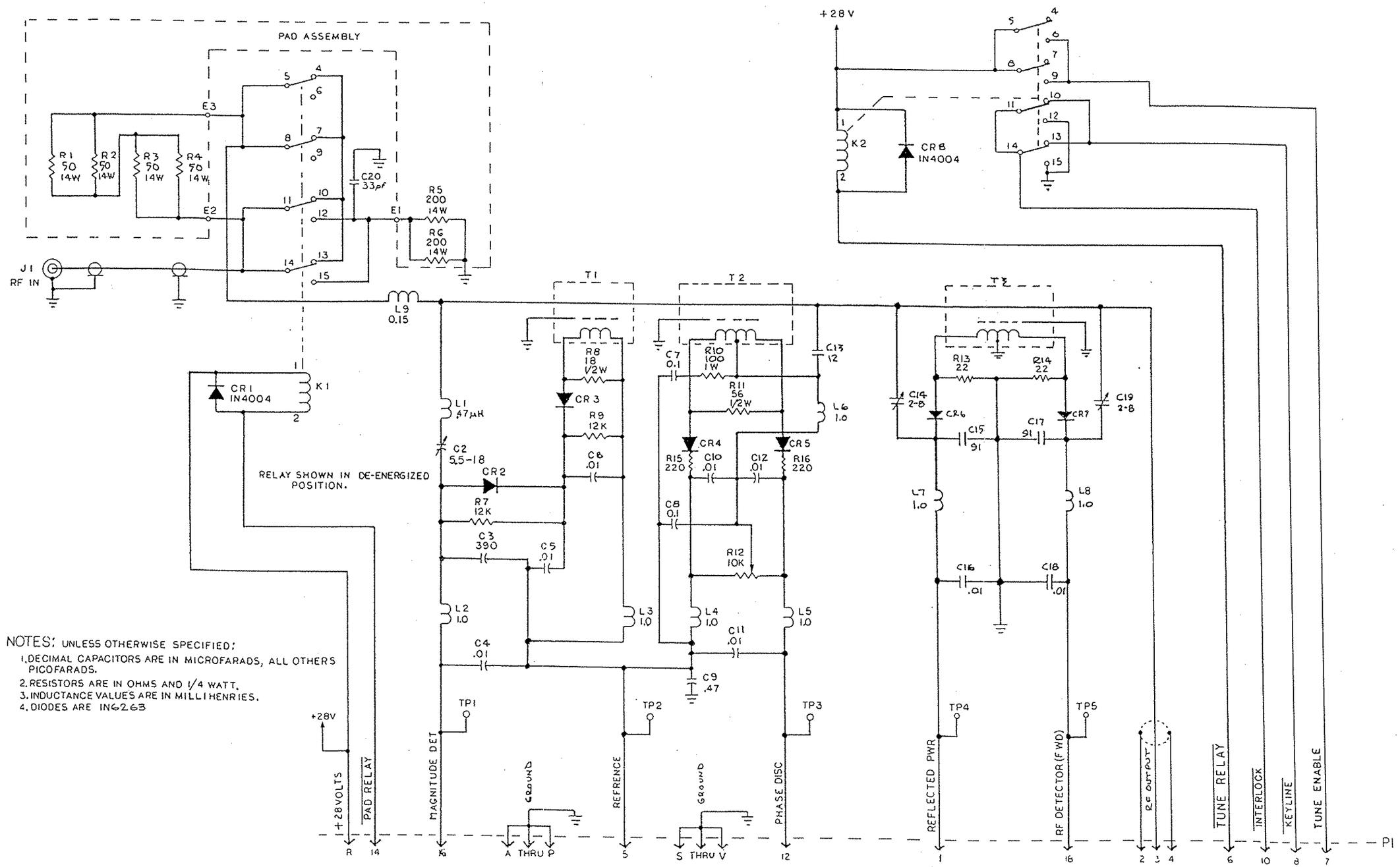

NOTES: UNLESS OTHERWISE SPECIFIED:

1. DECIMAL CAPACITORS ARE IN MICROFARADS, ALL OTHERS PICOFARADS.
2. RESISTORS ARE IN OHMS AND 1/4 WATT.
3. INDUCTANCE VALUES ARE IN MILLIHENRIES.
4. DIODES ARE IN6263

Detector Board Assembly Schematic

THIS PAGE INTENTIONALLY LEFT BLANK.