sunair electronics, inc.
3101 S.W. 3rd Avenue, Fort Lauderdale, Florida 33315-3389 USA

OPERATION AND MAINTENANCE MANUAL

ARU-904

AUTOMATIC RETRANSMISSION UNIT

FEDERAL HIGHWAY ADMINISTRATION
EDITION 1 FEBRUARY 1985
MANUAL PART NUMBER TM-9187040191

TRAINING PROGRAMS

Sunair offers Training Programs of varying lengths to cover operation, service, and maintenance of all Sunair manufactured equipment. Up to eight technicians can be accomodated in these programs.

For more information, contact:

Product Support/Training Director
Sunair Electronics, Inc.
3101 S. W. Third Avenue
Fort Lauderdale, Florida 33315 USA

Telephone: (305) 525-1505
Telex: 51-4443
Cable: Sunair FTL

TABLE OF CONTENTS

SECTION		PAGE
I	GENERAL INFORMATION	
1.1	Scope	1-1
1.2	General	1-1
1.3	Technical Specifications	1-1
1.4	Equipment Supplied	1-1
II	INSTALLATION	
2.1	General	2-1
2.2	Unpacking and Inspection	2-1
2.3	Reshipping	2-1
2.4	General Installation and Mounting Information	2-2
III	OPERATION	
3.1	General	3-1
3.2	Operating Controls and Indicators	3-1
3.3	Rear Apron Connections	3-1
3.4	General Operating Instructions	3-1
3.5	HF Data - Preliminary Setup	3-4
3.6	HF Data - Receive	3-4
3.7	HF Data - Transmit	3-4
3.8	Telephone Data-Preliminary	3-4
3.9	HF/VHF Retransmit - Preliminary	3-5
IV	THEORY OF OPERATION	
4.1	General	4-1
4.2	Overall Block Diagram	4-1
4.3	Chassis Assembly - 1A1	4-1
4.4	Front Panel Assembly - 1A2	4-1
4.5	Audio Board Assembly - 1A3	4-1
4.6	Teletype Interface - 1A4	4-5
V	MAINTENANCE AND REPAIR	
5.1	General	5-1
5.2	Disassembly	5-1
5.3	ARU-904 Alignment - Audio Board 1A3	5-1
5.4	Voltage Checks	5-2
5.5	Fault Analysis	5-6

LIST OF ILLUSTRATIONS

FIGURE		PAGE
1-1	ARU-904 Automatic Retransmission Unit	1-2
2-1	ARU-904 Outline Configuration	2-5
2-2	ARU-904, MPC-1000CR, Telephone Modem, HF Transceiver System Configuration	2-6
2-3	Cable Assembly, ARU-904/MPC-1000CR	2-7
2-4	Cable Assembly, AUX ARU-904	2-8
2-5	Cable Assembly, Power	2-9
3-1	ARU-904 Operating Controls and Indicators	3-2
3-2	ARU-904 Rear Apron Connections	3-3
4-1	Overall Block Diagram, ARU-904	4-3
4-2	Block Diagram, Audio Board 1A3	4-4
5-1	Component Locations	5-3
5-2	Chassis Wiring 1A1 Schematic	5-9
5-3	Front Panel 1A2 Schematic	5-11
5-4	Audio Board 1A3 Schematic	5-13
5-5	Teletype Interface 1A4 Schematic	5-17

SECTION I

GENERAL INFORMATION

1.1 SCOPE

This instruction manual contains installation details, operating instructions, theory of operation, maintenance and repair procedures for the ARU-904.

1.2 GENERAL

Refer to Figure 1-1.

The ARU-904 is an Automatic Retransmission Unit providing the facilities for the retransmission of HF voice over a VHF Transceiver or VHF voice over an HF Transceiver.

Operation of the ARU-904 is fully automatic upon switching the Auxiliary Selector Switch to the VHF Transceiver (Auxiliary 1 or 2). Light emitting diodes (LEDs) indicate which audio path is in use, transmit or receive, and which transceiver is keyed, HF or VHF.

The ARU-904 also contains a RS-232 switch facility for connecting a Model 43 Teleprinter to a Telephone-Computer Modem or an HF RTTY Modem.

1.3 TECHNICAL SPECIFICATIONS

1.3.1 GENERAL

ENVIRONMENTAL: -30°C to +50°C

HUMIDITY: 100% at 50°C

VIBRATION: Per MIL-STD-810B, Method 514.1, Procedure VIII, Curve V

SHOCK: Per MIL-STD-810B, Method 516.1, Procedure I, Figure 516.1.2, Amplitude A Duration C

ENCLOSURE: Per MIL-STD-108, Table 11. (Splashproof)

DIMENSIONS: 16.12"W x 2.44"H x 10.50"D

WEIGHT: 5 LBS 9 OZS

COLOR: Grey

1.3.2 ELECTRICAL

AUDIO INPUT HF TRANSCEIVER: 600 ohms unbalanced, +10 DBM, 300-3000 Hz

AUDIO INPUT AUXILIARY: 600 ohms balanced, 0 DBM adjustable, 300-3000 Hz

AUDIO OUTPUT HF TRANSCEIVER: 600 ohms unbalanced, 0 DBM adjustable, 300-3000 Hz

AUDIO OUTPUT AUXILIARY: 600 ohms balanced, 0 DBM adjustable, 300-3000 Hz

KEYLINE HF: Transistor, open collector, switch to ground

KEYLINE AUXILIARY: Transistor, open collector, switch to ground

PRIMARY POWER: 28 VDC at 90 ma, 190 ma with RS-232 Selector Switch ON. NOTE: 28 VDC is supplied by the HF Transceiver

1.4 EQUIPMENT SUPPLIED

Cable, Primary Power:	8068002090
Cable, MPC-1000CR:	9187040174
Cable, Auxiliary:	9187040182
Cable, Teleprinter:	See Model 43 Manual
Operation and Maintenance Manual:	9187040191
ARU-904 (Grey):	9187040166

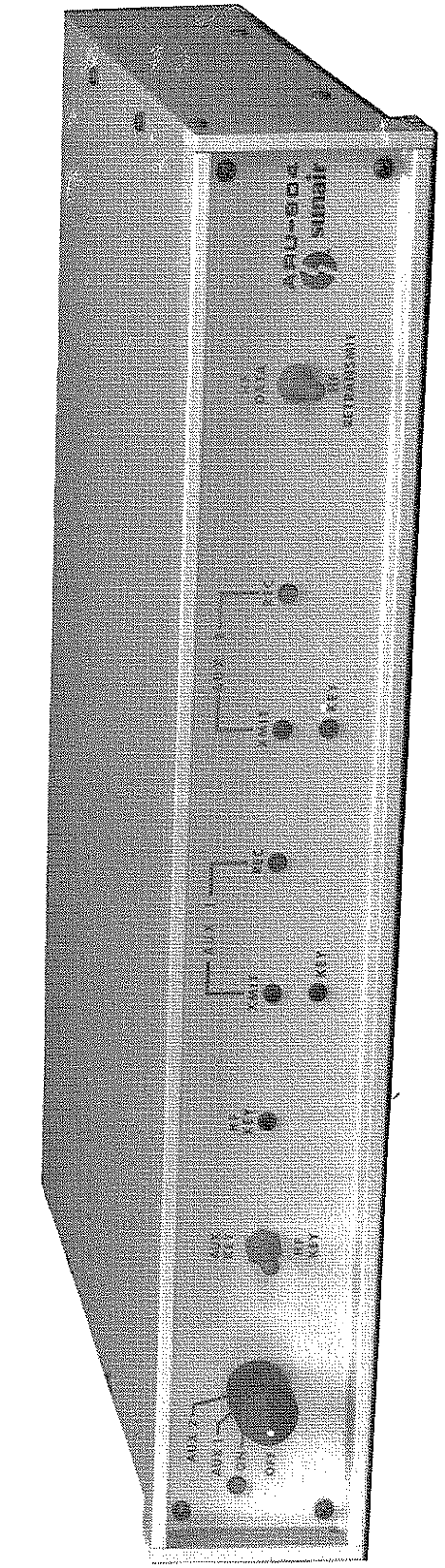

FIGURE 1-1 ARU-904 AUTOMATIC RETRANSMISSION UNIT

CAUTION

TO INSURE THAT CABLE HAS NOT BEEN DAMAGED DURING SHIPMENT, ALL CABLE ASSEMBLIES MUST BE CHECKED FOR CONTINUITY OR SHORTS, FROM PIN TO PIN, BETWEEN CONNECTORS BEFORE INITIAL RADIO OR SYSTEM POWER UP.

WARNING

CONNECTORS INSTALLED BY THE CUSTOMER MUST BE WIRED IN ACCORDANCE WITH INSTALLATION INSTRUCTIONS PROVIDED IN THE OPERATION AND MAINTENANCE MANUAL. THE CABLE MUST BE CONTINUITY CHECKED AFTER INSTALLATION AND PRIOR TO RADIO OR SYSTEM POWER UP.

SECTION II

INSTALLATION

2.1 GENERAL

Section II contains all necessary instructions for the unpacking, inspection, and if necessary, reshipping of damaged equipment or parts. In addition, information regarding system configuration, location mounting considerations and power requirements is also provided.

2.2 UNPACKING AND INSPECTION

Unpack and inspect all parts of the equipment and accessories as soon as received. Check the packing list to be sure you have received all items ordered and that all items necessary for operation have been ordered.

NOTE

Be sure to retain the carton and its associated packing materials should it be necessary to reship damaged equipment.

Do not accept a shipment when there are visible signs of damage to the cartons until a complete inspection is made. If there is a shortage of items or any evidence of damage is noted, insist on a notation to that effect on the shipping papers before signing the receipt from the carrier. If concealed damage is discovered after a shipment has been accepted, notify the carrier immediately in writing and await his inspection before making any disposition of the shipment. A full report of the damage should also be forwarded to Sunair's Product Services Department. Include the following:

a) Order Number
b) Model and serial number
c) Name of transportation agency
d) Applicable dates

When Sunair receives this information, arrangements will be made for repair or replacement.

2.3 RESHIPPING

The shipping carton for the equipment has been carefully designed to protect the equipment and its accessories during shipment. This carton and its associated packing materials should be used to reship the equipment.

If the original shipping carton is not available, be sure to carefully pack each unit separately, using suitable cushioning material where necessary. Very special attention should be given to providing enough packing material around controls, connectors, and other protrusions from the equipment. Rigid cardboard should be placed at the corners of the equipment to protect against denting.

When necessary to return equipment to Sunair for warranty or non-warranty repair, an AUTHORIZATION NUMBER is required. This number can be obtained from the Product Services Department. Telephone: 305-525-1505, Telex: 51-4443, or Cable: SUNAIR.

When returning units or subassemblies or components for repair or replacement, please ship consigned to:

SUNAIR ELECTRONICS, INC.
PRODUCT SERVICES DEPARTMENT
3101 SW 3rd Avenue
Fort Lauderdale, Florida
33315-3389 USA

Plainly mark with indelible ink all mailing documents and be sure to mark all sides of the package as follows.

"FRAGILE - ELECTRONIC EQUIPMENT"

NOTE

Before shipping, carefully inspect the package to be sure it is marked properly and is securely wrapped.

2.4 GENERAL INSTALLATION AND MOUNTING INFORMATION - ARU-904

2.4.1 BASE STATION INSTALLATION

The ARU-904 is equipped with rubber feet so that it can be set directly on a table, desk or similar flat surface.

Minimum clearance of one inch (1") at the rear should be allowed to provide adequate cooling. Figure 2-1 shows the outline configuration for the ARU-904.

2.4.2 SYSTEM CONFIGURATION

Figure 2-2 illustrates the ARU-904, HF Modem - MPC-1000CR, Telephone Modem and HF Transceiver system configuration.

2.4.3 CABLE CONNECTIONS

Refer to Figures 2-3 through 2-5.

2.4.3.1 HF Modem - MPC-1000CR

CONNECTOR	CABLE
a) REMOTE POSITION 3:	green
b) AFSK OUTPUT:	orange and brown
c) AFSK INPUT:	red and grey
d) EIA MS ± 12:	black
e) AUDIO INPUT:	yellow and blue
f) REMOTE POSITION 1:	jumper plug

2.4.3.2 Teleprinter-Model 43

CONNECTOR	CABLE
a) Male DB-25 Connector:	Teleprinter interconnect cable, Female end

2.4.3.3 Retransmission Unit ARU-904

CONNECTOR	CABLE
a) HF XCVR:	Primary power cable
b) TELEPRINTER:	Teleprinter interconnect cable, Male end
c) TELEPHONE MODEM:	Telephone modem interconnect cable
d) HF MODEM:	HF modem interconnect cable
e) AUX 1:	VHF interface cable

2.4.3.4 AUX 1 VHF Interface Cable

PIN	WIRE COLOR	FUNCTION
A	Black	Ground
B	Orange	Audio Out
C	Brown	Audio Out
D	Red	+28 VDC
E	Yellow	Audio In
F	Blue	Audio In
G	Green	Keyline

2.4.3.5 Telephone Modem

a) Connect Telephone Modem to telephone line.

b) Set Telephone Modem condition switches per section 2.4.4.

2.4.4 TELEPHONE MODEM CONDITION SWITCH POSITIONS

a) RNG: OFF

b) 8 HI: ON

c) BAL: OFF

d) DTR: OFF

9187040263

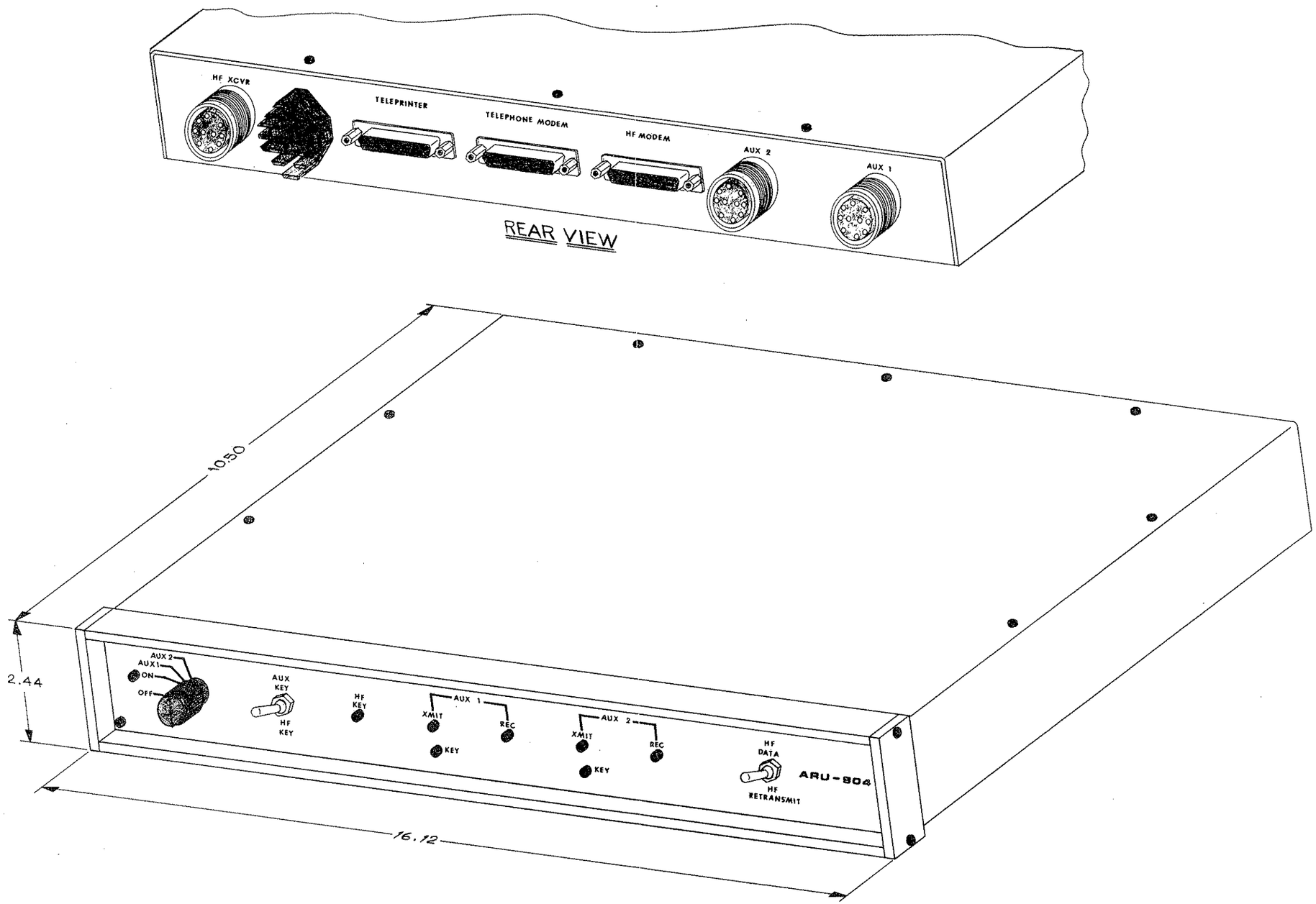

FIGURE 2-1 ARU-904 OUTLINE CONFIGURATION

9187040271

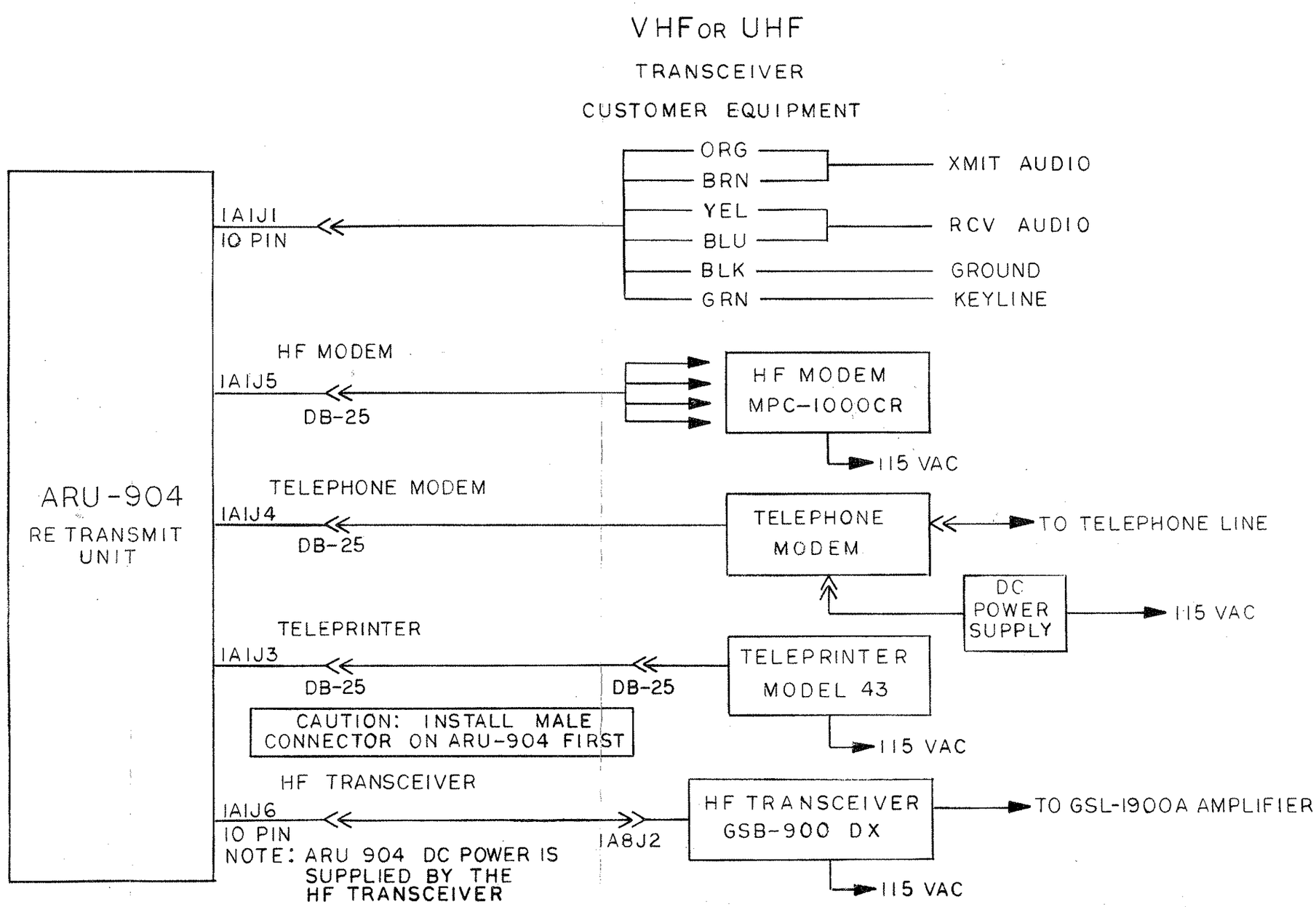

FIGURE 2-2 ARU-904, MPC-1000CR, TELEPHONE MODEM, HF TRANSCEIVER SYSTEM CONFIGURATION

9187040174

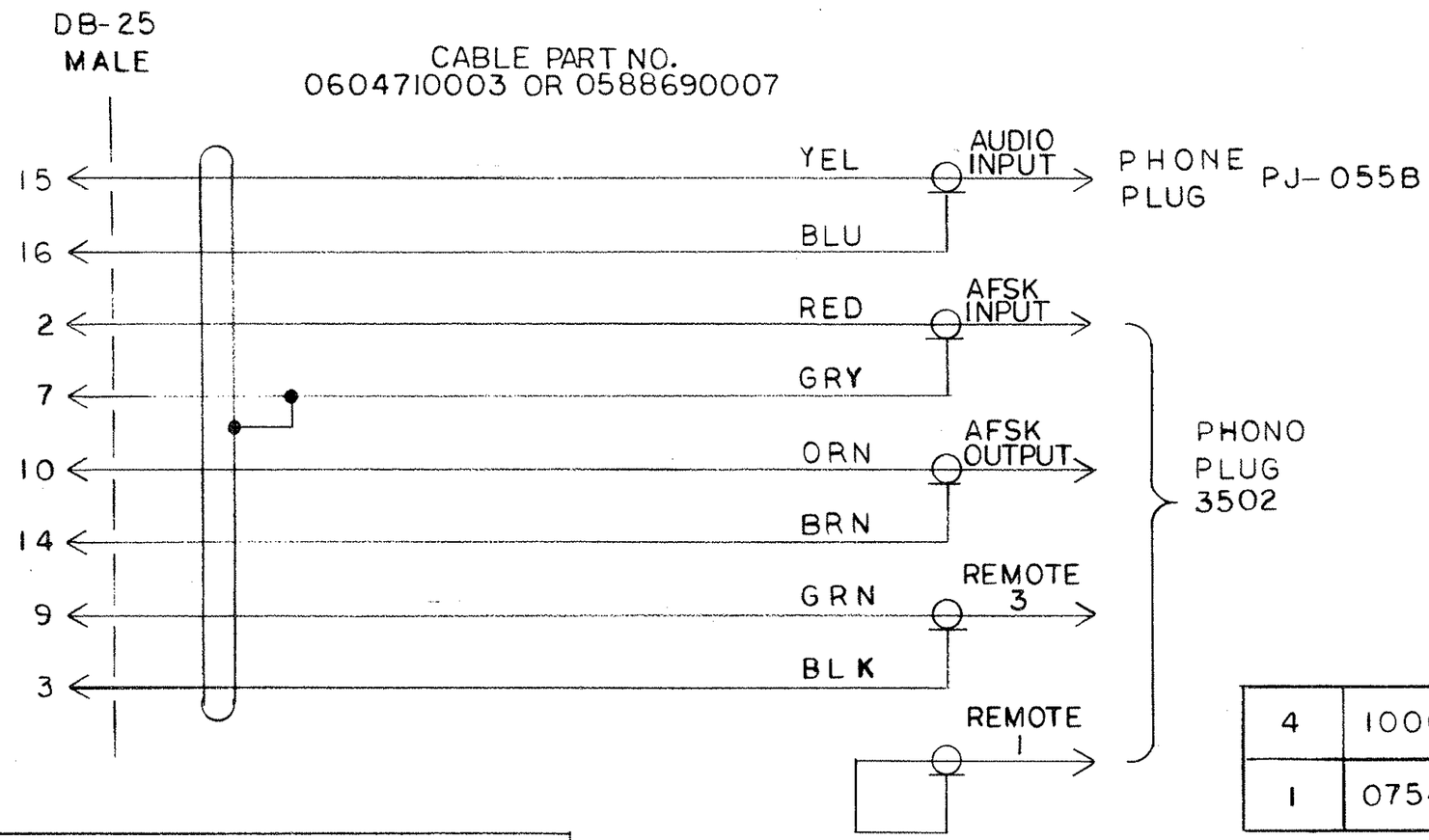

QTY	DB-25 CONNECTOR MALE	
1	0749080001	CONNECTOR
1	0749220007	SCREW LOCK
1	0749100001	HOOD, CONNECTOR

4	1006220011	PHONO PLUG
1	0754010007	CONNECTOR PHONE PLUG

9187040174A CABLE ASSY, ARU-904/MPC-1000CR

Cable, 7 Cond/Pairs No. 24	0604710003
Connector, Phone Plug, 2 Cond.	0754010007
Connector, Power, 25 Pin Rect.	0749080001
Hood, Connector, W/Cable Clamp	0749100001
Plug, Phono	1006220011
Screwlock Assy., Male	0749220007
Spacer, .171ID, .250 OD, .375L	0509030009

FIGURE 2-3 CABLE ASSEMBLY, ARU-904/MPC-1000CR

9187040182

9187040182A CABLE ASSY, AUX ARU-904

Bushing, Telescoping, .44 ID	0700550046
Cable, 7 Cond/Pairs No. 24	0604710003
Clamp, Cable, Connector	0740250001
Connector, Power, 10 Pin Round	0754000001

DESIGNATOR	P1
TYPE	MS3106(18-19)
SUNAIR PART NO.	
0754000001	

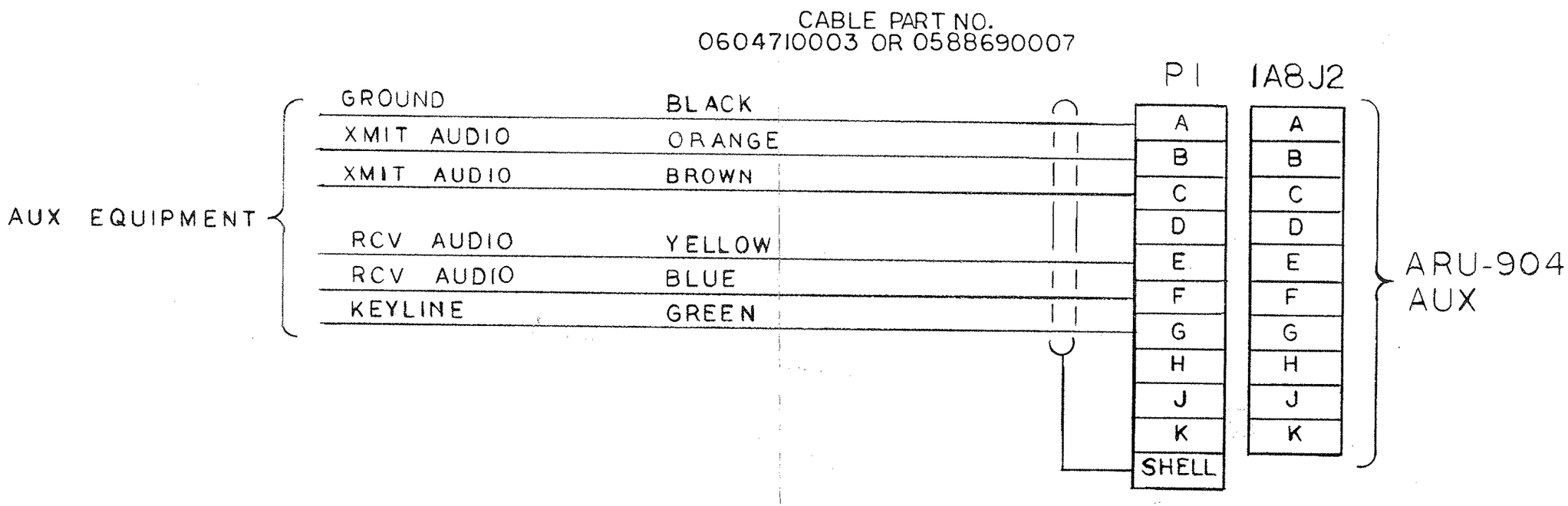

FIGURE 2-4 CABLE ASSEMBLY, AUX ARU-904

8068002073

8068002090B CABLE ASSY, POWER

Bushing, Telescoping, .44 ID	0700550046
Cable, 7 Cond. No. 18	0588690007
Clamp, Cable, Connector	0740250001
Connector, Power, 10 Pin Round	0754000001

DESIGNATOR	TYPE	SUNAIR PART NO.
P1-P2	MS3106A(18-19 P)	0754000001

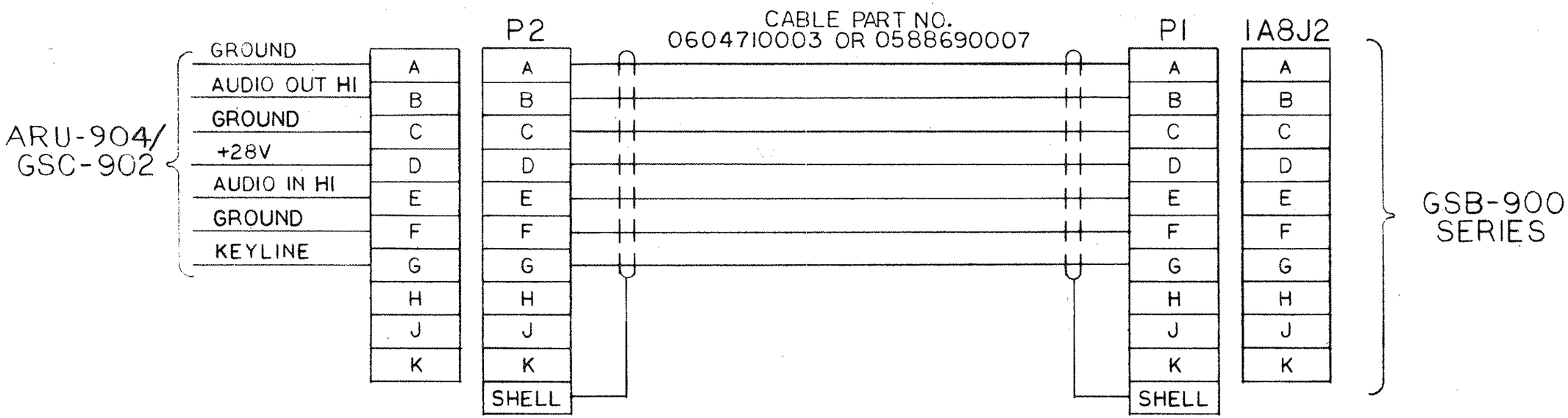

FIGURE 2-5 CABLE ASSEMBLY, POWER

SECTION III

OPERATION

3.1 GENERAL

This section provides instructions required for proper operation of the ARU-904 Automatic Retransmission Unit.

3.2 OPERATING CONTROLS AND INDICATORS

Refer to Figure 3-1.

CONTROLS

1 SELECTOR SWITCH

a) ON/OFF: Controls primary power. ON position places the ARU-904 in standby.

b) AUX 1: Selects the VHF Transceiver connected to the Auxiliary 1 position.

c) AUX 2: Selects the VHF Transceiver connected the Auxiliary 2 position. NOTE: Available only when the Auxiliary 2 position is equipped with an Audio Board 1A3.

2 AUX KEY/HF KEY: (3 positions) Manual keyline and audio override permits operator to key and pass audio regardless of squelch detector status.

3 HF DATA/HF RETRANSMIT: (2 positions) Selects retransmission or HF RTTY for use with the HF Transceiver. Retransmission in the HF DATA position is disabled.

INDICATORS

4 ON LED: Indicates +12 VDC power is on.

5 HF KEY LED: Indicates HF Keyline is active.

6 AUX KEY LED: Indicates auxiliary keyline is active.

7 AUX XMT LED: Indicates audio is present on the auxiliary transmit line. LED follows the syllabic characteristics of speech.

8 AUX REC LED: Indicates audio is present on the auxiliary receive line. LED follows the syllabic characteristics of speech.

3.3 REAR APRON CONNECTIONS

Refer to Figure 3-2.

9 HF XCVR: Connects HF Transceiver. Provides power, audio and keyline.

10 TELEPRINTER: Connects Model 43 Teleprinter. Provides RS-232 send and receive lines. Connector Type DB-25, female.

11 TELEPHONE MODEM: Connects Telephone Modem. Provides RS-232 send and receive lines. Connector Type DB-25, female.

12 HF MODEM: Connects HF DATA Modem, Model MPC-1000CR. Provides RS-232 send and receive lines. Connector Type DB-25, female.

13 AUX 1: Connects VHF Transceiver. Provides transmit and receive audio, 0 DBM (2.2 VPPK) 600 ohms, balanced and Keyline, transistor type open collector, switch to ground.

14 AUX 2: Same as AUX 1. When AUX 2 position is equipped with an Audio Board 1A3.

3.4 GENERAL OPERATING INSTRUCTIONS

The DATA and VHF equipment utilized in this system contain features and capabilities that extend beyond the scope

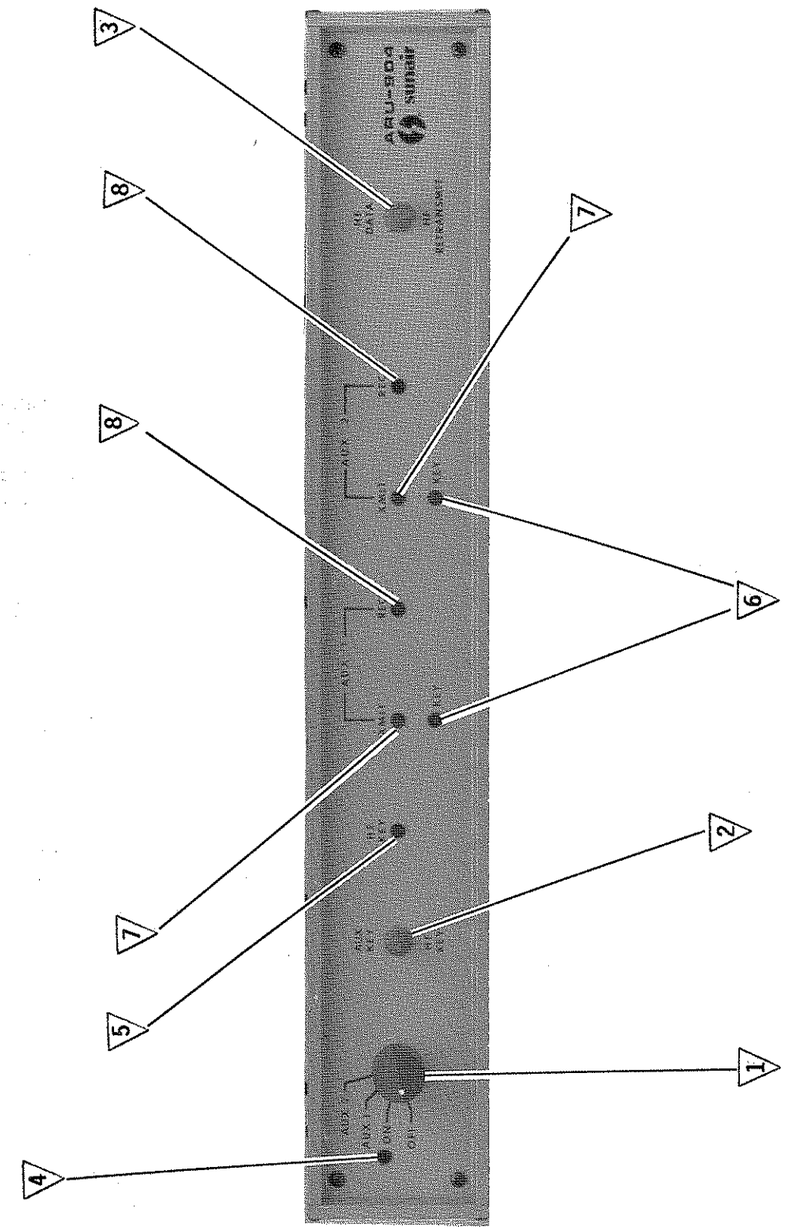

FIGURE 3-1 ARU-904 OPERATING CONTROLS AND INDICATORS

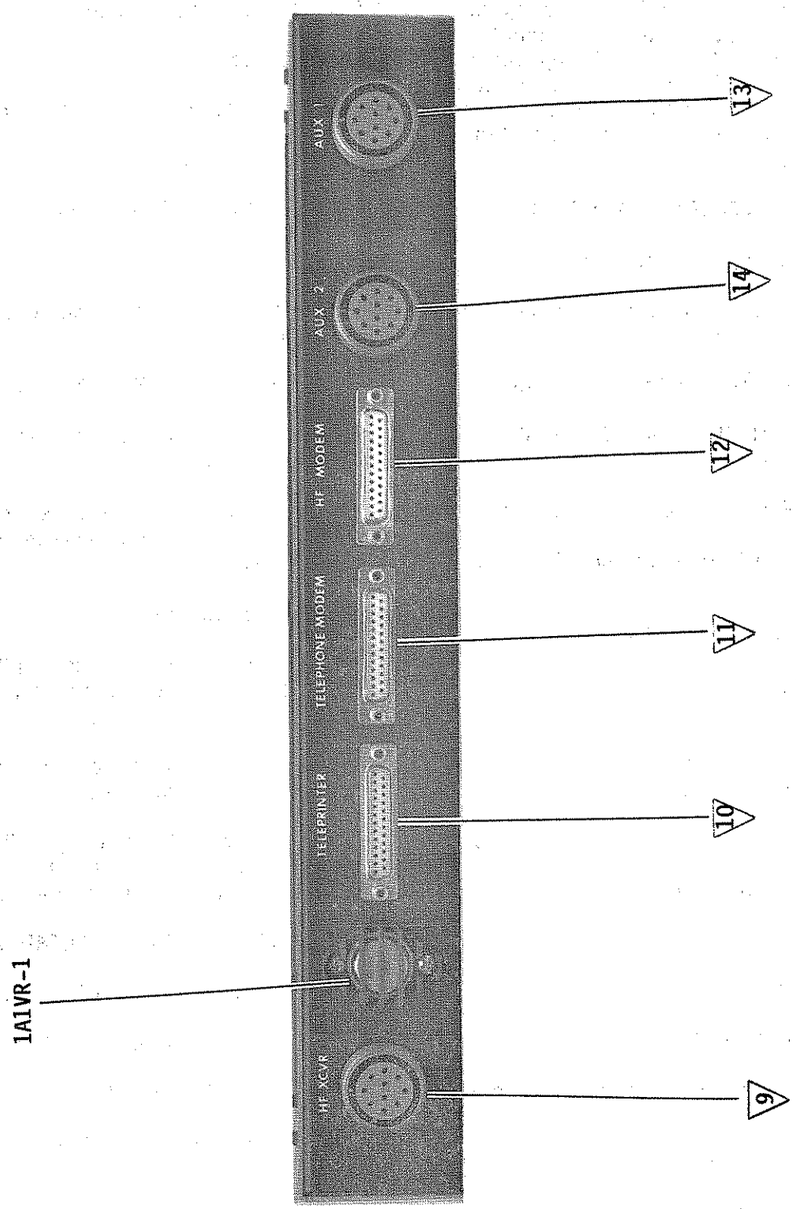

FIGURE 3-2 ARU-904 REAR APRON CONNECTIONS

of this manual. Therefore the following operating procedures should be used as a general operating guideline and system testing procedure. Specific operating features of the Model 43 Teleprinter, MPC-1000CR Modem, Telephone Modem and VHF Transceiver not found in this section are provided in the individual equipment operating manuals.

3.5 HF DATA - PRELIMINARY SET UP

3.5.1 HF Transceiver, GSB-900DX

a) Tune the HF System to the desired operating frequency.

3.5.2 Retransmission Unit, ARU-904

a) SELECTOR SWITCH: ON, Power ON LED should illuminate.

b) AUX KEY/HF KEY: Center position.

c) HF DATA/HF RETRANSMIT: HF DATA position.

3.5.3 HF Modem, MPC-1000CR

a) POWER: ON

b) REGEN: OFF

c) FILTER: Wide

d) SIGNAL: 45

e) NORMAL/REVERSE: Normal

f) MODE: MS

g) DAS/SCL: Mark

h) AUTOSTART/MOTOR ON: OFF

i) LEVEL: Adjust as required (receive signal level)

j) Threshold: Full CW

k) MARK: 1575 (Adjust as required)

l) SPACE: 2425 (Adjust as required)

m) REC/SEND: REC

3.5.4 Teleprinter, Model 43

a) POWER: ON

b) Wait for "TERM ON LINE" Lamp

3.6 HF DATA RECEIVE

3.6.1 HF MODEM, MPC-1000CR

a) REC/SEND: REC

b) Tune the MPC-1000CR to the desired signal.

c) AUTOSTART/MOTOR ON: Autostart

d) The Teleprinter should copy the desired signal.

e) At the end of the message, place the "AUTOSTART/MOTOR ON" switch in the OFF position.

3.7 HF DATA TRANSMIT

a) Place the HF Modem, MPC-1000CR "REC/SEND" Switch in the "SEND" position.

b) Send the desired message from the teleprinter keyboard.

c) Place the HF Modem, MPC-1000CR "REC/SEND" switch in the "RECEIVE" position at the end of message.

3.8 TELEPHONE DATA - PRELIMINARY

3.8.1 RETRANSMISSION UNIT, ARU-904

a) HF DATA/HF RETRANSMIT: Retransmit

b) SELECTOR SWITCH: ON

3.8.2 TELEPRINTER, MODEL 43

a) POWER: ON

b) Wait for "TERM ON LINE" LAMP

3.8.3 TELEPHONE MODEM

a) POWER: ON

3.8.4 TELEPHONE DATA SEND/RECEIVE

a) Send A T, then carriage return.

b) Unit should print, OK.

c) Follow user system protocol.

3.9 HF/VHF RETRANSMIT - PRELIMINARY

3.9.1 RETRANSMISSION UNIT, ARU-904

a) SELECTOR SWITCH: ON

b) AUX KEY/HF KEY: Center position.

c) HF DATA/HF RETRANSMIT: HF DATA position.

d) SELECTOR SWITCH: AUX 1

3.9.2 HF TRANSCEIVER/VHF TRANSCEIVER

a) Tune the HF and VHF systems to the desired operating frequencies.

3.9.3 HF/VHF RETRANSMISSION

a) Place the HF DATA/HF RETRANSMIT switch in the HF RETRANSMIT position.

NOTE

If the received signals are below the system required levels, the signal may be manually retransmitted by the AUX KEY/HF KEY switch.

SECTION IV

THEORY OF OPERATION

4.1 GENERAL

Section IV contains the theory of operation for the ARU-904: Chassis Assembly 1A1, Front Panel Board 1A2, Audio Board 1A3, and Teletype Interface Board 1A4.

4.2 OVERALL BLOCK DIAGRAM

Figure 4-1 is an overall block diagram of the ARU-904. Figure 4-2 is a block diagram of the Audio Board 1A3.

4.3 CHASSIS ASSEMBLY - 1A1

4.3.1 GENERAL

Refer to Figure 5-2.

The Chassis Assembly 1A1 provides the wiring interconnect for the Front Panel Board 1A2, Audio Board 1A3, and Teletype Interface Board 1A4. The 1A1 assembly provides regulated +12 VDC to all assemblies except the Teletype Interface Board 1A3, which operates at 28 VDC from the HF Transceiver.

4.3.2 VOLTAGE REGULATOR

Voltage regulator 1A1VR1 regulates the +28 VDC supplied by the HF Transceiver to +12 VDC. Capacitors 1A1C1 and C2 are RF bypass capacitors. Regulator 1A1VR1 contains automatic protection circuits. The output voltage (pin 2, +12VDC) will automatically foldback to 1 volt or less during periods of overcurrent or thermal overload. Protection before the regulator relies on the transceiver's power supply protection circuits.

4.4 FRONT PANEL ASSEMBLY - 1A2

4.4.1 GENERAL

Refer to Figure 5-3.

The Front Panel Board interfaces the Audio Board(s) 1A3 with the HF Transceiver and VHF Transceiver. The board contains the HF transmit audio line driver, keyline, keyline LED drivers, control logic and power switching.

4.4.2 HF TRANSMIT AUDIO

HF transmit audio appears on the input of summing amplifier U2A from pin 8 of the AUX 1 or AUX 2 Audio Board connector. U2B amplifies the transmit audio to 0 db (2.2 VPPK) which is applied to the HF Transceivers external audio input 1A8J2 pins B and C.

4.4.3 KEYLINE - KEYLINE LED LOGIC

A High on pin 11 of Auxiliary Board(s) 1 or 2 will place the output of OR gate U1B High, turning on keyline transistor Q1, keying the transceiver.

The High from Auxiliary 1 or 2 will also place the output of OR gate U1C High, turning on LED driver Q2, illuminating 1A1CR8. Switch S2 permits the HF Keyline - HF Keyline LED to be operated from the front panel. When placed in the manual HF KEY position, a High appears on the input of OR gate U1C and U1B activating the HF Keyline - HF Keyline LED.

4.4.4 POWER SWITCHING

+12 VDC is controlled by selector switch S1. When placed in the "ON" position power is supplied to front panel LED 1A1CR11 and the 12 VDC positions on the AUX 1 and 2 boards. When S1 is placed in the AUX 1 or 2 position, +12 VDC switched is also supplied. The +12 V SW positions enable the Syllabic Detector.

4.5 AUDIO BOARD ASSEMBLY - 1A3

4.5.1 GENERAL

Refer to Figure 5-4.
The Audio Board contains the syllabic squelch detectors, speech LED drivers, keyline detectors, audio AGC and transmit audio line driver.

The board is divided into two areas of operation, HF RECEVIE-AUXILIARY TRANSMIT (sheet 1) and AUXILIARY RECEIVER-HF TRANSMIT (sheet 2).

Each section utilizes the same circuitry with minor differences in the keyline detector logic and transmit audio. The circuit discussions will center on the HF RECEIVE-AUXILIARY TRANSMIT section. This theory of operation applies also to the AUXILIARY RECEIVE-HF TRANSMIT SECTION.

4.5.2 ZERO CROSSING DETECTOR AND ONE SHOT

The HF Receive Audio is buffered by U1D. The output drives zero crossing detector U5A. At each zero crossing of the input audio sinewave, U5A produces a square wave. The negative edge of the square wave triggers the one shot circuit U2A, B, D and Q15 producing a 0.3 ms pulse for each input square wave.

4.5.3 LOWPASS FILTER AND SYLLABIC DETECTOR

The output pulses from the one-shot are averaged by lowpass filter R18, R19, C5, AND C6 and U2C. The lowpass filters 3 db point has been selected to provide the best syllabic speech detection to noise falsing ratio.

The output of the lowpass filter produces a linear output voltage relative to the receive audio rate of change within the bandpass of the filter. This voltage drives phase splitter U3A which provides a positive going voltage for negative and positive syllabic rate frequency deviations.

The output of phase splitter U2C is AC coupled to detector U3A. The base of U3A is forward biased to 1.6 VDC by fixed voltage reference CR4-6. The emitters are biased to 1.6 VDC by bias adjust network U3D, B, C and squelch level control 1A3R44. R44 is factory set to 1.65 VDC at TP1. Reducing the voltage decreases squelch sensitivity (increase emitter bias U3A). Increasing the voltage increases squelch sensitivity (decrease emitter bias U3A).

When the output of phase splitter U2C exceeds the squelch threshold of U3A the collector of U3A goes Low. U2E inverts the Low output of U3A to a High. The High appears on the collector of U2E for the duration of the syllabic activity.

4.5.4 KEYLINE TIMING AND DETECTION

The attack-release time circuitry U4A, U4B and U4D sets the keyline and audio switch attack and release timing.

Voltage comparator U4A threshold is set for 1.5 VDC by resistor divider R55, R56. When the output of U2E appears greater then 1.5 VDC the output of U4A will switch High. This transition will be delayed by attack time constant R37, C9. When the output of U4A exceeds 6 VDC, U4B will invert the input signal placing U4B pin 2 Low. This Low appears as long as the inverting input pin 4 is High.

When U4B pin 4 goes High the output remains Low for time delay R40, C10 providing keyline release delay.

Comparator U4D buffers the output of U4B. The output of U4D drives keyline detector U5C. The output of the keyline detector and switched 12 VDC are ANDed at U7B. The output of U7B drives OR gate U6A and OR gate U6B. The output of OR gate U6A drives the keyline transistor Q6 collector Low, keying the VHF transceiver. The output of OR gate U6B drives the

9187040280

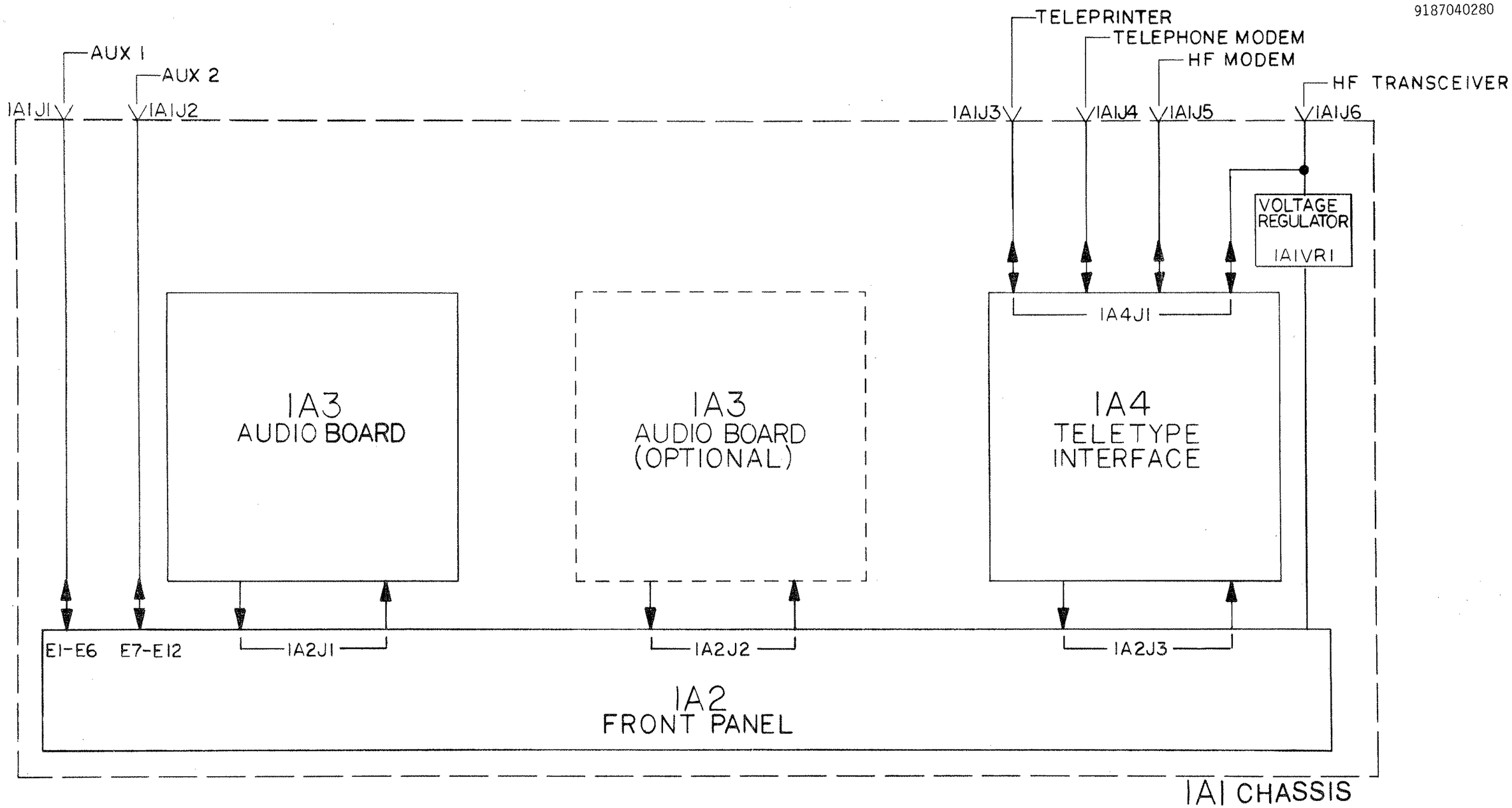

FIGURE 4-1 OVERALL BLOCK DIAGRAM, ARU-904

"Teleprinter" connector 1A1J3 to the "Telephone Modem" connector 1A1J4. Relay K3 routes the HF send and receive audio to edge connector 1A4P3 which mates with 1A2J3.

SECTION V

MAINTENANCE AND REPAIR

5.1 GENERAL

This section provides test procedures for routine maintenance and alignment of the ARU-904.

5.2 DISASSEMBLY

Remove top, left side, and right side cover screws, 11 screws total.

5.3 ARU-904 ALIGNMENT - AUDIO BOARD 1A3

Refer to Figure 5-1.

CAUTION

Logic levels are +12 VDC for a High. **NOT TTL COMPATIBLE.**

5.3.1 TEST EQUIPMENT

The following list of test equipment or equivalent is required to perform the test procedures outlined in this section.

a) Oscilloscope: Textronix 2445
b) 600 Ohm Audio Generator: HP 200CD
c) Audio VTVM: HP 400 EL
d) VOM: Simpson 260
e) 28 VDC Power Supply: HP 6269B
f) Connector, Power, 10 Pin Round (2 ea.): Sunair p/n 0754000001 (MS3106A-18-19P)
g) 600 Ohm Resistor (1 ea)

5.3.2 Preliminary Set-Up

a) Rotate SELECTOR SWITCH to OFF position.

b) Using connector p/n 0754000001 connect 28 VDC to 1A1J6 (HF XCVR) pin D and ground to pin A.

c) Using connector p/n 0754000001 place a 600 ohm resistor between 1A1J1 (AUX 1) pins B and C.

d) Place AUX KEY/HF KEY switch to center position.

e) Place HF DATA/HF RETRANSMIT switch to HF RETRANSMIT position.

5.3.3 ALIGNMENT

a) Rotate SELECTOR SWITCH to AUX 1 position (HF KEY LED and all AUX 1 LEDs should illuminate then extinguish).

b) Connect VOM to 1A3TP1 and ground. Adjust 1A3R44 for +1.60 VDC.

c) Connect VOM to 1A3TP3 and ground. Adjust 1A3R121 for +1.60 VDC. Disconnect VOM.

d) Connect Audio Generator to 1A1J6 (HF XCVR) pins E and F (pin E at ground) using connector p/n 0754000001. Set the generator for +2 DB @ 1 KHz. Monitor 1A3TP2 with an oscilloscope. Place AUX KEY/HF KEY switch to AUX KEY position. Adjust 1A4R1 (on Teletype Interface board) until waveform "limits". Adjust 1A3R75 for +2.2 VPP or desired output. Return key switch to center position.

e) Remove 600 ohm resistor from pins E and F of 1A1J1 and connect the 600 ohm resistor to pins B and C of 1A1J6. Connect the Audio Generator to pins E and F of 1A1J1 (AUX 1). Set the generator for 0 DBM @ 1 KHz. Monitor pin 1A3U13 pin 14 with an oscilloscope and adjust 1A3R148 until a full square wave appears, do not adjust further.

f) End of alignment procedures.

5.4 VOLTAGE CHECKS

5.4.1 PRELIMINARY

Set front panel controls on the ARU-904 as follows:

HF DATA/HF RETRANSMIT: HF TRANSMIT

AUX KEY/HF KEY: Center position

SELECTOR SWITCH: ON

5.4.2 +28 VDC VOLTAGE CHECK

Set VOM to 50 volt range and test the following points for 28 VDC ± 10%.

a) 1A1J6 pin D

b) Base of 1A1VR-1

c) 1A1P1 pin 30

5.4.3 +12 VDC VOLTAGE CHECK

Set VOM to 50 volt range and test the following points for 12 VDC ± 10%.

a) Emitter of 1A1VR-1

b) E25 on Front Panel 1A2

c) Pins 8, 9, 10, 11 (shorted together) of 1A2S1 SELECTOR SWITCH.

d) Pin 18, component side, of each Audio Board 1A3 installed.

e) All LEDs except the POWER LED.

5.4.4 SWITCHED 12 VDC CHECK

Set VOM to 50 volt range and test the following points for 12 VDC ± 10%.

a) Pin 19, component side, of each Audio Board 1A3 selected by SELECTOR SWITCH, i.e. AUX 1 or AUX 2.

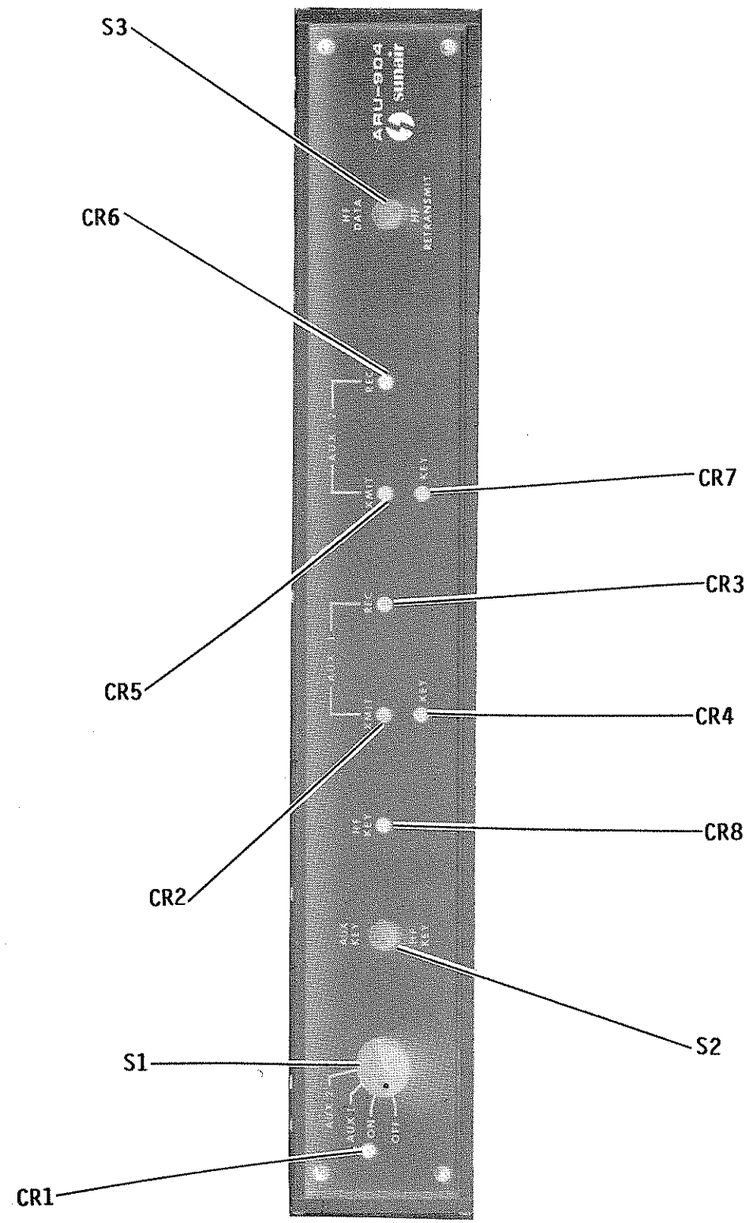

FIGURE 5-1 COMPONENT LOCATIONS SHEET 1

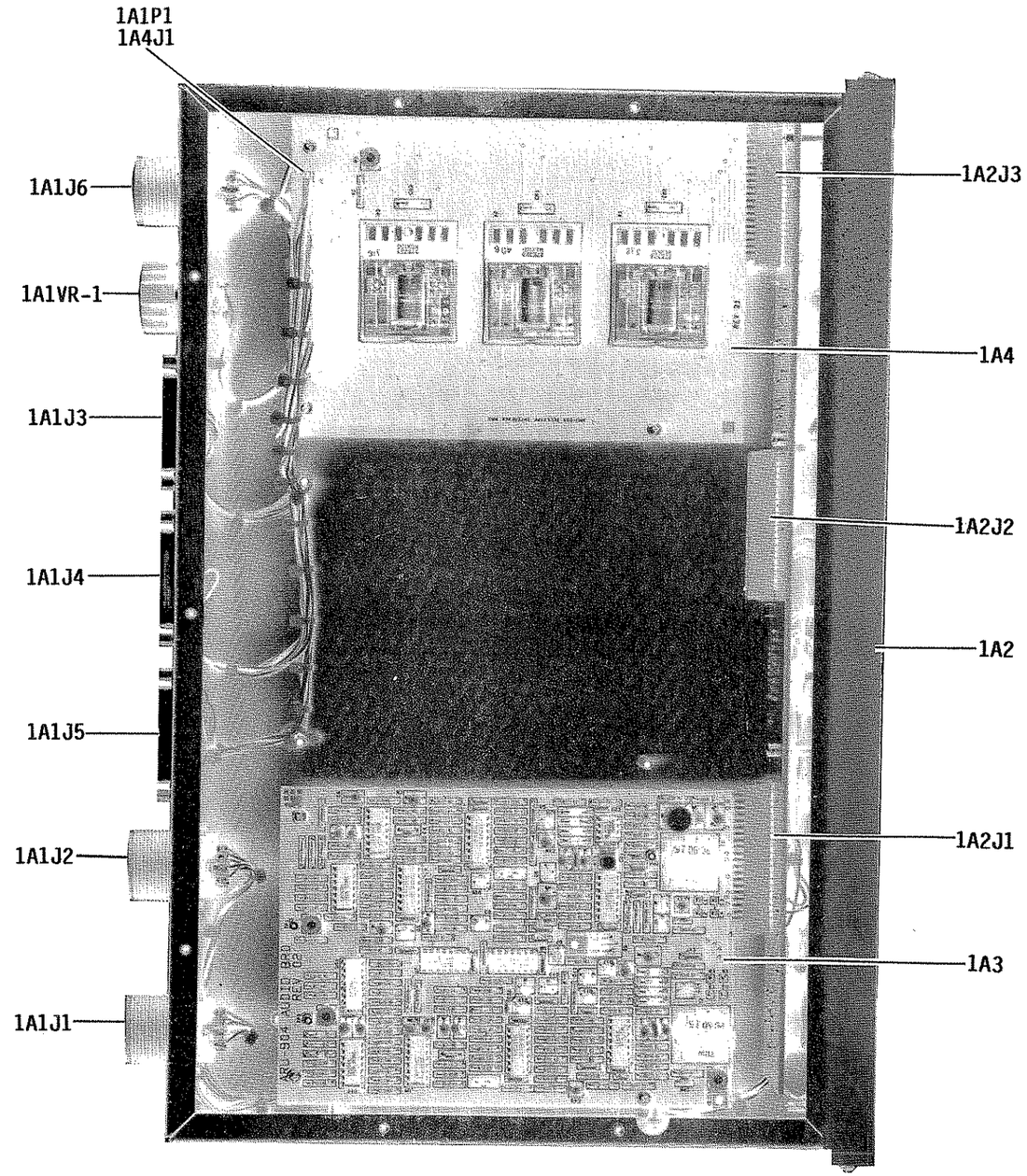

FIGURE 5-1 COMPONENT LOCATIONS SHEET 2

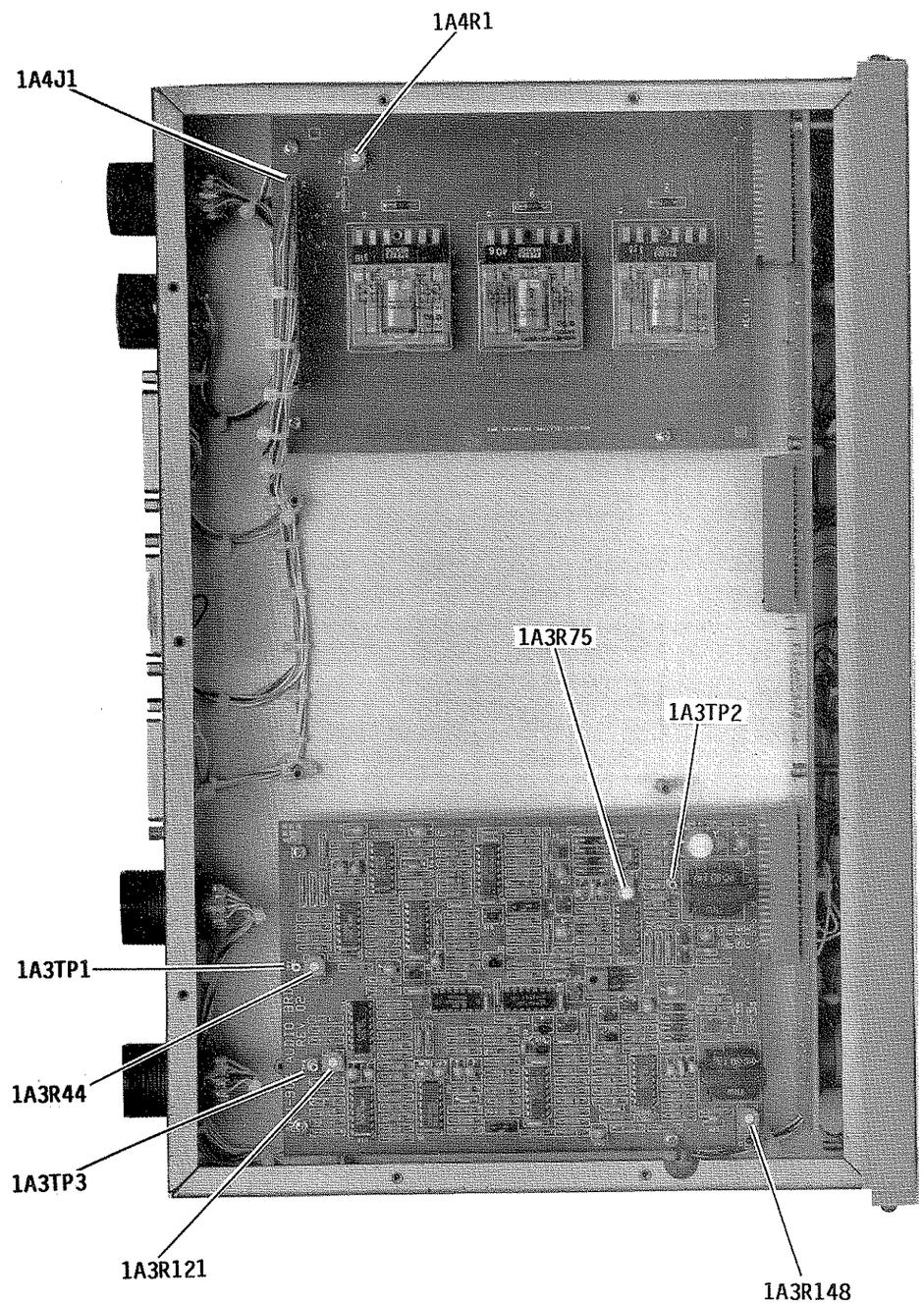

FIGURE 5-1 COMPONENT LOCATIONS
SHEET 3

5.5 FAULT ANAYLSIS

CIRCUIT UNDER TEST	INSTRUCTIONS	RESULT/ACTION
5.5.1 HF Receive Auxiliary Transmit	a. Connect Audio Generator, set for +2 DB @ 1 KHz to 1A1J6 pins E and F on rear panel. (Pin E at ground.) Terminate pins B and C of 1A1J1 with 600 ohm resistor. b. Monitor 1A3TP2 on Audio Board 1A3 with an oscilloscope. c. Place SELECTOR SWITCH in AUX 1 position and AUX KEY/HF KEY to AUX KEY.	NORMAL: 1) Audio signal of +2.2VPP appears at 1A3TP2. 2) A +7VPP square wave appears on 1A3U5 pin 1. 3) A +10VPP square wave appears on 1A3U2 pin 4. ABNORMAL: 1) Check audio input at 1A4R2 (Interface Board). Check 1A4J1 pin 5 component side, 1A3Q1, Q2, Q5, U1A, U1B, U1C, U8A, U8B and associated components. 2) Check 1A3U1 pin 14 for +4.5VPP audio signal. Check 1A3CR1, U5A and associated components. 3) Check 1A3CR2, U2A, B, C and associated components.
5.5.2 Auxiliary Transmit Control Circuits	a. Return AUX KEY/HF KEY switch to center position. Remove audio from 1A1J6 pins E and F. Inject a 10 Hz -5 DB audio signal into the low pass filter circuit at the cathode of 1A3CR2. b. Change the frequency of the signal to 13 Hz.	NORMAL: 1) AUX 1 XMIT LED flashes. 2) AUX 1 Key LED illuminates. 3) AUX 1 Key LED extinguishes. ABNORMAL: 1) Check 1A3U2 pin 9 for a 3.5VPP sinewave signal. Check 1A3U2 pin 7 for a 3.5VPP sinewave. Check 1A3U3 pin 3 for a halfwave signal of 1VPP. Check 1A3U3 pin 5 for a square wave of 1VPP. Check 1A3U2B and U2D and associated components. 2) Check comparators 1A3U4A, B, D, U5C and associated components. Check 1A3U7B, U6A and Q6. 3) Check low pass filter components 1A3 Q15, U2B, U2D, R18, R19, C4, C5, C6, CR3, U2A.

5.5 FAULT ANAYLSIS CONT.

CIRCUIT UNDER TEST	INSTRUCTIONS	RESULT/ACTION
5.5.3 Auxiliary Receive HF Transmit	a. Connect Audio Generator, set for +0DB @ 1KHz to 1A1J1 pins E and F on rear panel. Terminate pins B and C of 1A1J6 with a 600 ohm resistor. b. Monitor 1A3U12 pin 8 on Audio Board 1A3 with an oscilloscope. c. Place SELECTOR SWITCH in AUX 1 position and AUX KEY/HF KEY to HF KEY.	NORMAL: 1) Audio signal of +1.0 VPP appears at 1A3U12 pin 8. 2) A +7VPP square wave appears on 1A3U13 pin 14. 3) A +10VPP square wave appears on 1A3U9 pin 4. ABNORMAL: 1) Check audio input at 1A3J1 pin 3 and 4, solder side of Audio Board 1A3. Check 1A3Q10, Q11, Q14, U12B, U12C, U12D and associated components. 2) Check 1A3U12 pin 1 for 100-200 mv audio signal. Check 1A3CR11, U13C and associated components. 3) Check 1A3CR12, U9A, U9B, U9C and associated components.
5.5.4 HF Transmit Control Circuits	a. Return AUX KEY/HF KEY switch to center position. Remove audio from 1A1J1 pins E and F. Inject a 10 Hz -5 DB audio signal into the low pass filter circuit at the cathode of 1A3CR12. b. Change the frequency of the signal to 13 Hz.	NORMAL: 1) HF XMIT LED flashes. 2) HF KEY LED illuminates. 3) HF KEY LED extinguishes. ABNORMAL: 1) Check 1A3U9 pin 9 for a 3.5 VPP sinewave. Check 1A3U9 pin 7 for a 3.5 VPP sinewave. Check 1A3U10 pin 3 for a halfwave signal of 1 VPP. Check 1A3U10 pin 5 for a square wave of 1 VPP. Check 1A3U9B and U9D and associated components. 2) Check comparators 1A3U11A, U11B, U11D, U13A and associated components. Check 1A3U7D. 3) Check low pass filter components 1A3Q16, U9B, U9D, R95, R96, C33, C35, CR13 and U9A.

5.5 FAULT ANALYSIS CONT.

CIRCUIT UNDER TEST	INSTRUCTIONS	RESULT/ACTION
5.5.5 Manual Key Circuits	Place SELECTOR SWITCH in AUX 1 position. Place AUX KEY/HF KEY to:	
	a. AUX KEY	NORMAL: a.1) AUX 1 Key LED illuminates. 2) 1A1J1 pin G goes to ground. ABNORMAL: a.1) Check 1A3U7C, U6B, Q7. 2) Check 1A3U7B, U6A, Q6.
	b. HF KEY	NORMAL: b.1) HF KEY LED illuminates. 2) 1A1J6 pin G goes to ground. ABNORMAL: b.1) Check 1A2U1C, Q2. 2) Check 1A2U1B, Q1, 1A1J1 pin 28.
	Operate HF DATA/HF RETRANSMIT switch to: a. HF DATA b. HF RETRANSMIT	NORMAL: Relays operate and contacts make continuity per schematic. ABNORMAL: Defective relays.

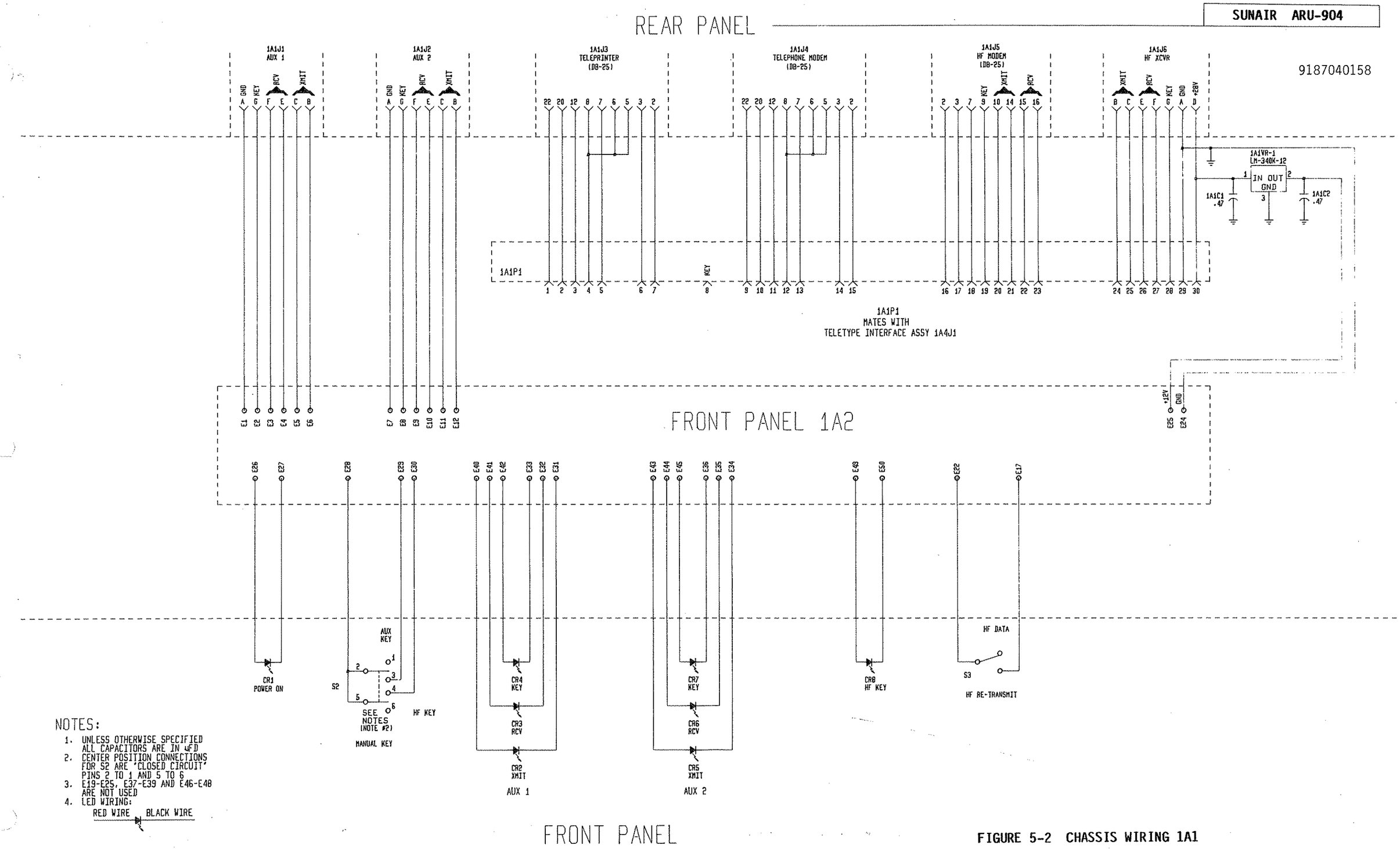

NOTES:

1. UNLESS OTHERWISE SPECIFIED ALL CAPACITORS ARE IN µFD
2. CENTER POSITION CONNECTIONS FOR S2 ARE 'CLOSED CIRCUIT' PINS 2 TO 1 AND 5 TO 6
3. E19-E25, E37-E39 AND E46-E48 ARE NOT USED
4. LED WIRING:

RED WIRE — BLACK WIRE

FIGURE 5-2 CHASSIS WIRING 1A1

SUNAIR ARU-904

9187040085A CHASSIS ASSY 1A1

REF SYMBOL	DESCRIPTION	SUNAIR PART NO.
	CHASSIS ASSY 1A1 ARU-904	9187040085
CR1	LED, Red, POWER ON	1006710001
CR2	LED, Red, XMIT	1006710001
CR3	LED, Red, RCV	1006710001
CR4	LED, Red, KEY	1006710001
CR5	LED, Red, XMIT	1006710001
CR6	LED, Red, RCV	1006710001
CR7	LED, Red, KEY	1006710001
CR8	LED, Red, HF KEY	1006710001
S2	Switch, Toggle, DPDT, AUX/HF KEY	0334730007
S3	Switch, Toggle, DPDT, HF DATA/RETURN	0334610001
1A1C1	Capacitor, 0.47µf, 50V, X5V, 20%	0283370009
1A1C2	Capacitor, 0.47µf, 50V, X5V, 20%	0283370009
1A1J1	Connector, Power, 10 Pin Round	0753990008
1A1J2	Connector, Power, 10 Pin Round	0753990008
1A1J3	Connector, Power, 25 Pin Rect.	0748930001
1A1J4	Connector, Power, 25 Pin Rect.	0748930001
1A1J5	Connector, Power, 25 Pin Rect.	0748930001
1A1J6	Connector, Power, 10 Pin Round	0753990008
1A1VR-1	IC. Linear, Vol. Reg. LM340K12	1002910005
	MISCELLANEOUS	
	Boot, Toggle Switch ¼-40	0531120007
	Bump-Ons	9187040239
	Heatsink, TO-3 Transistor	1005130001
	Knob, .70 D, BLK, Wht Dot, Skrt	0346060001
	Screwlock Assy. Female	0749340002
	Socket, Transistor TO-3 XVR-1	0841550000

9187040247A HARNESS ASSY

REF SYMBOL	DESCRIPTION	SUNAIR PART NO.
	HARNESS ASSY	9187040247
1A1P1	Connector, Strip, 20 Pin Female	8033225602

9187040123

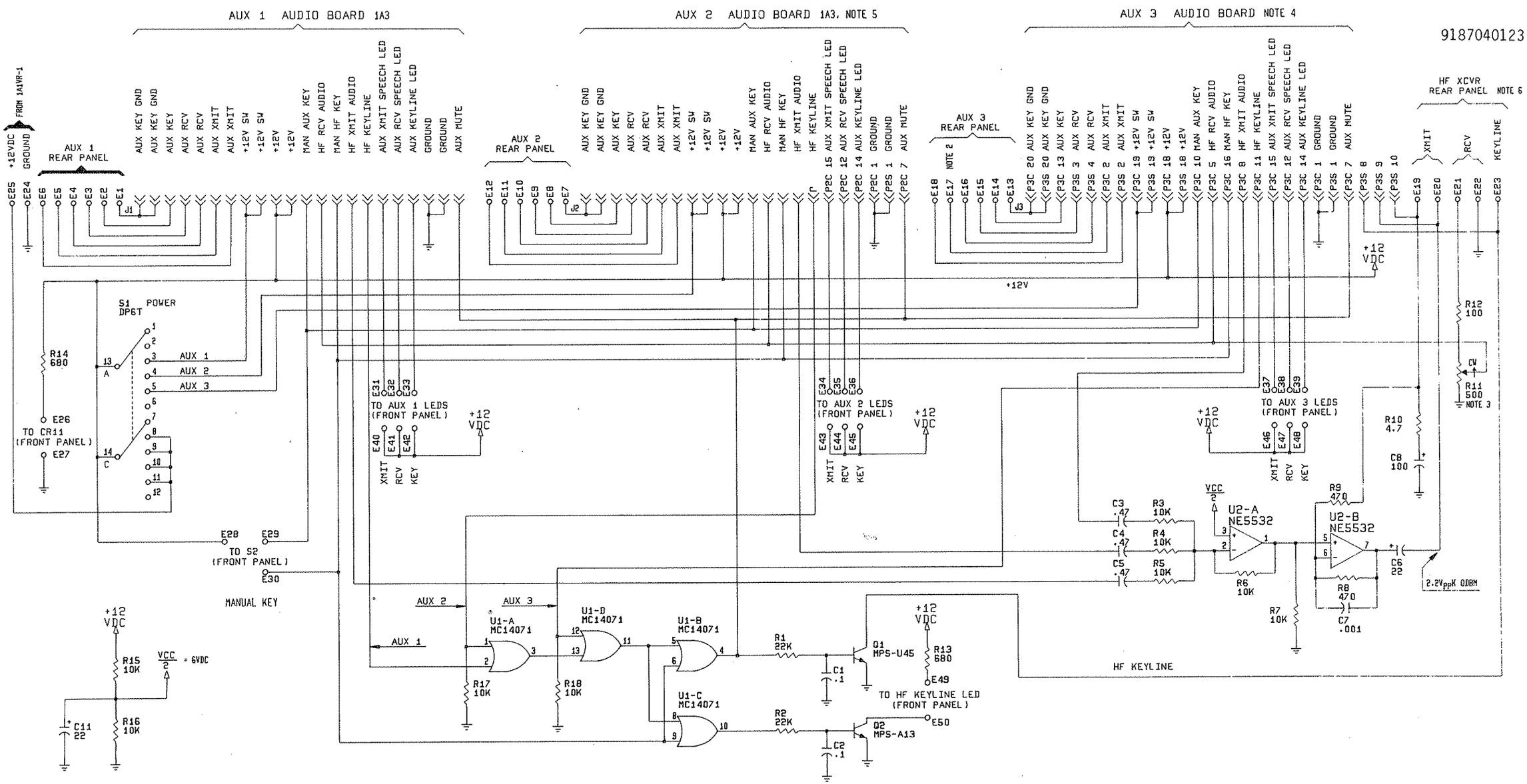

NOTES:
1. UNLESS OTHERWISE SPECIFIED
   A. CAPACITORS ARE IN uF
   B. RESISTORS ARE 1/4 WATT
2. E17 USED WITH TELETYPE INTERFACE ASSY. 1A4.
3. R11 NOT USED. HF RCV AUDIO IS ADJUSTED ON TELETYPE INTERFACE BOARD 1A4.
4. TELETYPE INTERFACE 1A4 INSTALLED IN AUX 3 POSITION.
5. AUX 2 1A3 AUDIO BOARD IS OPTIONAL
6. NOT USED WHEN TELETYPE INTERFACE 1A4 IS INSTALLED.

SC205

LAST USED
C11
CR11
Q2
R18
U2

FIGURE 5-3 FRONT PANEL 1A2

9187040204A PC ASSY FRONT PANEL 1A2

REF SYMBOL	DESCRIPTION	SUNAIR PART NO.
	PC ASSY FRONT PANEL 1A2	9187040204
C1	Capacitor, 0.1µf, 50V, X7R, 20%	0281610002
C2	Capacitor, 0.1µf, 50V, X7R, 20%	0281610002
C3	Capacitor, 0.47µf, 50V, X5V, 20%	0283370009
C4	Capacitor, 0.47µf, 50V, X5V, 20%	0283370009
C5	Capacitor, 0.47µf, 50V, X5V, 20%	0283370009
C6	Capacitor, 22µf, 15V, 196D	0281690006
C7	Capacitor, 0.001µf, 100V, X7R, 20%	0281630003
C8	Capacitor, 100µf, 25V, 20%	1005350035
C9	Capacitor, 0.1µf, 50V, X7R, 20%	0281610002
C10	Capacitor, 0.1µf, 50V, X7R, 20%	0281610002
C11	Capacitor, .22µf, 15V, 196D	0281690006
J1	Connector, PC, 20 Pin Female	1003321101
J2	Connector, PC, 20 Pin Female	1003321101
J3	Connector, PC, 20 Pin Female	1003321101
Q1	Transistor, NPN, SI MPSU45	0448570009
Q2	Transistor, NPN, SI MPS-A13	1003323502
R1	Resistor, 22K, 5%, ¼W	0172230004

REF SYMBOL	DESCRIPTION	SUNAIR PART NO.
R2	Resistor, 22K, 5%, ¼W	0172230004
R3	Resistor, 10K, 10%, ¼W	0170410005
R4	Resistor, 10K, 10%, ¼W	0170410005
R5	Resistor, 10K, 10%, ¼W	0170410005
R6	Resistor, 10K, 10%, ¼W	0170410005
R7	Resistor, 10K, 10%, ¼W	0170410005
R8	Resistor, 470, 10%, ¼W	0172610001
R9	Resistor, 470, 10%, ¼W	0172610001
R10	Resistor, 4.7, 5%, ¼W	1001060024
R12	Resistor, 100, 5%, ¼W	0171180003
R13	Resistor, 680, 10%, ¼W	0176630007
R14	Resistor, 680, 10%, ¼W	0176630007
R15	Resistor, 10K, 10%, ¼W	0170410005
R16	Resistor, 10K, 10%, ¼W	0170410005
R17	Resistor, 10K, 10%, ¼W	0170410005
R18	Resistor, 10K, 10%, ¼W	0170410005
S1	Switch, Rotary, DP6T, POWER	1004380011
U1	IC. Digital MC14071B	1005160023
U2	IC. Linear NE5532P	1006270019

COMPONENT SIDE

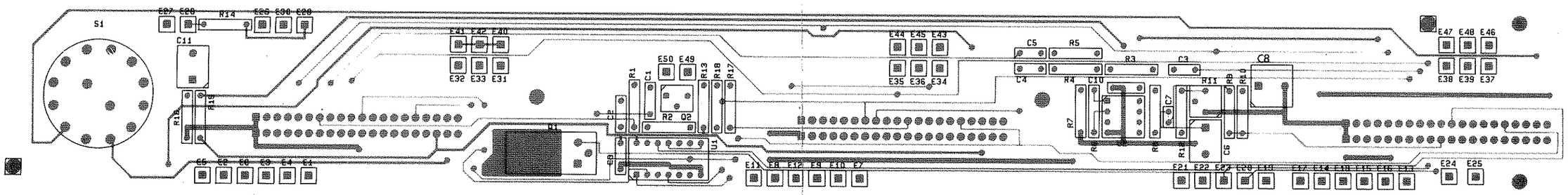

CIRCUIT SIDE

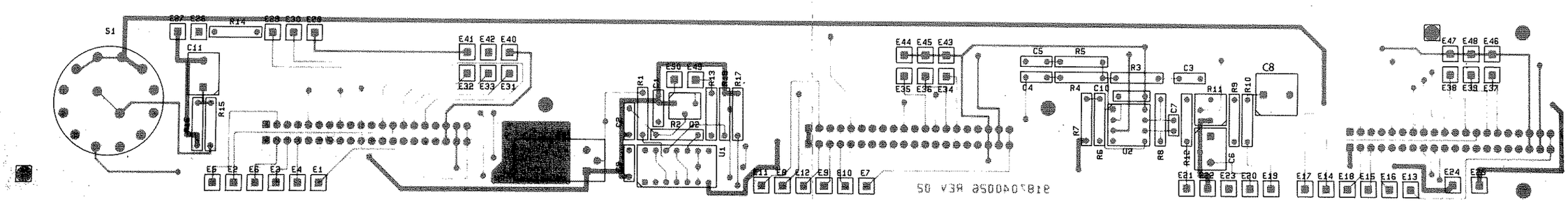

9187040131

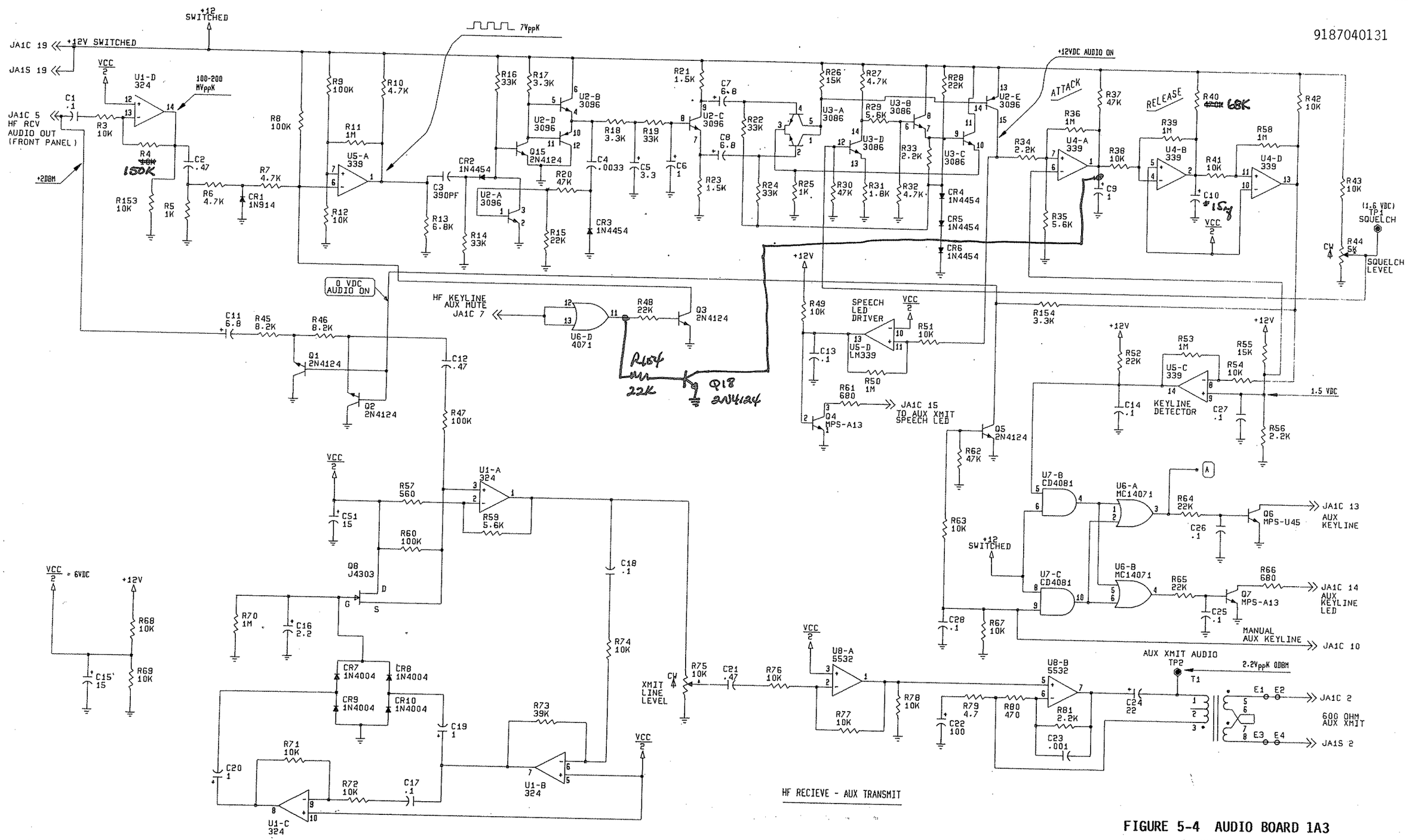

FIGURE 5-4 AUDIO BOARD 1A3
SHEET 1

9187040131

SUNAIR ARU-904

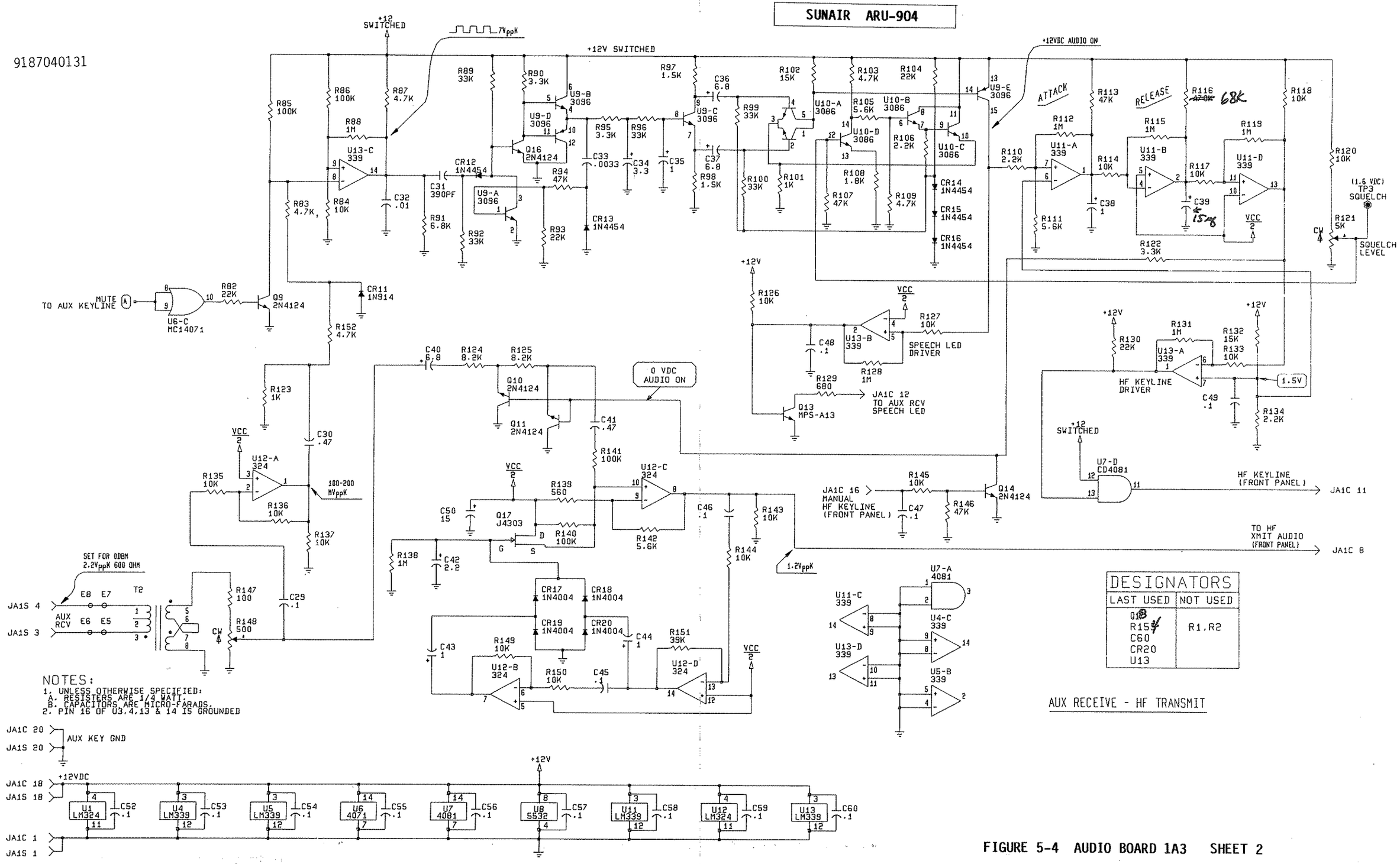

DESIGNATORS	
LAST USED	NOT USED
Q18 R154 C60 CR20 U13	R1,R2

NOTES:
1. UNLESS OTHERWISE SPECIFIED:
A. RESISTERS ARE 1/4 WATT.
B. CAPACITORS ARE MICRO-FARADS.
2. PIN 16 OF U3,4,13 & 14 IS GROUNDED

AUX RECEIVE - HF TRANSMIT

FIGURE 5-4 AUDIO BOARD 1A3 SHEET 2

9187040212B PC ASSY AUDIO 1A3

REF SYMBOL	DESCRIPTION	SUNAIR PART NO.
	PC ASSY AUDIO 1A3	9187040212
C1	Capacitor, 0.1µf, 50V	1001010027
C2	Capacitor, 0.47µf, 50V, X5V, 20%	0283370009
C3	Capacitor, 390pf, 500V, DM15, 2%	0281040001
C4	Capacitor, 0.0033µf, 100V, NPO, 10%	0282580000
C5	Capacitor, 3.3µf, 35V, 196D	0281680001
C6	Capacitor, 1µf, 35V, 196D	0281660000
C7	Capacitor, 6.8µf, 20V, T368	0296780006
C8	Capacitor, 6.8µf, 20V, T368	0296780006
C9	Capacitor, 1µf, 35V, 196D	0281660000
C10	Capacitor, 1µf, 35V, 196D	0281660000
C11	Capacitor, 6.8µf, 20V, T368	0296780006
C12	Capacitor, 0.47µf, 50V, X5V, 20%	0283370009
C13	Capacitor, 0.1µf, 50V, X7R, 20%	0281610002
C14	Capacitor, 0.1µf, 50V, X7R, 20%	0281610002
C15	Capacitor, 15µf, 15V, 196D	0281720002
C16	Capacitor, 2.2µf, 15V, T368	0296420000
C17	Capacitor, 0.1µf, 50V, X7R, 20%	0281610002
C18	Capacitor, 0.1µf, 50V, X7R, 20%	0281610002
C19	Capacitor, 1µf, 35V, 196D	0281660000
C20	Capacitor, 1µf, 35V, 196D	0281660000
C21	Capacitor, 0.47µf, 50V, X5V, 20%	0283370009
C22	Capacitor, 100µf, 25V, 20%	1005350035
C23	Capacitor, 0.001µf, 100V, X7R, 20%	0281630003
C24	Capacitor, 22µf, 15V, 196D	0281690006
C25	Capacitor, 0.1µf, 50V, X7R, 20%	0281610002
C26	Capacitor, 0.1µf, 50V, X7R, 20%	0281610002
C27	Capacitor, 0.1µf, 50V, X7R, 20%	0281610002
C28	Capacitor, 0.1µf, 50V, X7R, 20%	0281610002
C29	Capacitor, 0.1µf, 50V	1001010027
C30	Capacitor, 0.47µf, 50V, X5V, 20%	0283370009
C31	Capacitor, 390pf, 500V, DM15, 2%	0281040001
C32	Capacitor, .01µf, 50V, X7R, 20%	0281730008
C33	Capacitor, 0.0033µf, 100V, NPO, 10%	0282580000
C34	Capacitor, 3.3µf, 35V, 196D	0281680001
C35	Capacitor, 1µf, 35V, 196D	0281660000
C36	Capacitor, 6.8µf, 20V, T368	0296780006
C37	Capacitor, 6.8µf, 20V, T368	0296780006
C38	Capacitor, 1µf, 35V, 196D	0281660000
C39	Capacitor, 1µf, 35V, 196D	0281660000
C40	Capacitor, 6.8µf, 20V, T368	0296780006
C41	Capacitor, 0.47µf, 50V, X5V, 20%	0283370009
C42	Capacitor, 2.2µf, 15V, T368	0296420000
C43	Capacitor, 1µf, 35V, 196D	0281660000
C44	Capacitor, 1µf, 35V, 196D	0281660000
C45	Capacitor, 0.1µf, 50V, X7R, 20%	0281610002
C46	Capacitor, 0.1µf, 50V, X7R, 20%	0281610002
C47	Capacitor, 0.1µf, 50V, X7R, 20%	0281610002
C48	Capacitor, 0.1µf, 50V, X7R, 20%	0281610002
C49	Capacitor, 0.1µf, 50V, X7R, 20%	0281610002
C50	Capacitor, 15µf, 15V, 196D	0281720002
C51	Capacitor, 15µf, 15V, 196D	0281720002
C52	Capacitor, 0.1µf, 50V, X7R, 20%	0281610002
C53	Capacitor, 0.1µf, 50V, X7R, 20%	0281610002
C54	Capacitor, 0.1µf, 50V, X7R, 20%	0281610002
C55	Capacitor, 0.1µf, 50V, X7R, 20%	0281610002
C56	Capacitor, 0.1µf, 50V, X7R, 20%	0281610002
C57	Capacitor, 0.1µf, 50V, X7R, 20%	0281610002
C58	Capacitor, 0.1µf, 50V, X7R, 20%	0281610002
C59	Capacitor, 0.1µf, 50V, X7R, 20%	0281610002
C60	Capacitor, 0.1µf, 50V, X7R, 20%	0281610002
CR1	Diode, Signal, SI. 1N914	0442900007
CR2	Diode, Signal, Sil. 1N4454	0405270003
CR3	Diode, Signal, Sil. 1N4454	0405270003
CR4	Diode, Signal, Sil. 1N4454	0405270003
CR5	Diode, Signal, Sil. 1N4454	0405270003
CR6	Diode, Signal, Sil. 1N4454	0405270003
CR7	Diode, Rectifier 1N4004	0405180004
CR8	Diode, Rectifier 1N4004	0405180004
CR9	Diode, Rectifier 1N4004	0405180004

REF SYMBOL	DESCRIPTION	SUNAIR PART NO.
CR10	Diode, Rectifier 1N4004	0405180004
CR11	Diode, Signal, SI. 1N914	0442900007
CR13	Diode, Signal, Sil. 1N4454	0405270003
CR14	Diode, Signal, Sil. 1N4454	0405270003
CR15	Diode, Signal, Sil. 1N4454	0405270003
CR16	Diode, Signal, Sil. 1N4454	0405270003
CR17	Diode, Rectifier 1N4004	0405180004
CR18	Diode, Rectifier 1N4004	0405180004
CR19	Diode, Rectifier 1N4004	0405180004
CR20	Diode, Rectifier 1N4004	0405180004
Q1	Transistor, NPN, SI. 2N4124	0448010003
Q2	Transistor, NPN, SI. 2N4124	0448010003
Q3	Transistor, NPN, SI. 2N4124	0448010003
Q4	Transistor, NPN, SI. MPS-A13	1003323502
Q5	Transistor, NPN, SI. 2N4124	0448010003
Q6	Transistor, NPN, SI. MPSU45	0448570009
Q7	Transistor, NPN, SI. MPS-A13	1003323502
Q8	Transistor, N-CH. FET J4303	0443930007
Q9	Transistor, NPN, SI. 2N4124	0448010003
Q10	Transistor, NPN, SI. 2N4124	0448010003
Q11	Transistor, NPN, SI. 2N4124	0448010003
Q13	Transistor, NPN, SI. MPS-A13	1003323502
Q14	Transistor, NPN, SI. 2N4124	0448010003
Q15	Transistor, NPN, SI. 2N4124	0448010003
Q16	Transistor, NPN, SI. 2N4124	0448010003
Q17	Transistor, N-CH. FET J4303	0443930007
R3	Resistor, 10K, 10%, ¼W	0170410005
R4	Resistor, 10K, 10%, ¼W	0170410005
R5	Resistor, 1K, 10%, ¼W	0171560001
R6	Resistor, 4.7K, 5%, ¼W	0170770001
R7	Resistor, 4.7K, 5%, ¼W	0170770001
R8	Resistor, 100K, 10%, ¼W	0170390004
R9	Resistor, 100K, 10%, ¼W	0170390004
R10	Resistor, 4.7K, 5%, ¼W	0170770001
R11	Resistor, 1M, 10%, ¼W	0170650006
R12	Resistor, 10K, 10%, ¼W	0170410005
R13	Resistor, 6.8K, 5%, ¼W	0174810008
R14	Resistor, 33K, 10%, ¼W	0177920009
R15	Resistor, 22K, 5%, ¼W	0172230004
R16	Resistor, 33K, 10%, ¼W	0177920009
R17	Resistor, 3.3K, 10%, ¼W	0170890007
R18	Resistor, 3.3K, 10%, ¼W	0170890007
R19	Resistor, 33K, 10%, ¼W	0177920009
R20	Resistor, 47K, 10%, ¼W	0171060008
R21	Resistor, 1.5K, 10%, ¼W	0172470005
R22	Resistor, 33K, 10%, ¼W	0177920009
R23	Resistor, 1.5K, 10%, ¼W	0172470005
R24	Resistor, 33K, 10%, ¼W	0177920009
R25	Resistor, 1K, 10%, ¼W	0171560001
R26	Resistor, 15K, 10%, ¼W	0172350000
R27	Resistor, 4.7K, 5%, ¼W	0170770001
R28	Resistor, 22K, 5%, ¼W	0172230004
R29	Resistor, 5.6K, 10%, ¼W	0183060008
R30	Resistor, 47K, 10%, ¼W	0171060008
R31	Resistor, 1.8K, 10%, ¼W	0178190004
R32	Resistor, 4.7K, 5%, ¼W	0170770001
R33	Resistor, 2.2K, 5%, ¼W	0178070009
R34	Resistor, 2.2K, 5%, ¼W	0178070009
R35	Resistor, 5.6K, 10%, ¼W	0183060008
R36	Resistor, 1M, 10%, ¼W	0170650006
R37	Resistor, 47K, 10%, ¼W	0171060008
R38	Resistor, 10K, 10%, ¼W	0170410005
R39	Resistor, 1M, 10%, ¼W	0170650006
R40	Resistor, 470K, 10%, ¼W	0180570005
R41	Resistor, 10K, 10%, ¼W	0170410005
R42	Resistor, 10K, 10%, ¼W	0170410005
R43	Resistor, 10K, 10%, ¼W	0170410005
R44	POT., 5K, 10%, ½W, 4 Turns	0197510001
R45	Resistor, 8.2K, 5%, ¼W	0192070002
R46	Resistor, 8.2K, 5%, ¼W	0192070002

REF SYMBOL	DESCRIPTION	SUNAIR PART NO.
R47	Resistor, 100K, 10%, ¼W	0170390004
R48	Resistor, 22K, 5%, ¼W	0172230004
R49	Resistor, 10K, 10%, ¼W	0170410005
R50	Resistor, 1M, 10%, ¼W	0170650006
R51	Resistor, 10K, 10%, ¼W	0170410005
R52	Resistor, 22K, 5%, ¼W	0172230004
R53	Resistor, 1M, 10%, ¼W	0170650006
R54	Resistor, 10K, 10%, ¼W	0170410005
R55	Resistor, 15K, 10%, ¼W	0172350000
R56	Resistor, 2.2K, 5%, ¼W	0178070009
R57	Resistor, 560, 5%, ¼W	0183200004
R58	Resistor, 1M, 10%, ¼W	0170650006
R59	Resistor, 5.6K, 10%, ¼W	0183060008
R60	Resistor, 100K, 10%, ¼W	0170390004
R61	Resistor, 680, 10%, ¼W	0176630007
R62	Resistor, 47K, 10%, ¼W	0171060008
R63	Resistor, 10K, 10%, ¼W	0170410005
R64	Resistor, 22K, 5%, ¼W	0172230004
R65	Resistor, 22K, 5%, ¼W	0172230004
R66	Resistor, 680, 10%, ¼W	0176630007
R67	Resistor, 10K, 10%, ¼W	0170410005
R68	Resistor, 10K, 10%, ¼W	0170410005
R69	Resistor, 10K, 10%, ¼W	0170410005
R70	Resistor, 1M, 10%, ¼W	0170650006
R71	Resistor, 10K, 10%, ¼W	0170410005
R72	Resistor, 10K, 10%, ¼W	0170410005
R73	Resistor, 39K, 10%, ¼W	0177800003
R74	Resistor, 10K, 10%, ¼W	0170410005
R75	POT., 10K, 10%, ½W, PC MOUNT	0346630002
R76	Resistor, 10K, 10%, ¼W	0170410005
R77	Resistor, 10K, 10%, ¼W	0170410005
R78	Resistor, 10K, 10%, ¼W	0170410005
R79	Resistor, 4.7, 5%, ¼W	1001060024
R80	Resistor, 470, 5%, ¼W	0184110009
R81	Resistor, 2.2K, 5%, ¼W	0178070009
R82	Resistor, 22K, 5%, ¼W	0172230004
R83	Resistor, 4.7K, 5%, ¼W	0170770001
R84	Resistor, 10K, 10%, ¼W	0170410005
R85	Resistor, 100K, 10%, ¼W	0170390004
R86	Resistor, 100K, 10%, ¼W	0170390004
R87	Resistor, 4.7K, 5%, ¼W	0170770001
R88	Resistor, 1M, 10%, ¼W	0170650006
R89	Resistor, 33K, 10%, ¼W	0177920009
R90	Resistor, 3.3K, 10%, ¼W	0170890007
R91	Resistor, 6.8K, 5%, ¼W	0174810008
R92	Resistor, 33K, 10%, ¼W	0177920009
R93	Resistor, 22K, 5%, ¼W	0172230004
R94	Resistor, 47K, 10%, ¼W	0171060008
R95	Resistor, 3.3K, 10%, ¼W	0170890007
R96	Resistor, 33K, 10%, ¼W	0177920009
R97	Resistor, 1.5K, 10%, ¼W	0172470005
R98	Resistor, 1.5K, 10%, ¼W	0172470005
R99	Resistor, 33K, 10%, ¼W	0177920009
R100	Resistor, 33K, 10%, ¼W	0177920009
R101	Resistor, 1K, 10%, ¼W	0171560001
R102	Resistor, 15K, 10%, ¼W	0172350000
R103	Resistor, 4.7K, 5%, ¼W	0170770001
R104	Resistor, 22K, 5%, ¼W	0172230004
R105	Resistor, 5.6K, 10%, ¼W	0183060008
R106	Resistor, 2.2K, 5%, ¼W	0178070009
R107	Resistor, 47K, 10%, ¼W	0171060008
R108	Resistor, 1.8K, 10%, ¼W	0178190004

REF SYMBOL	DESCRIPTION	SUNAIR PART NO.
R109	Resistor, 4.7K, 5%, ¼W	0170770001
R110	Resistor, 2.2K, 5%, ¼W	0178070009
R111	Resistor, 5.6K, 10%, ¼W	0183060008
R112	Resistor, 1M, 10%, ¼W	0170650006
R113	Resistor, 47K, 10%, ¼W	0171060008
R114	Resistor, 10K, 10%, ¼W	0170410005
R115	Resistor, 1M, 10%, ¼W	0170650006
R116	Resistor, 470K, 10%, ¼W	0180570005
R117	Resistor, 10K, 10%, ¼W	0170410005
R118	Resistor, 10K, 10%, ¼W	0170410005
R119	Resistor, 1M, 10%, ¼W	0170650006
R120	Resistor, 10K, 10%, ¼W	0170410005
R121	POT., 5K, 10%, ½W, 4 Turns	0197510001
R122	Resistor, 3.3K, 10%, ¼W	0170890007
R123	Resistor, 1K, 10%, ¼W	0171560001
R124	Resistor, 8.2K, 5%, ¼W	0192070002
R125	Resistor, 8.2K, 5%, ¼W	0192070002
R126	Resistor, 10K, 10%, ¼W	0170410005
R127	Resistor, 10K, 10%, ¼W	0170410005
R128	Resistor, 1M, 10%, ¼W	0170650006
R129	Resistor, 680, 10%, ¼W	0176630007
R130	Resistor, 22K, 5%, ¼W	0172230004
R131	Resistor, 1M, 10%, ¼W	0170650006
R132	Resistor, 15K, 10%, ¼W	0172350000
R133	Resistor, 10K, 10%, ¼W	0170410005
R134	Resistor, 2.2K, 5%, ¼W	0178070009
R135	Resistor, 10K, 10%, ¼W	0170410005
R136	Resistor, 10K, 10%, ¼W	0170410005
R137	Resistor, 10K, 10%, ¼W	0170410005
R138	Resistor, 1M, 10%, ¼W	0170650006
R139	Resistor, 560, 5%, ¼W	0183200004
R140	Resistor, 100K, 10%, ¼W	0170390004
R141	Resistor, 100K, 10%, ¼W	0170390004
R142	Resistor, 5.6K, 10%, ¼W	0183060008
R143	Resistor, 10K, 10%, ¼W	0170410005
R144	Resistor, 10K, 10%, ¼W	0170410005
R145	Resistor, 10K, 10%, ¼W	0170410005
R146	Resistor, 47K, 10%, ¼W	0171060008
R147	Resistor, 100, 5%, ¼W	0171180003
R148	POT., 500, 10%, ½W, 4 Turns	0197510019
R149	Resistor, 10K, 10%, ¼W	0170410005
R150	Resistor, 10K, 10%, ¼W	0170410005
R152	Resistor, 4.7K, 5%, ¼W	0170770001
R153	Resistor, 10K, 10%, ¼W	0170410005
R154	Resistor, 3.3K, 10%, ¼W	0170890007
R163	Resistor, 39K, 10%, ¼W	0177800003
T1	Transformer, Audio, PC MOUNT	0491650001
T2	Transformer, Audio, PC MOUNT	0491650001
U1	IC. Linear LM324N	1003970001
U2	IC. Linear CA3096	1005860033
U3	IC. Linear CA3086	0447950002
U4	IC. Linear LM339N	1003970028
U5	IC. Linear LM339N	1003970028
U6	IC. Digital MC14071B	1005160023
U7	IC. Digital CD4081B	1006280031
U8	IC. Linear NE5532P	1006270019
U9	IC. Linear CA3096	1005860033
U10	IC. Linear CA3086	0447950002
U11	IC. Linear LM339N	1003970028
U12	IC. Linear LM324N	1003970001
U13	IC. Linear LM339N	1003970028

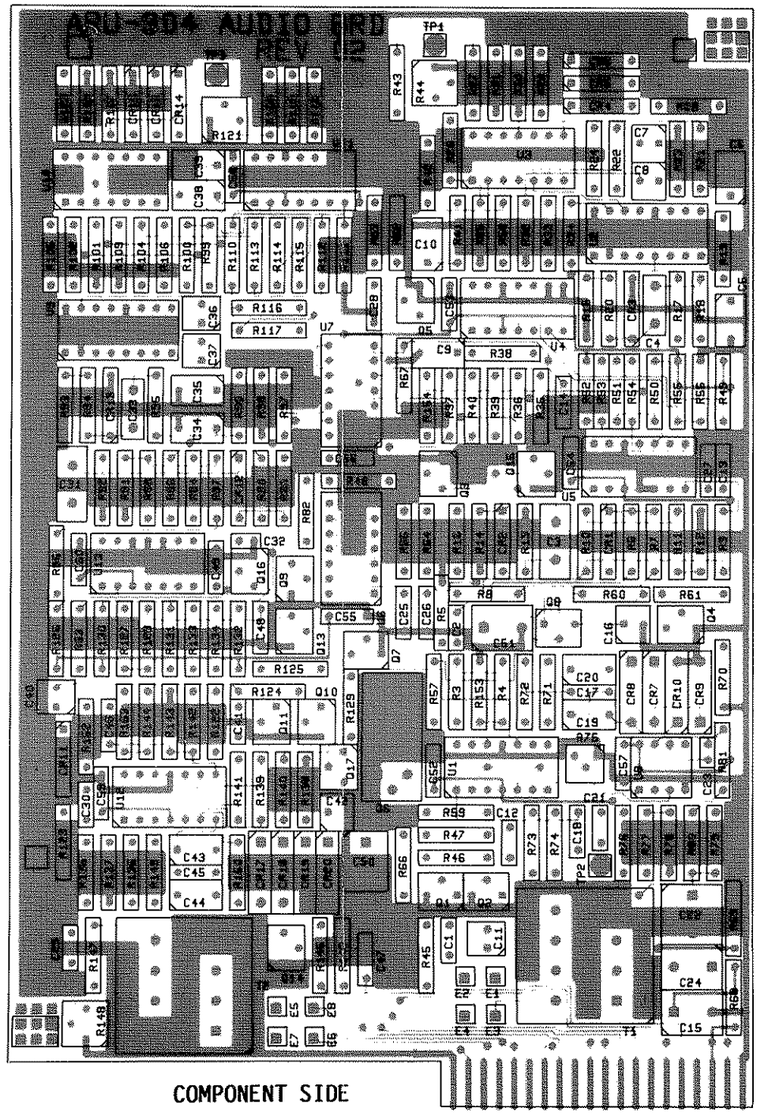

COMPONENT SIDE

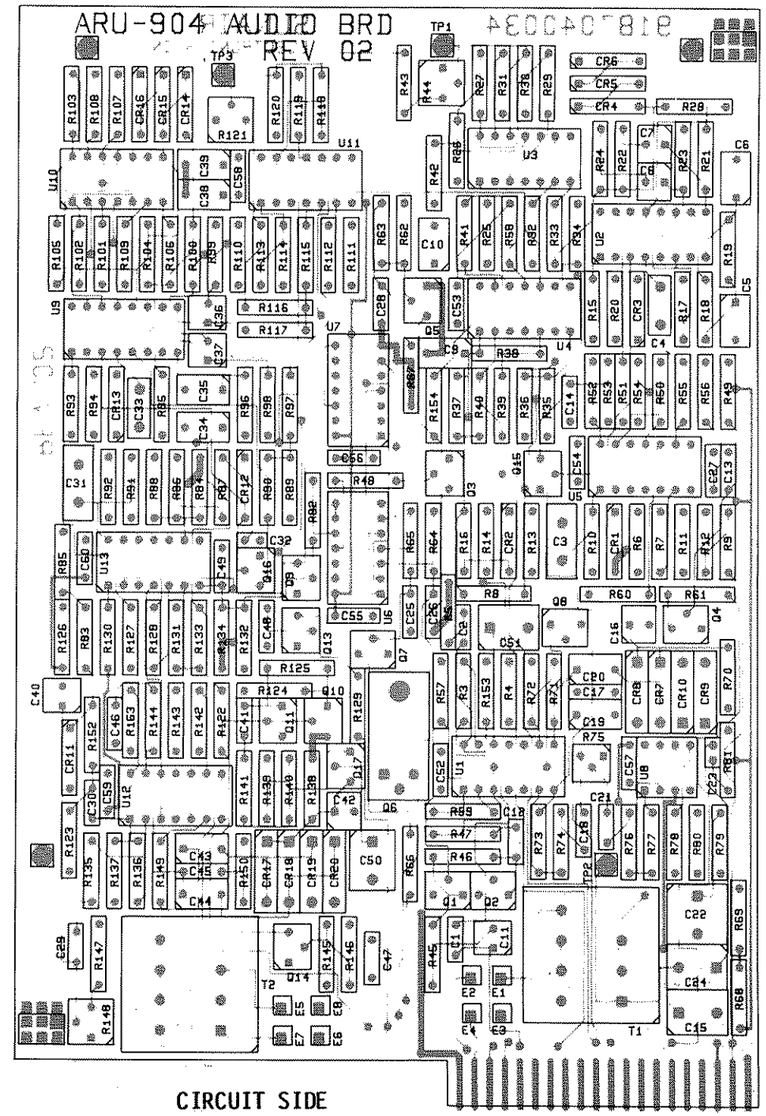

CIRCUIT SIDE

9187040093

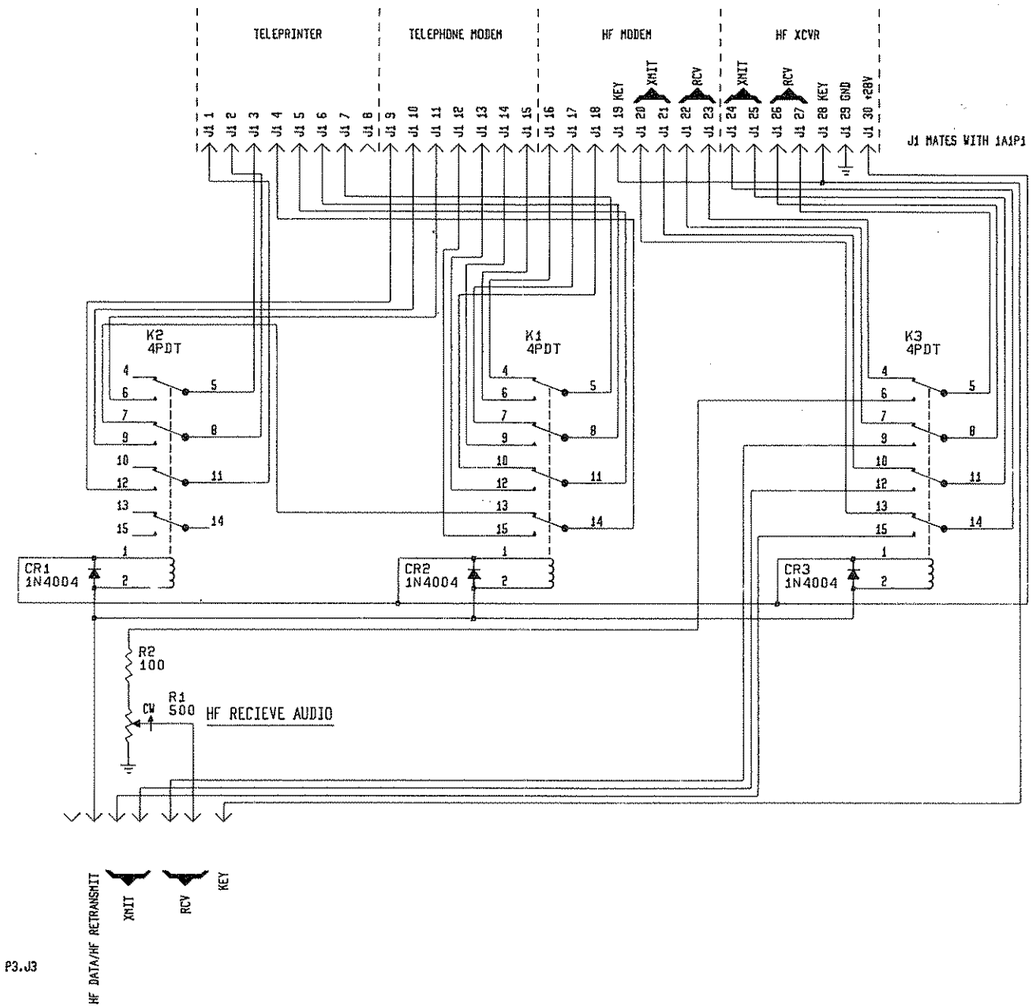

NOTES:

1. HF DATA/HF RE-TRANSMIT P3C 2 CONNECTS VIA U1A P3.J3 TO E17 ON FRONT PANEL MOTHER BOARD.

SC236

FIGURE 5-5 TELETYPE INTERFACE 1A4

9187040221A PC ASSY TELETYPE INTERFACE 1A4

REF SYMBOL	DESCRIPTION	SUNAIR PART NO.
	PC ASSY TELETYPE INTERFACE	9187040221
CR1	Diode, Rectifier 1N4004	0405180004
CR2	Diode, Rectifier 1N4004	0405180004
CR3	Diode, Rectifier 1N4004	0405180004
J1	Connector, PC, 30 Pin Male	1006510036
K1	Relay, 4PDT, 24V, PC MOUNT 7.5A	0661600009
K2	Relay, 4PDT, 24V, PC MOUNT 7.5A	0661600009
K3	Relay, 4PDT, 24V, PC MOUNT 7.5A	0661600009
R1	POT., 500, 10%, ½W, 4 Turns	0197510019
R2	Resistor, 100, 5%, ¼W	0171180003
	MISCELLANEOUS	
	Socket, Relay, 4PDT Contacts	0754700003
	Spring, Relay, Hold-Down	0881930008

ARU-904 TELETYPE INTERFACE BRD

COMPONENT SIDE

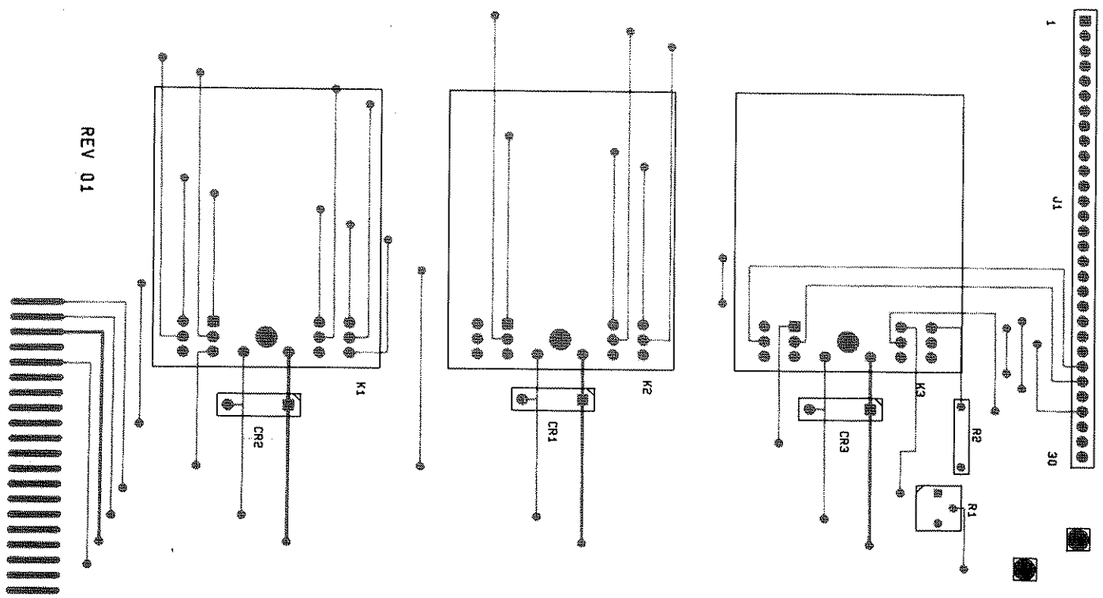

ARU-904 TELETYPE INTERFACE BRD
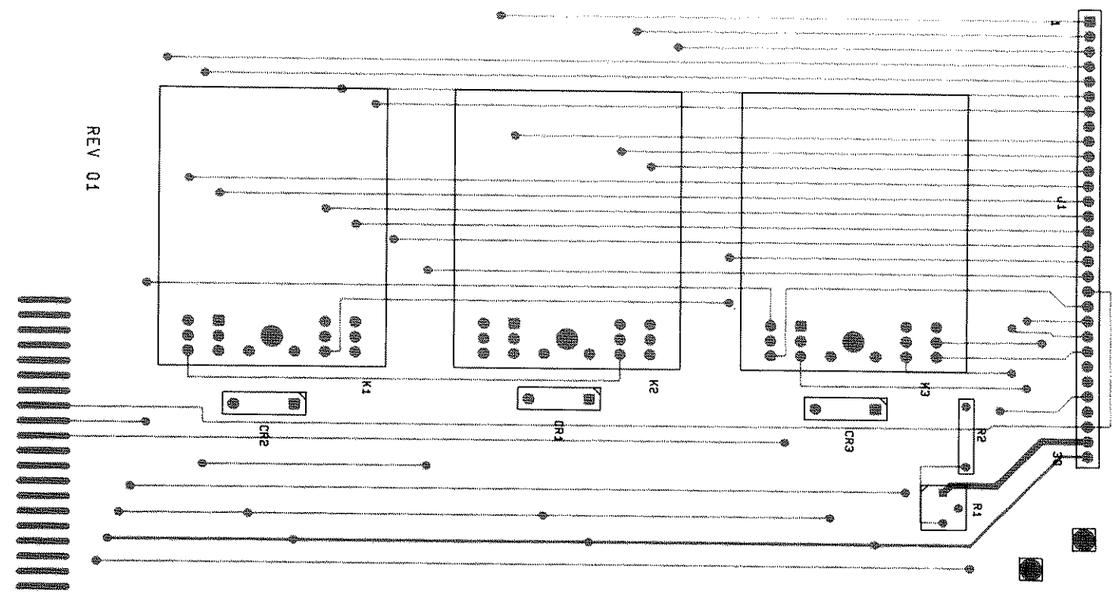
CIRCUIT SIDE