TM-8068000500

PRELIMINARY

OPERATION AND MAINTENANCE MANUAL

SELECTIVE CALL ENCODER/DECODER GSC-902

PRELIMINARY

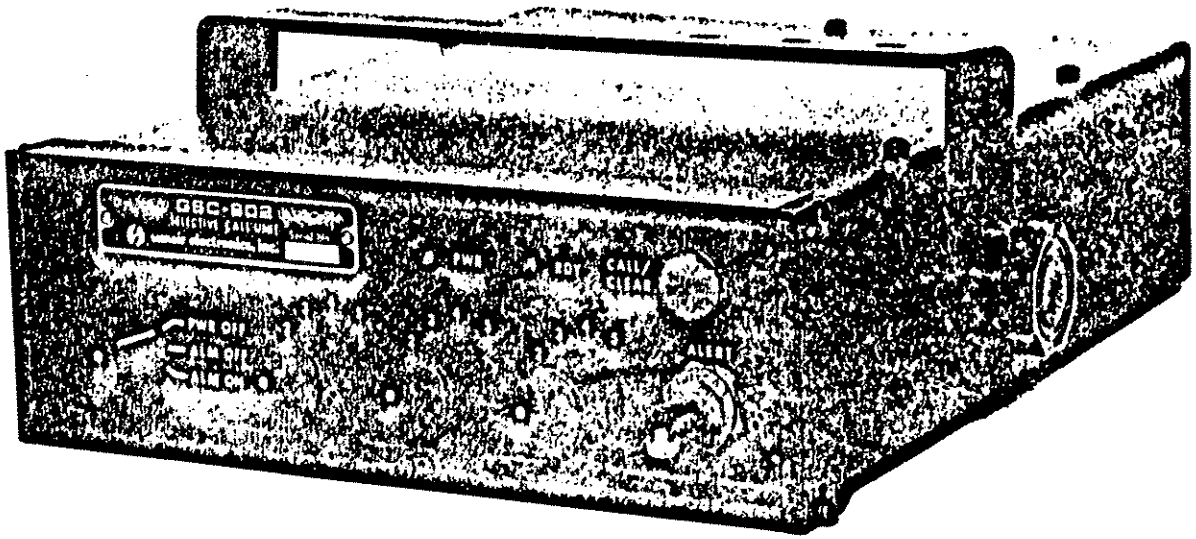
DBC-902
PWR
BDY
CALL/
CLEAR
PWR OFF
ALERT

SECTION I

GENERAL INFORMATION

1.1 SCOPE

This instruction manual describes the GSC-902 SELCALL unit, and includes information concerning its installation, operation, and maintenance.

1.2 GENERAL

The GSC-902 Selective Call (SELCALL) unit is designed to operate as a companion for the GSB-900 Series Transceivers to enhance the network communication capability.

The system will provide up to 3125 unique tone code groups and allows for up to 125 individual stations to be selectively called. The station call codes are easily accessed from the front panel without affecting the internally programmed self-identification coding. The GSC-902 automatically signals receipt of the call via visual and audible alarm and simultaneously acknowledges receipt to the originating station by transmitting a handshake tone group. A "Group Alert" feature is incorporated into the system which, when activated, will transmit an alert signal. This feature allows the operator to standby for: (example) possible emergency traffic; initiation of roll call, etc.

1.3 GSC-902 DESCRIPTION

The GSC-902 is designed to work as a companion unit to Sunair's GSB-900 Series Transceivers. The GSC-902 allows for individual station selection in a communications network.

Working with and powered by the transceiver, the GSC-902 supplies an audible tone to the transceiver for transmission on a valid USB or LSB frequency to the selected station.

The GSC-902 has been designed to meet the same rigid standards as our transceivers. The unit is completely sealed (dust free) making it ideal for mobile as well as base station use.

The GSC-902 is composed of four major assemblies, (1) Programming 1A1A1, (2) CPU 1A1A2, (3) Control 1A1A3, (4) Harness 1A1A4. See Figure 1.1 for major assembly locations.

1.3.1 Programming Assembly 1A1A1

The Programming Assembly 1A1A1 contains the reference clock oscillator and its associated circuitry for obtaining the needed frequencies. Also contained on the board is the reset circuitry, the Alert signal control and the five Self I.D. select switches.

1.3.2 CPU Assembly 1A1A2

This assembly contains the dedicated sequencer and code converter necessary to operate the microprocessor and all of the audio analog circuitry for tone generation and detection.

1.3.3 Control Assembly 1A1A3

On the Control Assembly 1A1A3 are located the encode switches for tones 3, 4 and 5, which select one of five tone frequencies for each of the three remaining tones

of the transmit cycle. The board also contains the power/internal alarm select switch.

1.3.4 Harness Assembly 1A1A4

The Harness Assembly 1A1A4 provides interconnection between the PC assemblies and the front and rear panel controls, connectors and indicators.

1.4 TECHNICAL SPECIFICATIONS: GSC-902

Power Requirements:	28VDC (Supplied by Transceiver) @ .4 Amps
Audio Interface Requirement:	
Decode Function:	0 DBM 600 Ohms
Encode Function:	0 DBM 600 Ohms
External Alarm:	Normally open contacts, 1 amp, 28 VDC resistive.
Signalling System Format:	5 Tones Sequential
Timing:	64ms per tone, 320ms per call
Tone Frequencies:	
Tone #1	1388 Hz
Tone #2	1562 Hz
Tone #3	1785 Hz
Tone #4	2083 Hz
Tone #5	2500 Hz
Repeat	1190 Hz
Group Alert	Alternating 488Hz/976Hz
Encoding Capacity:	3125 Codes
Individual:	125 Codes

Environmental:	-30°C to +65°C
Humidity:	100% @ 50°C
Shock:	Per MIL-STD-810B, method 516.1 Procedure I, Fig. 516.1.2, Amplitude a Duration C.
Vibration:	Per MIL-STD-810B, method 514.1, Procedure VIII, Curve V.
Enclosure:	Per MIL-STD-108, Table II. (Splashproof).
Dimensions:	(Inches) 2.44H X 7.38W X 10.25D (CM) 6.20H X 18.75W X 26.04D
Weight:	3 Lbs. 4 oz. (1.45 Kgs)

1.5 EQUIPMENT SUPPLIED

The following list of equipment, with appropriate Sunair part numbers, is supplied with the GSC-902 SELCALL unit.

GSC-902 SELCALL Unit	8068001051 Gray
	8068001093 Green
Power Cable Assembly, 6 ft. long	8068002090
Rackmount Kit	8068042059 GREY
	8068042091 GREEN
Operation and Maintenance Manual	8068000500

1.6 EQUIPMENT NOT SUPPLIED

The following list of equipment, with appropriate Sunair part numbers, indicates items which are not supplied but have been made available as compatible equipment for the GSC-902.

Depot Spares Kit, GSC-902	8068901591
Field Module Kit, GSC-902	8068905791

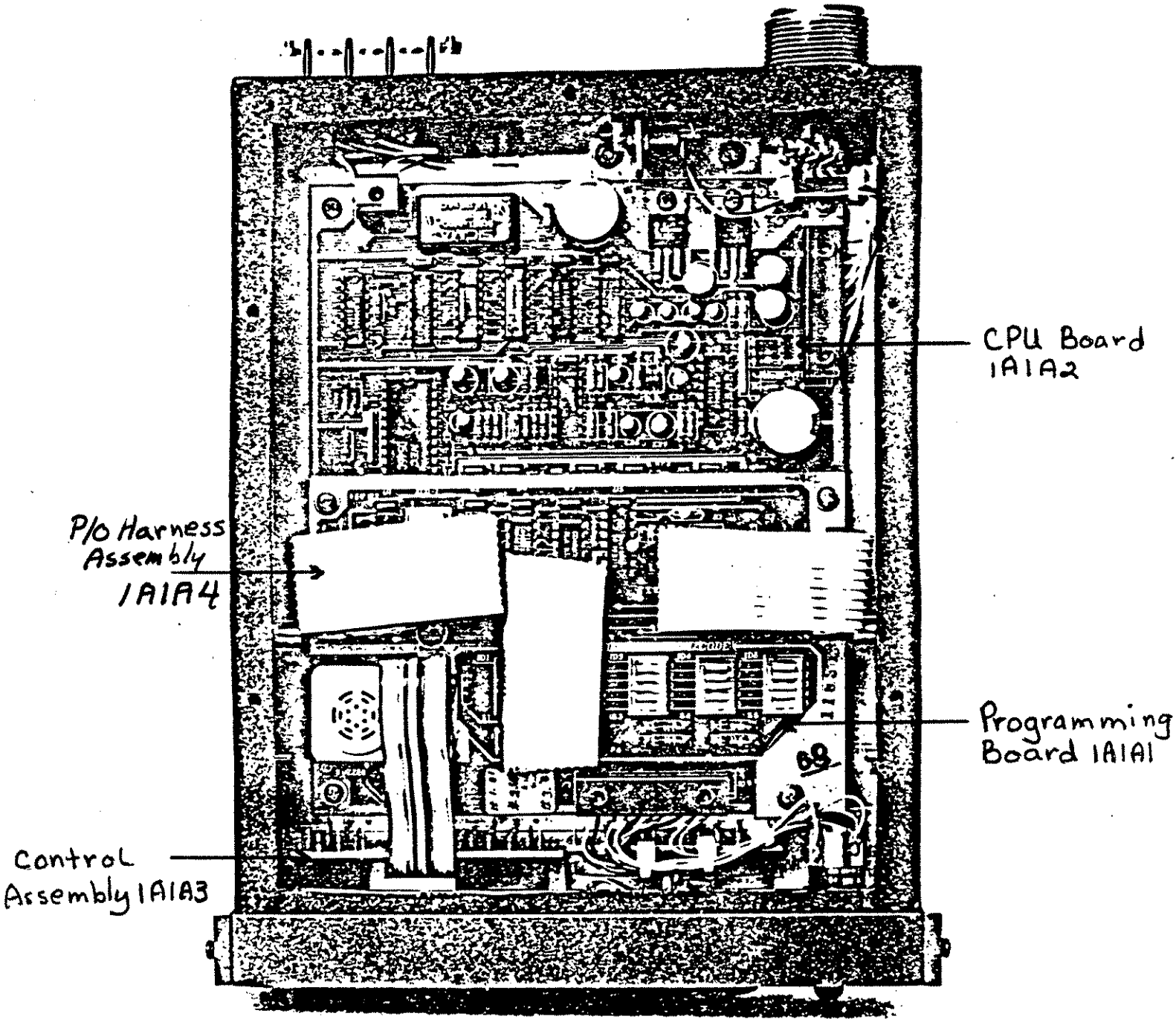

Figure 1.1 Major Assembly Locations

SECTION II

INSTALLATION

2.1 GENERAL

Section II contains all necessary instructions for the unpacking, inspection, and if necessary, reshipping of damaged equipment or parts. In addition, information regarding location mounting considerations and power requirements is also provided. Instructions for equipment interconnect are also provided in this section.

2.2 UNPACKING AND INSPECTION

Unpack and inspect all parts and equipment as soon as received.

NOTE

Be sure to retain the carton and it's associated packing materials should it be necessary to reship damaged equipment.

Do not accept a shipment when there are visible signs of damage to the cartons until a complete inspection is made. If there is a shortage of items or any evidence of damage is noted, insist on a notation to that effect on the shipping papers before signing the receipt from the carrier.

If concealed damage is discovered after the shipment has been accepted, notify the carrier immediately in writing and await his inspection before making any disposition of the shipment. A full report of the damage should also be forwarded to Sunair. Include the following:

(a) Order Number

(b) Model and Serial Number

(c) Name of Transportation Agency

(d) Applicable dates.

When Sunair receives this information, arrangements will be made for repair or replacement.

2.3 RESHIPPING

The shipping container for the GSC-902 has been carefully designed to protect the unit during shipment. The container and its associated packing materials should be used to reship the equipment. When necessary to return equipment to Sunair for warranty or non-warranty repair, an authorization number is required. This number can be obtained from our Product Services Department, Telephone: 305-525-1504, Telex: 51-4443, or Cable: SUNAIR.

If the original shipping carton is not available, be sure to carefully pack each unit separately, using suitable cushioning material where necessary. Very special attention should be given to providing enough packing material around controls, connectors, and other protrusions from the equipment. Rigid cardboard should be placed at the corners of the equipment to protect against denting.

When returning subassemblies or components for repair or replacement, be sure to pack each separately, using suitable cushioning material.

Shipment to be made **PREPAID** consigned to:

PRODUCT SERVICES DEPARTMENT
SUNAIR ELECTRONICS, INC.
3101 SW 3rd Avenue
Ft. Lauderdale, Florida 33315-3389

U.S.A.

Plainly mark with indelible ink all mailing documents as follows:

U.S. GOODS RETURNED FOR REPAIR

VALUE FOR CUSTOMS $100.00

and be sure to mark on all sides of the package

"FRAGILE - ELECTRONICS EQUIPMENT"

NOTE

Before shipping, carefully inspect the package to be sure it is marked properly and is securely wrapped.

2.4 GENERAL INSTALLATION AND MOUNTING INFORMATION

Satisfactory operation of this equipment will depend upon the care and thoroughness taken during installation.

2.4.1 General Installation

(a) Carefully plan SELCALL/transceiver/coupler/antenna locations. Observe the specific requirements given in each applicable manual for each piece of equipment.

(b) If the GSC-902 is being installed in an existing communications network, be sure to plan its location in accordance with the requirements established for the installation.

(c) The installation should be carefully planned beforehand in accordance with the information to follow in Section II.

2.4.2 Base Station Installation

The GSC-902 is equipped with an adjustable mounting bracket. This bracket allows the GSC-902 to be mounted under or on top of a desk, table, operations control panel or similar flat surface. Figure 2.1 shows the applicable outline dimensions of the GSC-902 to assist in the installation of the unit.

The GSC-902 Rackmount Kit (Sunair Part No. 8068042059/91) is designed to mount the unit in a standard 19" rack. The unit, in the rackmounted configuration, requires a panel space of 3.5 inches high. Refer to Figure 2.2 for kit assembly details.

2.4.3 Vehicular Installations

The adjustable mounting bracket in paragraph 2.4.2 is the same one used for vehicular installations. The same mounting considerations apply.

2.5 POWER REQUIREMENTS AND INSTALLATION

Power is supplied to the GSC-902 from the transceiver, see Figures 2.3 and 2.4. The input to the GSC-902 is +28 VDC regardless of the transceivers operation on AC or DC. Figure 2.3 shows the Power Cable hook-up for the GSC-902 with a 900 Series Transceiver. No other connections are necessary for the GSC-902 to operate with the transceiver. Figure 2.4 is the Power Cable Assembly Diagram.

DESIGNATOR	TYPE	SU
P1-P2	MS3106A(18-19 P)	(

REVISIONS

	DATE	ECN	APPROVAL
	5/31/64	8068-007	EC
	12/12/64	8068-010	EC

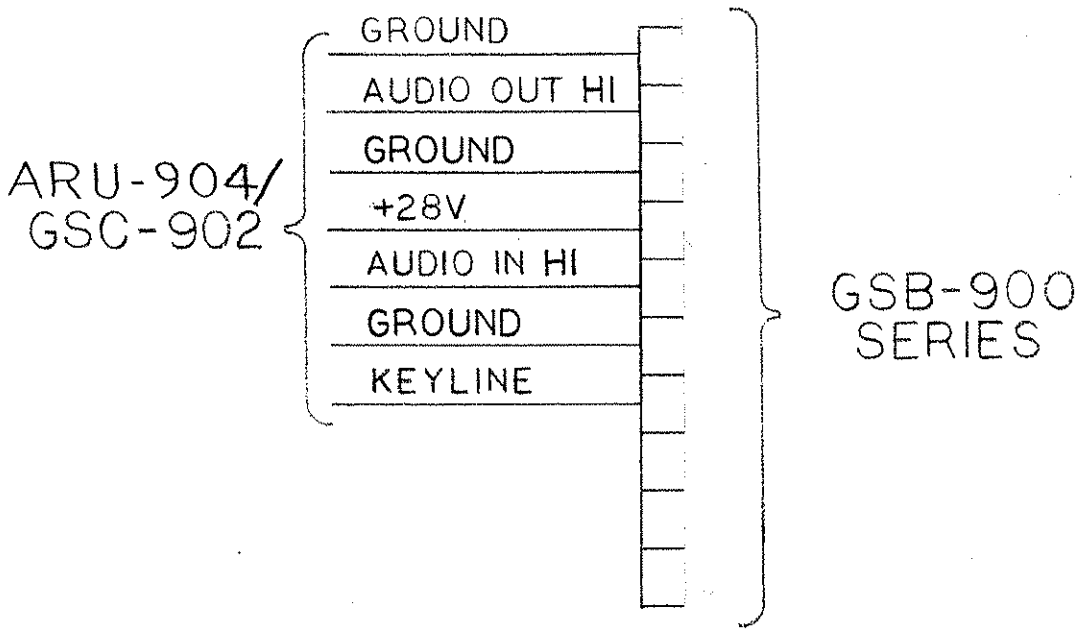

DESCRIPTION

OF MATERIAL

sunair electronics, inc.

3101 S.W. Third Avenue
Fort Lauderdale, Florida
U.S.A. 33315

NEXT ASS

AP

BREA

SIZE		REV.
B	8068002073	B
SCALE	SHEET 1 OF 1	

Schematic p/n 80680016 03
Sheet 1

FIGURE 2.1 Outline Dimensions

DESIGNATOR	TYPE	SUNAIR PART NO.
P1-P2	MS3106A(18-19 P)	0754000001

REVISIONS

REV	DESCRIPTION	DATE	ECN	APPROVAL
A	RELEASED TO PROD.	5/31/84	8068-007	
B	ADD "ARU-904"	12/12/84	8068-010	

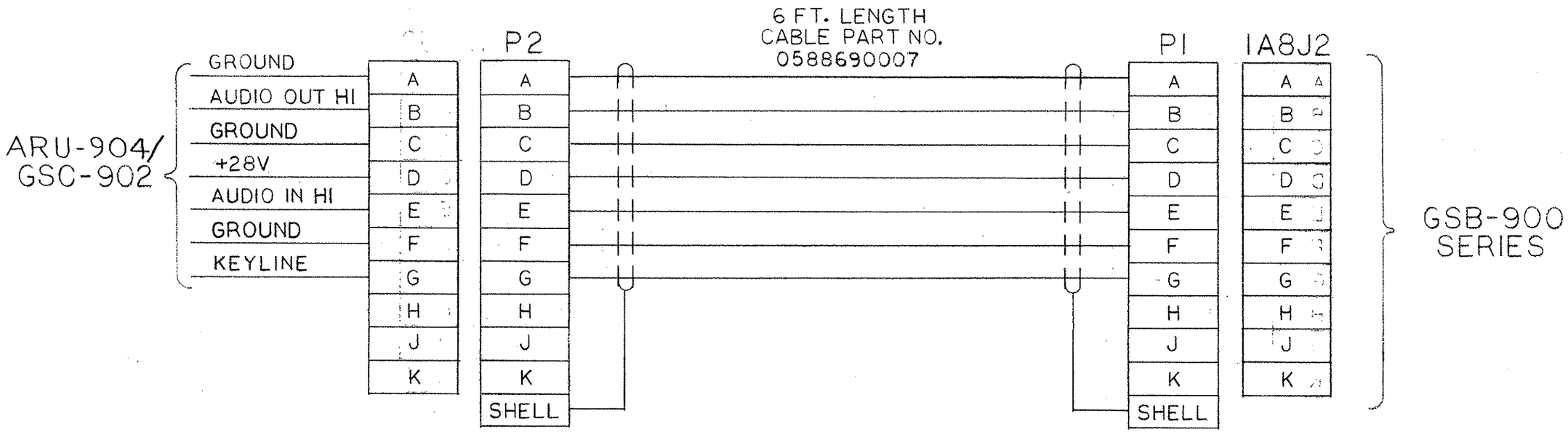

ITEM	REQD	PART NO.	DESCRIPTION

LIST OF MATERIAL

NEXT ASSY	USED ON	NEXT ASSY	FINAL ASSY
APPLICATION		**QTY REQD**	

UNLESS OTHERWISE NOTED
BREAK SHARP EDGES & REMOVE ALL BURRS
ALL DIMS. AFTER SURFACE FINISH

AUTHENTICATION

	NAME	DATE
DRAWN BY	Gary Davis	6/83
CHECKED BY		
PROJECT ENGINEER	S Biena	9/83
APPROVED BY		6/84

UNLESS OTHERWISE SPECIFIED:
DIMENSIONS ARE IN INCHES:

ALL SURFACES TO BE √

FRACTIONS	DECIMALS	ANGLES
±	.xx±.015	± ½°
	.xxx±.005	

DO NOT SCALE DRAWING

TITLE:
CABLE ASSEMBLY, POWER

MATERIAL

FINISH

sunair electronics, inc.
3101 S.W. Third Avenue
Fort Lauderdale, Florida
U.S.A. 33315

SIZE		REV.
B	8068002073	B

SCALE | SHEET 1 OF 1

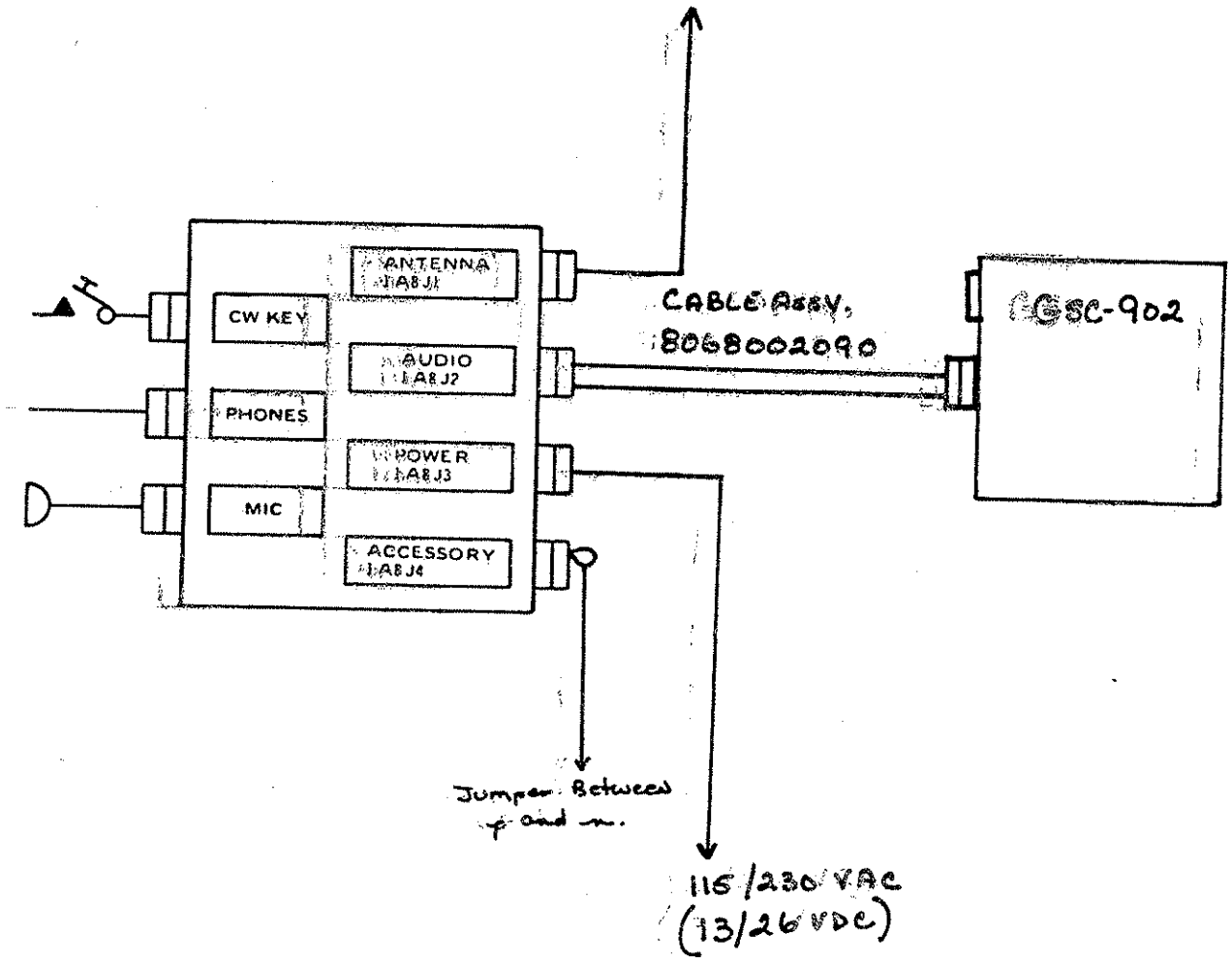

Figure 2.3 GSC-902 Power Hook-UP

SECTION III

OPERATION

3.1 GENERAL

This section provides instruction for proper operation of the GSC-902 SELCALL unit.

3.2 OPERATING CONTROLS AND INDICATORS

The description of all controls, connectors and indicators located internally and on the front and rear panels of the GSC-902 is described in detail in this section. Refer to Figure 3.1 for locations.

1	POWER/ALARM	Controls Primary Power and the alarm. **PWR OFF:** In this position the GSC-902 is disabled, no power applied. **ALM OFF:** This position causes the red CALL/CLEAR Lamp/Pushbutton to light when the unit has been called. The internal alarm is disabled. If the external alarm contacts (see 9) are used, the contacts will close and enable an external alarm, user determined. **ALM ON:** This position causes the red CALL/CLEAR Lamp/Pushbutton to light when the unit has been called. Also the internal Buzzer is enabled and remains so until it is disabled by depressing the CALL/CLEAR Lamp/Pushbutton to clear the called condition.

2	ENCODE SWITCHES	Together they select one of 125 possible encode transmit tone combinations for up to 125 individual stations.
3	ALERT TOGGLE	Momentary toggle when depressed transmits an alternating ALERT tone.
4	CALL/CLEAR PUSHBUTTON	a. When depressed, the GSC-902 will transmit. b. When depressed after a incoming signal has been received, clears the called condition.
5	CALL/CLEAR LAMP	a. Illuminates when the system is transmitting. b. Illuminates when a called condition exists.
6	READY LAMP (Green)	Illuminates when the GSC-902 is READY for operation.
7	POWER LAMP (Amber)	Illuminates when the Power is applied.

3.3 REAR PANEL CONNECTIONS

Refer to Figure 3.2 for locations.

8	POWER	Power connector supplies all power and interconnect between the GSC-902 and the transceiver.
9	ALARM	Provides a set of normally open contacts which may be used for an external alarm, user determined, either visual or audible.

(INTERNAL CONTROLS see Figure 3.3)

10 SELF ID SWITCHES (S1-S5(S101-S105)) Selects Self Identification Code.

3.4 PROGRAMMING SELF IDENTIFICATION

The Programming Board consists of five switches which internally program the Self Identification Code. Self ID switches S1 and S2 are common to both encode and

decode functions. Each unit within the communications network must have these two switches programmed with the same code. Self ID switches S3, S4 and S5 are the units local or self call number. These switches should be programmed as follows:

SELF ID S1 & S2:	All units programmed with the same switch settings.
SELF ID S3, S4 & S5:	Each unit (station) within the network will program these switches with its own SELF ID Code.

NOTE: The programming of the Self ID switches is done with the unit in the **OFF** position. When the GSC-902 is turned on the Self ID selected on the switches will be automatically loaded into the units memory.

3.5 OPERATION

After the Self ID has been loaded, the following steps should be taken for Operation of the GSC-902.

1. Apply power to unit. Amber Power Lamp will illuminate.
2. Wait until the Green READY Lamp illuminates.
3. Select encode tone sequence, on the three front panel tone select switches, for the station to be called.
4. Momentarily push the CALL/CLEAR Lamp/Pushbutton.
5. The red lamp on the CALL/CLEAR Lamp/Pushbutton will illuminate for approximately 500ms indicating that the unit has been keyed and a Tone has been transmitted. After 500ms the red lamp will extinguish.
6. When the GSC-902 receives a response from the called station, the CALL/CLEAR Lamp/Pushbutton will illuminate indicating a "HANDSHAKE" between stations has occurred. If selected, the internal Buzzer will sound. If an external alarm is connected, it will sound.
7. To clear a called condition momentarily push the CALL/CLEAR Lamp/Pushbutton.

8. After clearing the GSC-902, the READY Lamp will extinguish for a period of about 5 seconds. While the Ready Lamp is extinguished, the GSC-902 is disabled. After a 5 second period the Ready Lamp will illuminate and another call may be initiated or received.

3.6 NETWORK OPERATIONS

The GSC-902 is an excellent companion item for any network equipped with Sunair GSB-900 Series Transceivers. Incorporating the SELCALL Unit is accomplished simply by connecting the power cable p/n 8068006090 from the rear of the GSC-902 to the audio connector 1A8J2 at the rear of the GSB-900 Series Transceiver (See Figure 2.3). A Network Operations Plan could be drawn up to assign identification codes to each net member and provide provisions for changes. An example of this plan is shown in Table 3.1.

TABLE 3.1 EXAMPLE OF NETWORK OPERATIONS PLAN

		1	2	3	4	5
STATION LOCATION	STATION CALL SIGN	CODE	CODE	CODE	CODE	CODE
Anchorage AK	CONTROL	13998	14662	19132	29156	78349
Fairbanks AK	Station 1	13997	14661	19155	29318	78336
Seattle WA	Station 2	13877	14530	19221	29330	78410

The example plan shows three stations within a network and code changes which would be accomplished at the direction of the Network Controlling Station or other controlling authority. Using the codes in column 1, and upon initial use, all stations would insure that the first two numbers (S1 and S2) of their selective calling codes are set for the numbers 1 and 3. S3, S4 and S5 will be set by each station for the codes of their own station. EXAMPLE: For CONTROL, the S3, S4 and S5 codes will be set for 9, 9, and 8. Remember, the first two numbers must be common to ALL net

member stations. Should Station 1 wish to call Station 2, Station 1 would dial up the numbers 877 on the front panel of the GSC-902 and momentarily push the CALL/CLEAR Lamp Pushbutton. The GSC-902 will then selectively call Station 2 on the frequency in use.

A visual alarm (CALL/CLEAR Lamp/Pushbutton) will alert the operator that a "HANDSHAKE" has occurred. Additionally, if selected, an audio alarm will also be activated. Both alarms can be remoted to another operating location, user determined.

If the Network Controlling Station, or other controlling authority wishes to alert the network of impending high precedence traffic, roll call, or other traffic for all stations, the Alert Toggle switch is depressed. An alternating warbling tone will be transmitted on the frequency in use until the toggle switch is released.

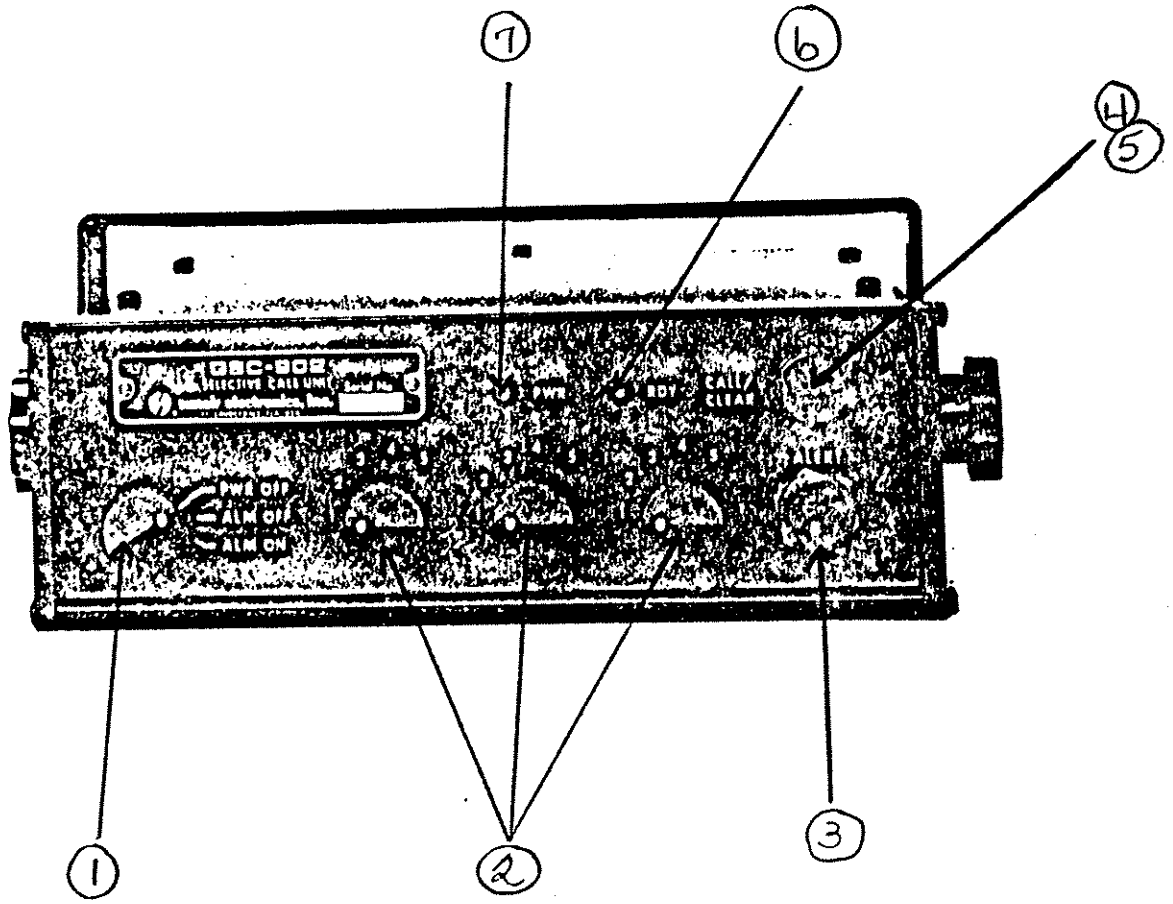

Figure 3.1 Front Panel Controls and Indicators

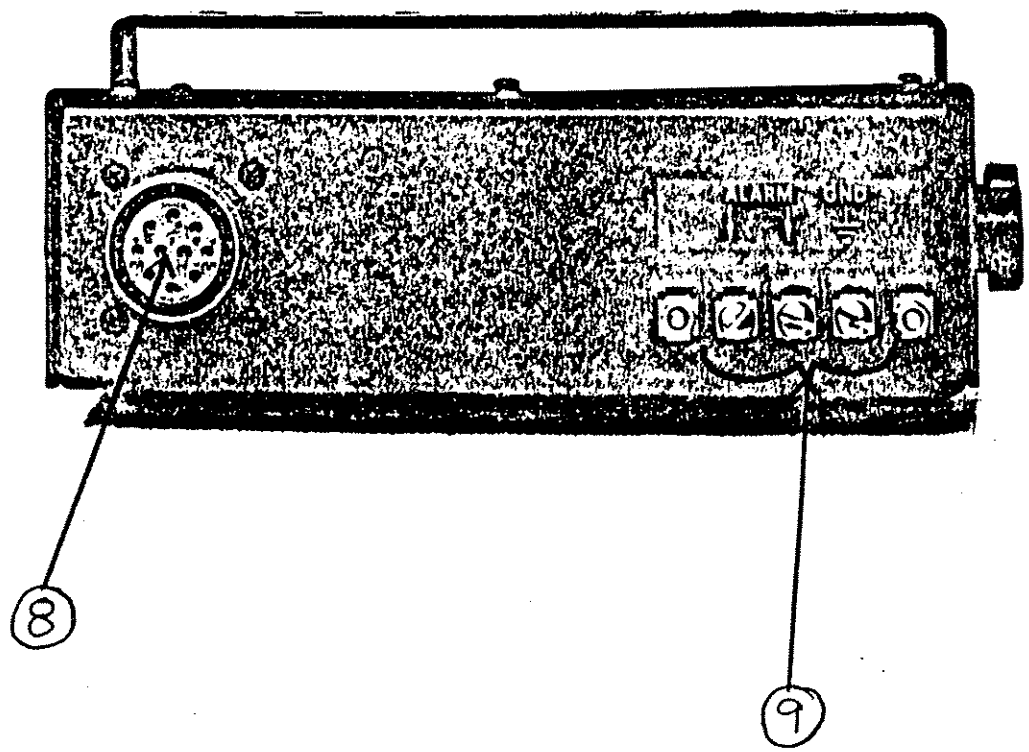

Figure 3.2 Rear Panel Connections

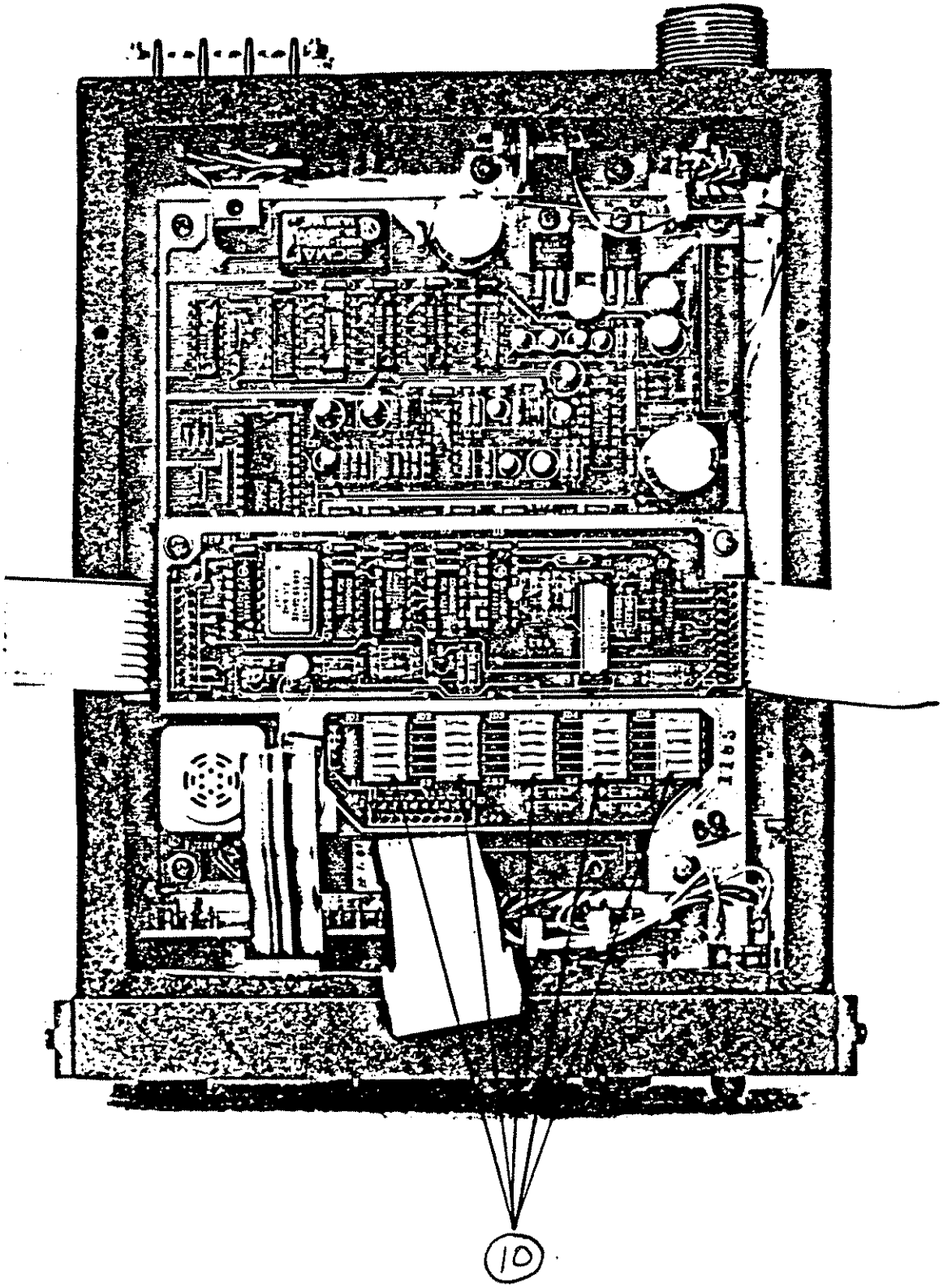

FIGURE 3.3 INTERNAL CONTROLS

SECTION IV

THEORY OF OPERATION

4.1 GENERAL

The Theory of Operation for the GSC-902 SELCALL unit will be discussed by covering the two major boards: the Programming Board 1A1A1 which includes all circuitry for loading Self ID's and the CPU Board 1A1A2 which contains the microprocessor and its associated circuitry. Figure 4.1 is the Overall Block Diagram of the GSC-902 SELCALL unit.

4.2 PROGRAMMING BOARD 1A1A1

Refer to Figure 5.4

The clock input for U218 is generated by U106 on the Programming Board 1A1A1. U106 is a hybrid crystal oscillator operating at a frequency of 2 MHz. The output pin 8 of U106 is fed to U102 pin 10 and is divided by 4 to produce a 500 KHz clock frequency. The 500 KHz on U102 pin 7 is fed to J8-3 on the CPU Board 1A1A2 and feeds pin 42 of U218 the Clock input. The 2 MHz output of the Crystal Oscillator U106 also feeds pin 9 of U101 where it is divided by 10 to produce a 200 KHz output to P8-4. P8-4 is connected to J8-4 on the CPU Board and is fed to U219 pin 9 the Programmable Divider. Note: The 200KHz serves as the fundamental reference frequency for the tones generated in the GSC-902.

4.2.1 Dividers U102, U103

Besides dividing the 2 MHz oscillator by 4 for use by U218, U102 also divides the 2 MHz by 2048 and 4096. The 976 Hz on pin 15 is fed to U104C pin 9 which is part of the Alert Tone Switch Enable consisting of U104 and Q102. The 488 Hz on pin 1 is fed to U104A pin 1 and U103 pin 10.

U103 divides the 488 Hz signal by 128 and 16. The 3.8 Hz from pin 4 is fed to the base of Q102 and pin 2 of U104A. The 30.5 Hz from pin 5 is fed to U104B pin 5, the Binary Up Counter.

The audio from CR101 and CR102 is sent to U104D to produce an alternating audio alert tone. See paragraph 4.3.15. The 30.5 Hz Clock Out from U104B is fed to U204A for use by EPROM's U205 and U206.

4.3 CPU BOARD 1A1A2

4.3.1 Microprocessor U218

The CPU Board contains a µPD 546 microprocessor, U218. U218 is the primary control for all of SELCALL's functions. U218 is responsible for controlling the encoding and decoding circuitry for the selective calling program of the GSC-902. U218 is fed by EPROM (Erasable Programmable Read Only Memory) U211, the Code Converter, which is responsible for all Decode Command functions and Encode Tone functions. There are two other EPROM's employed on the CPU Board and they are U205 the Command Function Simulator, which is responsible for U213's Clock Strobe Data and Command Entry functions for U218, and U206 which is responsible for Switch Select functions.

4.3.2 Keyboard Level Translator U212

Four 5 VDC logic inputs are fed from U211 to U212 B, C, E and F. An additional two 5 VDC logic inputs are fed to U212 A and D from U205. U212 converts these six 5 VDC logic levels to +10 VDC signals for use in U213 the Crosspoint Switch.

4.3.3 Crosspoint Switch U213

Code Converter U211 produces four outputs through U212 B, C, E and F to U213 inputs A, B, C and D. The two logic outputs from U205 the Command Function Simulator are fed through U212 A and D to U213 inputs D IN, and S(STR). U213 simulates a keyboard for the inputs to U218. U213 contains sixteen switches arranged in four columns and four rows. See Figure 4.2. To simulate the closure of the number 5 switch, for example, PE0 U218 pin 12 to PA0 U218 pin 33, must close. To accomplish this, U213 changes the A,B,C, and D inputs from U212 as follows: A-High, B-Low, C-High, and D-High. While this information is on A, B, C and D, U205 moves a High through U212A into the D IN (DATA IN) pin 2 of U213. Next U205 places a High through U212D onto the S input pin 7 of U213. The High on STR strobes the High on D IN onto the switch addressed by A,B,C, and D which in this case is Y4 to X1. Next U205 moves a Low onto the STR line. After the period of 34 msecs U205 moves a Low onto the D IN line leaving the address on A,B,C, and D High. U205 then moves a High onto the STR line which in turn strobes the Low on the D IN line opening the Y4 to X1 switch closure. Next U205 moves a Low onto the STR line for a period of 34 msecs. After a 34 msec waiting period, U213 is ready to accept the next address for the next switch closure.

4.3.4 U218 Timing

The microprocessor U218 accomplishes the sampling of a simulated switch closure by producing a +10 volt pulse, 1.3 msecs in duration continuously on each of PE3, PE2, PE1 and PE0 pins 12 through 15 lines consecutively. U218 examines it's inputs PA0, PA1, PA2, and PA3 pins 33 through 36 respectively each time it outputs a pulse on PE3, PE2, PE1, and PE0.

4.3.5 Sequence Generator U205, U206

U205 acts as a dedicated sequencer for command functions to U218. U206 selects the proper Self ID switch settings during power up. When transmit is initiated, U206 selects the first two Self ID switches then selects the encode switches on the front panel.

4.3.6 Code Converter U211

U211 reads information from U205 via U207 and U208 (tri-state buffers). U211 also decodes the switch position information received from the front panel select switches and passes this information to the microprocessor U218 via U212 and U213.

4.3.7 Microprocessor Reset

The RESET of U218 is generated by the Programming Board. RESET is connected to the collector of Q101 (RESET inverter transistor) on the Programming Board. Q101 converts <u>RESET</u> to RESET which is a +10 VDC High which lasts for approximately 50 msecs before going Low. RESET is fed to pin 7 of U218 and holds U218 in the RESET condition while power up transients dissipate. When RESET goes Low after 50 msecs, U218 will begin to execute it's internal program. RESET is also generated when the system is cleared after a call has been received, or on restoration of power after a momentary power failure.

4.3.8 CALLED Output

The CALLED OUTPUT is generated by U218 and fed out pin 18. This pin is normally Low until one of two operations occur:

a. The GSC-902 detects a call from another unit.

b. After initiating a call, a returned "Handshake" is received.

When either of these conditions exist, a +10 VDC High is placed on pin 18 of U218. This High is fed to U224 B and C pins 2 and 3. U224 inverts the High to a Low

activating relay K201 which causes a contact closure for the external alarm. The Low on U224B pin 15 is also fed to J5-2 and illuminates the CALLED Lamp. The High from pin 18 U218 is also fed to pin 4 of U210D and inverted to a Low which is connected to U214A pin 1 allowing the Call/Clear button to act in the Clear function and cause a system reset and reload.

4.3.9 TX

U218 produces a +10 VDC High output on pin 30 each time it receives a SEND key input via U203D. The TX High on pin 30 of U218 is connected to driver U224 D and E pins 4 and 5. U224D inverts the High to a Low and sources the Keyline thus keying the transmitter. U224E also turns on the XMIT Lamp.

4.3.10 PH0, PH1, PH2, PH3

The outputs designated as PH0, PH1, PH2 and PH3 are used by U218 for tone generation and detection. Each time a keyboard entry is made via U213, or a transmit or receive routine is initiated, either by pushing the Xmit button or a receive routing after reception of Tone 1,the outputs PH0,PH1,PH2,PH3 change state to correspond with the code indicated by the closure made, or the internal programming of the Self I.D. or the transmit code switch. The four outputs are connected to the Programmable Divider U219. The PH3 output from U218 is fed to U221C pins 8 and 9. U221 inverts PH3 and feeds $\underline{PH3}$ to pin 11 of U219. U219 pin 1 is fed to U220 pin 1 the Fixed Divider. U220 divides by 8 the frequencies generated by U219 and produces the result on pin 9. U220 pin 9 is fed to NOR gate U221 A and D pins 2 and 13. During a transmit period, the TONE EN output of U218 pin 19 goes Low enabling the tones from U221D pin 11 to be fed to U210A pin 1, through RP208 and it's associated filter components to the Encoder output J1 pin 6.

4.3.11 Transmit Timing

During a Transmit routine, after the XMIT pushbutton on the front panel has been depressed, the following sequence of events will take place:

1. Sequential entry of routine initiated.
2. Send entry made.
3. Keyline enabled. (approx. 200msec before 1st tone)
4. Tone 1 sent. (64 msec)
5. Tone 2 sent. (64 msec)
6. Tone 3 sent. (64 msec)
7. Tone 4 sent. (64 msec)
8. Tone 5 sent. (64 msec)
9. Keyline disabled.
10. Decoder via U218 switches back to Tone 1. Will remain on Tone 1 awaiting "Handshake".

4.3.12 Receive Timing

During a Receive routine the following sequence of events will take place:

1. Power on routine for receive.
2. Monitors for Tone 1.
3. If Tone 1 detected switches to Tone 2.
4. If Tone 2 detected switches to Tone 3.
5. If Tone 3 detected switches to Tone 4.
6. If Tone 4 detected switches to Tone 5.
7. If Tone 5 detected switches to hetrodyne.
8. If hetrodyne detected switches to Abort Routine.
9. If steps 3,4,5,6, and 7 are accomplished, a "Handshake" routine will be initiated and the Local number returned.

4.3.13 Switched Filter/Audio Decoder

See Figure 4.3

At all times except when U218 is in a transmit condition or has detected the first tone during a receive routine, U218 will produce the combination on PH0 thru PH3 equivalent to the first tone of the Self ID Selective Calling Code. This causes the Switching Cap Control, the Audio IN Detector Amplifier, the Switching Cap Amplifier and the Tone Detector/Comparator to be continuously ready to detect the first tone of the Self ID number if another station should call. The NOR gate decoder U221, U222 applies C238 thru C241 of the Switching Cap Control U223 to the line joining the Audio Amplifier U217B input to the Switching Cap Amplifier. The output of U222 pins 4,10,3, and 11 produce sequential Highs with each output being High for one fourth of the period of the first tone of the Self ID. The sequential High on U222 pins 4,10,3, and 11 respectively, applies C239 followed by C241 followed by C240 and finally by C238 to U217B-5 for one fourth of the period of the first tone of the Self ID. This is accomplished by the Switching Cap Control U223, which is a four section analog switch.

The following paragraph is a description of how the Switching Cap Control, Audio IN Detector Amplifier, Switch Cap Amplifier, and Detector respond to a call from another station.

All receive audio from the transceiver enters the CPU board on J1 pin 7, DECODER IN. The DECODER IN is connected to the Audio IN Amplifier U217A pin 3. If the received audio at DECODER IN contains the first tone of the units Self ID, the signal will be fed to pin 5 of U217B after being passed by the Switching Cap Amplifier which consists of R215, C223, and C238 thru C241. Because the capacitors are synchronously applied to pin 5 of U217B, each will charge up or down from the

+5 volt reference. When an audio signal is passed, it will be fed to U217C the Audio Detector Amplifier where the signal is rectified and fed to the Tone Detector U217D which acts as a voltage comparator. When the voltage applied to U217D pin 12 exceeds the voltage on U217D pin 13, the output pin 14 will be switched High. This High is fed to U218 pin 40 as an acknowledgment of the detection of the first tone. This same process is repeated for each of the remaining tones.

4.3.14 QUENCH

See Figure 4.4

U218 uses a +10 VDC output pulse on pin 24 for approximately 4 ms which shorts the switching capacitors together and via U224A discharges the detection voltage at U217D pin 12. This occurs after the proper detection of each tone. The first tone of the Self ID must be detected within the first 30 msec of the 60 msec first tone sent by the calling unit. This is because U218 waits approximately 90 msec before sampling for the second tone. If the first tone is detected in the second 30 msecs of its duration, waiting 90 msecs will force U218's sample for the second tone to occur when the third tone is being sent since each tone is sent for approximately 60 msecs. After waiting 90 msec to sample for the second tone, U218 waits 60 msec each before sampling the third, fourth, and fifth tones. Once the fifth tone of the Self ID is detected, U218 leaves PH0, PH1, PH2, and PH3 set in the code to detect the fifth tone again. U218 waits approximately 30 msec and issues a QUENCH pulse to assure that the tail of the fifth tone has not left a bias charge on C226. U218 then waits another 60 msecs and re-samples for the fifth tone. This procedure determines whether or not the first test for the fifth tone may have detected a hetrodyne signal rather than the incoming fifth tone. A hetrodyne signal in the receiver passband will produce a steady tone in the received audio. This final sample must be false or the detection is aborted. If

the final sample is false, U218 will respond by lighting the CALLED alarm. U218 will then enter a normal SEND routine and will answer the calling station by transmitting its own Self ID to the calling station as a "Handshake".

In a Receive Calling Code condition these same paragraphs may be applied to the operation of the Encoder when receiving a handshake back from a station being called. The only difference relative to receiving a handshake reply from a station being called is that the selective calling code manipulated is not the Self ID. Instead it is the selective calling code of the station being called.

NOTE

Anytime during the reception of a selective calling code as a call or handshake reply, all samples of tones must be true except the last one. The last sample which is the one for a hetrodyne tone must be false. If any sample except the last one is false, U218 will abort the sample routine and issue the code on PH0, PH1, PH2, PH3 for the detection of the first tone of its SELF ID.

4.3.15 ALERT Function

The ALERT Function is actuated by depressing the GROUP ALERT switch (S101) on the front panel. This makes a switch closure to ground via J5-10. This Low is sent to U104D pin 13 of the Programming Board allowing an alternating audio signal to pass to P7-7. This signal is connected to ALERT TONE IN J7-7 on the CPU Board, and fed through U210E pin 15 to the Audio Output Filter RP208. The Low caused by the S101 switch closure is also fed through the line driver U224 F and G to key the radio.

4.3.16 Power Supply

The +28 VDC received from the transceiver via J1 pin 9 is fed to the Front Panel Control Board power switch S101A J3-9 and 10. From the switch, power is routed through J1-1 to U215 the +10 VDC regulator and U216 the +5 VDC regulator. Each of these regulator circuits supply the necessary voltages to their respective circuits.

4.4 CONTROL ASSEMBLY 1A1A3

Refer to Figure 5.5

The Control Board Assembly contains the switches used to cotnrol Power On/Off, Alarm On/Off and the remaining three transmit tones not set by the Self ID Switches.

TONE	U213 Address INPUT	U213	U218	U219	U219	U221
	PIN	CLOSURE	CONTACT CLOSURE	PIN 11 6 5 4 3	PIN 1	PIN 13
	6 5 4 3 A B C D			PB1 PB4 PA3 PA2 PA1	FREQ Hz	FREQ Hz
1	0 1 1 0	X_3 - Y_2	PA2 - PE2	1 0 0 1 0	11111	1389
2	0 1 1 1	X_3 - Y_4	PA2 - PE0	1 0 0 0 0	12500	1563
3	1 0 0 1	X_2 - Y_3	PA1 - PE1	0 1 1 1 0	14286	1786
4	0 0 1 0	X_1 - Y_2	PA0 - PE2	0 1 1 0 0	16666	2033
5	0 0 1 1	X_1 - Y_4	PA0 - PE0	0 1 0 1 0	20000	2500
R	INTERNALLY Selected by U218	—	—	1 0 1 0 1	9524	1190
COMMAND						
PWR	1 1 1 0	X_4 - Y_2	PA3 - PE2	1 0 1 0 1	9524	1190
ENTER	1 1 1 1	X_4 - Y_4	PA3 - PE2	1 0 1 0 0	10000	1250
STORE	1 0 0 1	X_2 - Y_3	PA1 - PE1	0 1 1 1 0	14826	1786
LOAD	1 1 0 1	X_4 - Y_3	PA3 - PE1	1 0 0 1 1	10526	1316
SEND	Closure Made by U203-8	—	PA0 - PE3	0 1 0 0 1	22222	2778
HANDSHAKE ENABLE	* Read on PWR UP via CR201	—	PB2 - PE0	—	—	—

Table 4.1 INPUT Hex Code FOR THE Programmable Divider U219

Schematic P/N 8068000062

Figure 4.1 Overall Block Diagram

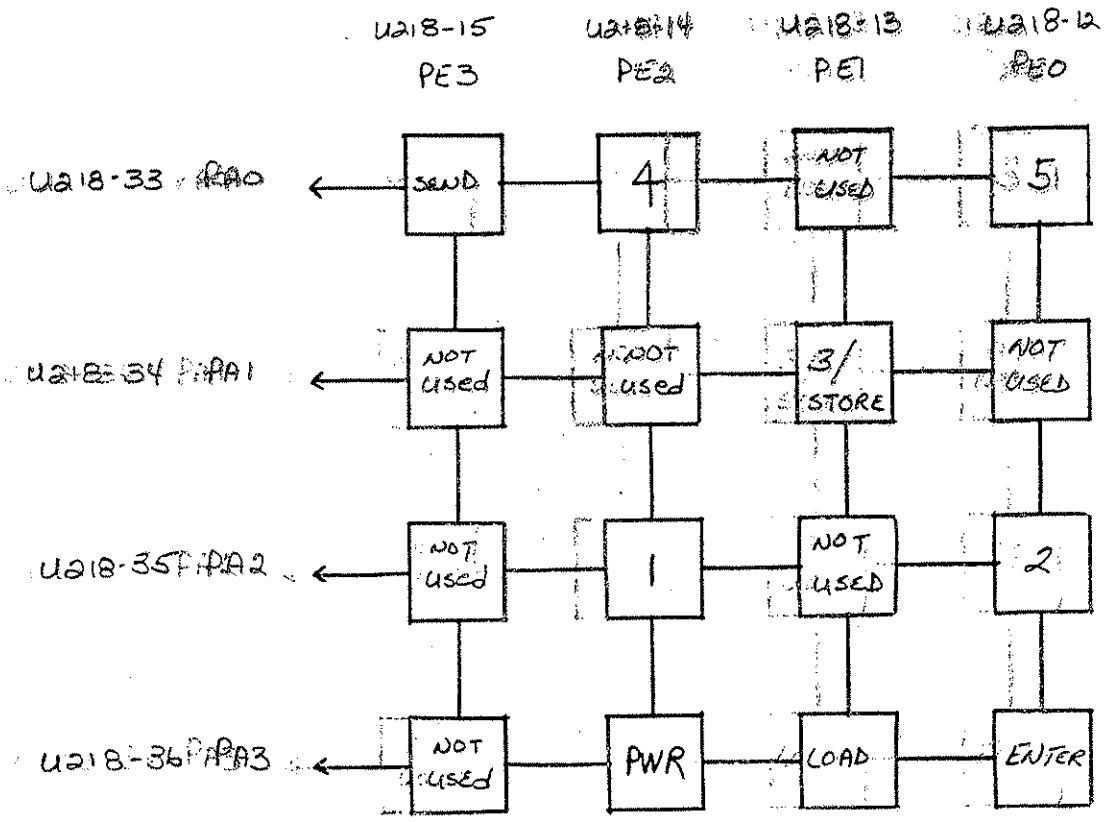

FIGURE 4.2 U218 Simulated Keyboard Inputs From U213

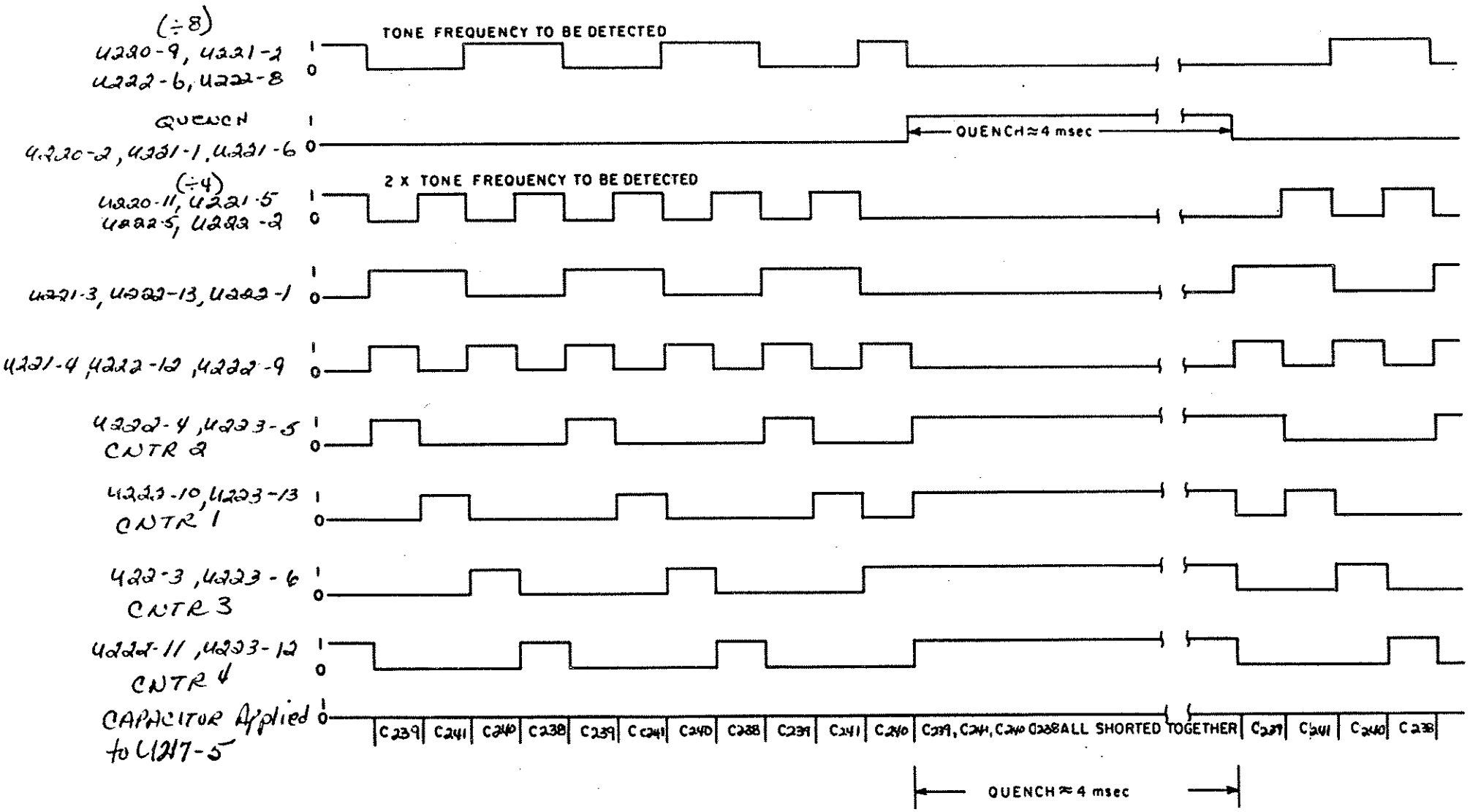

FIGURE 4.3 Timing Waveforms U221, U222

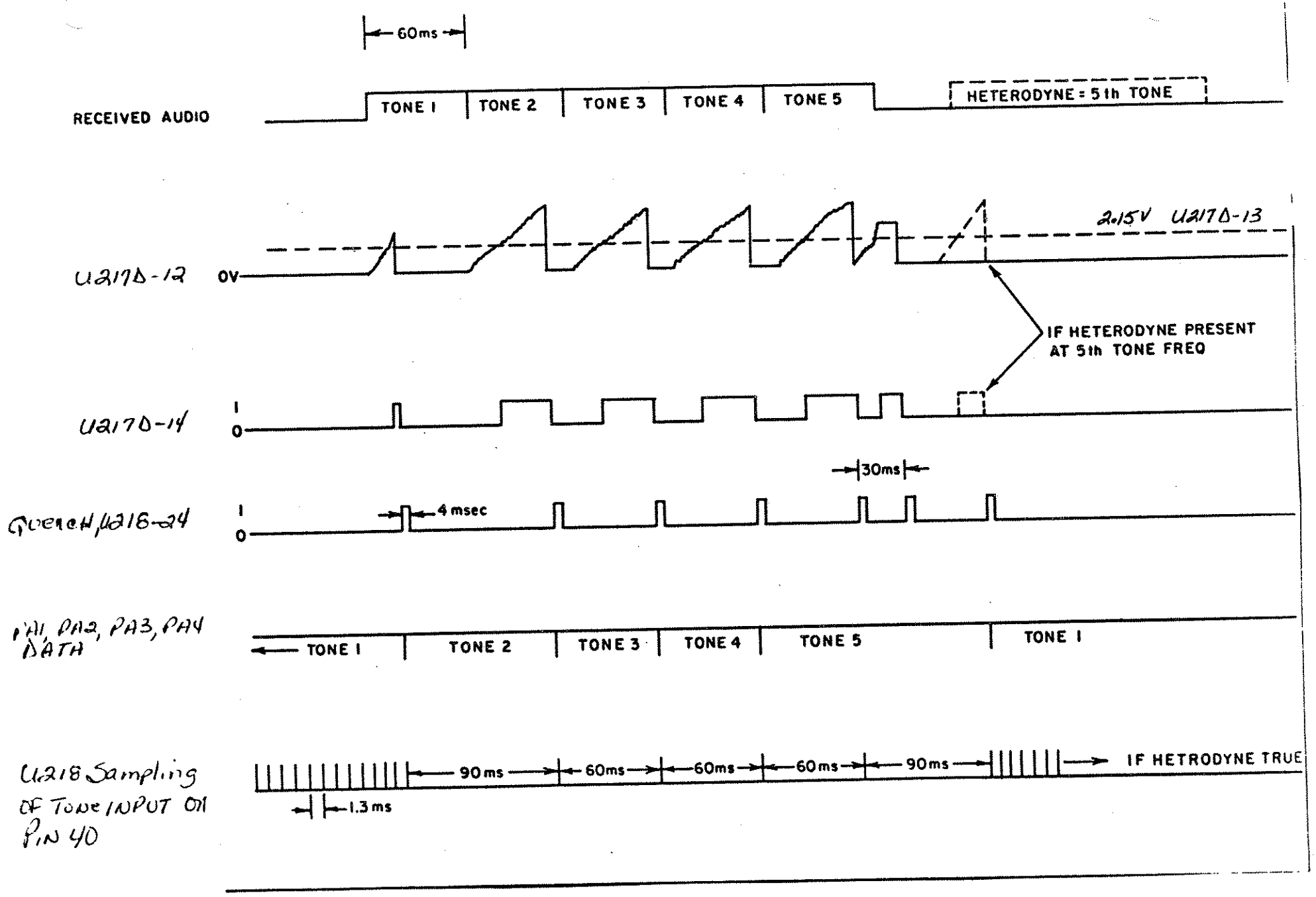

FIGURE 4.4 Timing for Tone Detection

SECTION V

MAINTENANCE AND REPAIR

5.1 GENERAL

This section provides procedures for the maintenance and evaluation of the performance of SELCALL.

5.2 DISASSEMBLY/ASSEMBLY

Disassembly should be only to the extent necessary to accomplish the repair or replacement of a defective component. Procedures for disassembly are contained in this section.

Assembly is necessary only to the extent that disassembly was performed. Procedures for assembly are the same as those for disassembly except in the reverse order.

5.2.1 Cover Removal

a) Remove 5 screws on top of unit.

b) Remove 3 screws on each side of unit.

c) Lift cover off.

5.2.2 Programming Board 1A1A1

a) Remove cover per 5.2.1.

b) Lift Flex Cables from Programming Board, carefully.

c) Remove 4 screws holding Programming Board in place.

5.2.3 CPU Board 1A1A2

a) Remove cover per 5.2.1.

b) Remove Programming Board 1A1A1 if desired per paragraph 5.2.2.

c) Remove P2, P5 and P1.

d) Remove 5 screws, two of which are through U215 and U216.

e) Lift CPU [redacted] Board out.

f) Carefully remove P4 from board.

5.3 CLEANING/INSPECTION

Wipe the exterior of the SELCALL unit with a lint-free cloth dampened with isopropyl or denatured alcohol. Remove any foreign matter from the interior using a soft bristled brush and/or clean, dry, compressed air of not more than 15 PSI.

5.3.1 Inspection

A routing visual inspection should be performed regularly and any resultant corrective action should be taken.

5.4 REPAIR/REPLACEMENT

The repair or replacement of damaged and defective parts involves standard service techniques. Carefully examine the equipment to determine the correct technique required to effect the repair.

5.5 PERFORMANCE TESTS

The following tests will provide performance data as well as aid in determining specific problems of this equipment.

5.5.1 Test Equipment

The following test equipment or equivalent is required to perform the procedures in this section.

a) Digital VOM - Hickock MX333.

b) Frequency Counter - HP-5382A.

c) Oscilloscope - Tektronix 465.

5.5.2 Preliminary

Refer to Figure 5.1.

a) Connect AC Power to the Transceiver via 1A8J3. Using coax cable, connect the SELCALL unit to the Transceiver's Audio connector 1A8J2.

b) Prepare the test set-up shown in Figure 5.1.

5.5.3 Static Voltage Checks

Figures 5.2 and 5.3 are to be referenced for IC voltage tests.

5.5.4 Troubleshooting Chart

The following is a chart of possible problems, location of possible defective components and suggested solutions. Refer to Figure 5.????????.

TROUBLE	PROBABLE CAUSE	REMEDY
1. Unit Inoperative No Power Lamp.	a. Interconnect cable +28V. b. Defective ON/OFF switch. c. U215 or U216 defective.	a. Check cable. b. Repair or replace. c. Replace.
2. Unit Operative No Power Lamp.	a. LD2 or associated circitry defective.	a. Replace defective component.
3. Unit Operative No Ready Lamp.	a. LD1, U210E or associated circuitry defective.	a. Replace defective component.
4. Unit does not operate No Ready Lamp.	a. U106, U102, U103, U104, U105 defective.	a. Replace defective component.
5. Unit will not transmit code (Operates correctly when called.)	a. U103B, U102, S2, S3, S4 defective.	a. Replace defective component.
6. ALERT Function does not operate, Transmit Lamp comes on.	a. U104, U210E or associated circuitry defective.	a. Replace defective component.
7. ALERT Function does not operate, no Transmit Lamp.	a. U224F, U224G defective.	a. Check IC's and associated circuitry. Replace defective component(s).
8. Unit transmits but does not acknowledge handshake.	a. U217, U223 defective.	a. Check IC's and associated circuitry. Replace defective component(s).
9. Unit does not transmit, Transmit Lamp illuminates.	a. U210D, U224D, U218 defective.	a. Check IC's and associated circuitry. Replace defective component(s).

10. Buzzer does not operate.	a. BZ201, CR208, U224B defective.	a. Repair or replace.
11. External Alarm inoperative.	a. K201, U224C defective.	a. Repair or replace. Check associated circuitry.
12. Unit "Hangs Up" on power up, no Ready Lamp.	a. U204, U205, U201 defective.	a. Check IC's and associated circuitry. Replace defective component(s).

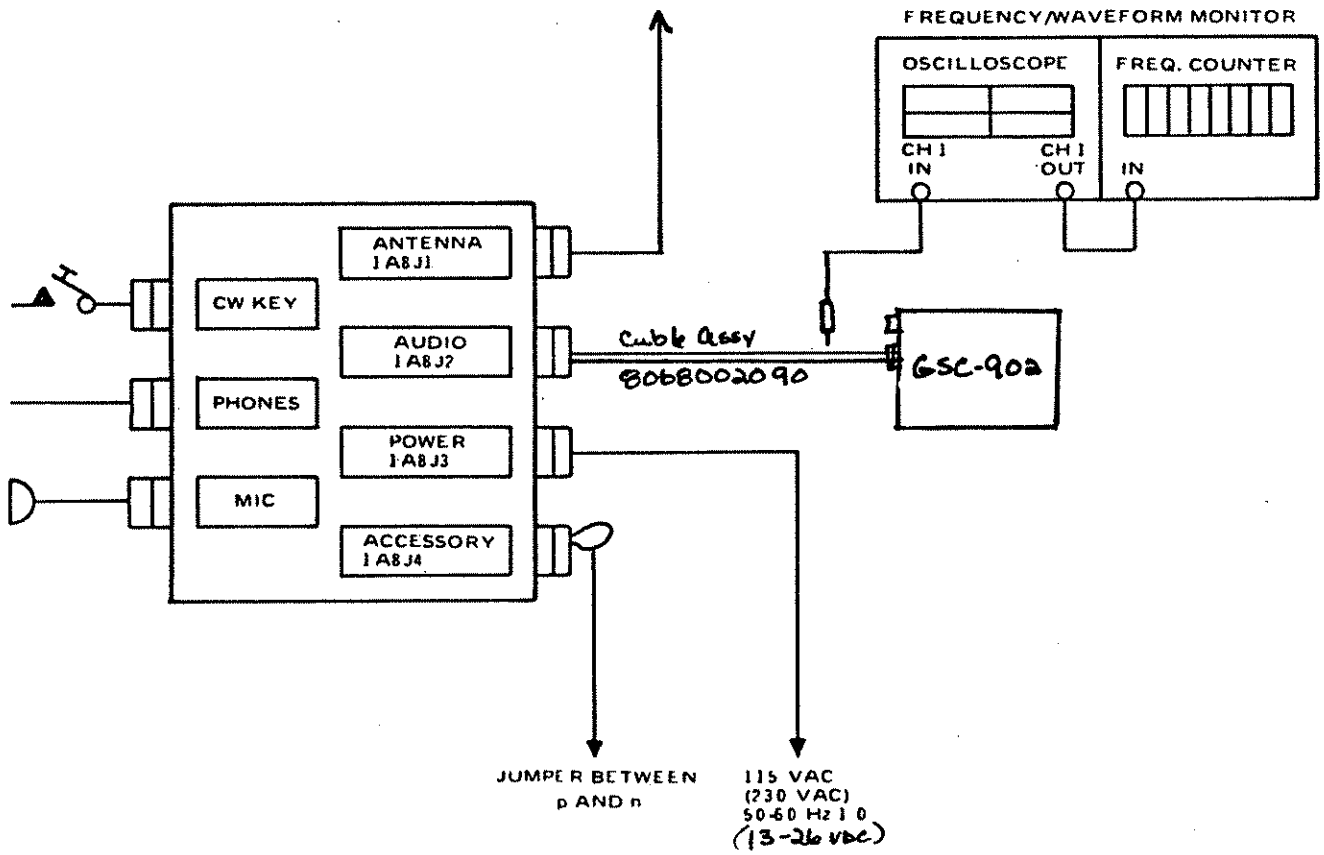

Figure 5.1 STATIC Voltage Check TEST SETUP

PROGRAMMING BOARD 1A1A1 STATIC VOLTAGES AT POWER-UP

PIN #	1	2	3	4	5	6	7	8	9	10	11	12	13	14	15	16	E	B	C
U101	200 kHz 10VPP	0	0	10	0	10	10	GND 0	2 MHz 10VPP	0	0	0	0	0	0	VCC 10			
U102	488 Hz 10VPP	0	0	0	0	0	0	GND 0	0	2 MHz 10VPP	0	0	0	0	976 Hz 10VPP	VCC 10			
U103	0	0	3.8 Hz 10VPP	30.5 Hz 10VPP	0	0	0	GND 0	0	488 Hz 10VPP	0	0	0	0	0	VCC 10			
U104	488 Hz 10VPP	3.8 Hz 10VPP	488 Hz 10VPP	0	30.5 Hz 10VPP	10	GND 0	3.8 Hz 10VPP	976 Hz 10VPP	976 Hz 10VPP	0	488-976 Hz 10VPP	5	VCC 10					
U105	5	0	5	0	0	5	GND 0	5	0	5	0	5	0	VCC 5					
U106							GND 0	2 MHz 10VPP						VCC 10					
Q101																	0	0	0
Q102																	0	3.8 Hz .7VPP	3.8 Hz 10VPP

FIGURE 5.2 STATIC Voltage Check - Programming Board 1A1A1

CPU CARD 1A1A2 STATIC VOLTAGES AT POWER-UP

PIN#	1	2	3	4	5	6	7	8	9	10	11	12	13	14	15	16	17	18	19	20	21	22	23	24	25	26	27	28	29	30	31	32	33	34	35	36	37	38	39	40	41
U201	5	0	10	GND 0	0	0	0	VCC 5																																	
U202	0	5	0	0	0	5	0	GND 0	0	0	0	0	0	5	0	VCC 5																									
U203	0	0	0	0	0	0	GND 0	0	0	0	159 Hz 10VPP	0	0	VCC 10																											
U204	0	5	5	5	5	5	0	GND 0	0	5	5	5	0	0	0	VCC 5																									
U205	0	5	0	0	0	0	5	5	5	5	5	GND 0	5	5	5	5	5	0	0	0	0	0	0	VCC 5																	
U206	0	5	0	0	0	0	5	5	5	5	5	GND 0	5	5	5	5	5	0	0	0	0	0	0	VCC 5																	
U207	0	5	5	5	5	5	5	GND 0	5	5	0	0	5	5	0	VCC 5																									
U208	5	5	5	5	5	5	5	GND 0	5	5	0	0	5	5	5	VCC 5																									
U209	0	5	5	5	5	0	GND 0	0	5	5	5	5	0	VCC 5																											
U210	0	0	0	0	VCC 5	5	0	GND 0	28	28	0	0	5	5	10	10																									
U211	0	0	0	5	5	5	5	5	5	5	0	GND 0	0	0	0	5	0	0	0	0	0	0	0	VCC 5																	
U212	VCC 5	10	5	0	0	0	0	GND 0	5	10	5	10	5	0	0	VCC 10																									
U213	0	10	0	0	10	0	0	0	GND 0	159 Hz 10VPP	159 Hz 10VPP	0	0	159 Hz 10VPP	0	VCC 10																									
U214	5	5	10	GND 0	0	0	0	VCC 5																																	
U215	24 14	GND 0	VCC 10																																						
U216	VCC 10	GND 0	5																																						
U217	5	5	5	VCC 10	5	5	5	5	5	5	GND 0	0	2.4	0																											
U218														159 Hz 10VPP	159 Hz 10VPP	10	0	0	10	VCC 10	10	0	0	0	10	0	10	0	0	0	10	0	0	0	0	0	10	0	159 Hz 10VPP	0	GND 0
U219	11111 Hz 10VPP	0	0	10	0	0	10	GND 0	200 KHz 10VPP	0	10	0	0	0	0	VCC 10																									
U220	11111 Hz 10VPP	0	0	194 Hz 10VPP	341 Hz 10VPP	694 Hz 10VPP	GND 0	0	1389 Hz 10VPP	0	2778 Hz 10VPP	5555 Hz 10VPP	0	VCC 10																											
U221	0	1389 Hz 10VPP	1389 Hz 10VPP	2778 Hz 10VPP	2778 Hz 10VPP	0	GND 0	0	0	10	0	10	1389 Hz 10VPP	VCC 10																											
U222	1389 Hz	2778 Hz	2778 Hz	2778 Hz	2778 Hz	1389 Hz	GND 0	1389 Hz	2778 Hz	1389 Hz	1389 Hz	2778 Hz	1389 Hz	VCC 10																											
U223	5	5	5	5	2778 Hz	2778 Hz	GND 0	5	5	5	5	1389 Hz	1389 Hz	VCC 10																											
U224	0	0	0	0	0	10	0	GND 0	0	12	0	28	12	28	28	0																									

FIGURE 5.3 STATIC Voltage check - CPU Board 1A1A2

Schematic p/N: 8068020071

Parts list p/N: 8068009094
8068020098

PCB's p/N: 8068009205
8068020209

Figure 5.4 Programming Board 1A1A1 and CPU Board 1A1A2 Schematic

HAIR ELECTRONICS, INC.
REPORT NO. DSP150

ON-LINE P[illegible]A. REQUEST
RETURN TO DEVICE - DSP12

DATE PRINTED 2/05/96

PART NO	DESCRIPTION	VENDOR PN	REFERENCE DESIGNATION	IY CD	COM CDE	ECN NUMBER	FG RV	D C	P C	QUANTITY PER	UM
8068009094	PC ASSY, PROGRAMMING			MFG		8068-007	A				EA
COMPONENT											
0170770001	RESISTOR 4.7K, 5%, 1/4W	NSN 5905001140711 RCR07G472JS AMMO PK	R9,11	PUR	101					2.	EA
0171060009	RESISTOR 47K, 10%, 1/4W	NSN 5905001410717 RCR07G473JS AMMO PK	P5	PUR	101	038-8068				1.	EA
0171180003	RESISTOR 100, 5%, 1/4W	NSN 5905001411183 RCR07G101JS RC07GF101K AMMO PK	R8	PUR	101					1.	EA
0171560001	RESISTOR 1K, 10%, 1/4W	NSN 5905001107620 RCR07G102JS RC07GF102K AMMO PK	R7	PUR	101	011-8068				1.	EA
0171680006	RESISTOR 82K, 10%, 1/4W	NSN 5905004356374 AMMO PACK	R4	PUR	101	038-8068				1.	EA
0172230004	RESISTOR 22K, 5%, 1/4W	NSN 5905001168556 RCR07G223JS AMMO PK	R1	PUR	101					1.	EA
0172350003	RESISTOR 15K, 5%, 1/4W	NSN 5905001168555 RC07GF153J AMMO PK	R10	PUR	101					1.	EA
0173520006	RESISTOR 68K, 10%, 1/4W	NSN 5905001193505 RCR07G683JS AMMO PK	R6	PUR	101	038-8068				1.	EA
0183180003	RESISTOR 12K, 10%, 1/4W	NSN 5905001061278 RCR07G123JS AMMO PK	R2,3	PUR	101					2.	EA
0281660006	CAP. 1UF, 35V	SPEC. 1000030024 NSN 5910010970735 T354A105M035AS KEM.	C1,2	PUR	165	004-8068				2.	EA
0281700001	CAP. 47UF, 20V	SPEC. 1000030024 NSN 5910010180141 T354K476M020AS KEM.	C[illegible]	PUR	165	038-8068				1.	EA
0405110004	DIODE, SIGNAL, GERM. 1N270	1N270 1N270 THOMSON-CSF NSN 5961005562091 JAN1N270 1N270 BKC	CR1-10	PUR	244					10.	EA
0448010003	TRANSISTOR, NPN, SI. 2N4124	2N4124 ITT SPR 2N4124 NATIONAL NSN 5961004223466 2N4124 MOTOROLA 2N4124 GE 2N4124 PHILLIPS	Q1,2	PUR	271					2.	EA
1001280024	HUMISEAL 1B31 DNP			PUR	820					.001	GA
1001280032	HUMISEAL THINNER NO 503			PUR	820					.001	GA
1004290039	CAP. 0.1UF, 50V, 20%	923CX7R104M050B SPR	C4-8	PUR	175	023-8068				5.	EA
1004300026	CRYSTAL, OSC HYBRID, CMOS	CXO-55-2 CIS 970C MONITOR	U6	PUR	050	011-8068				1.	EA
1004340036	SWITCH, DIP, 5 POSITION	76SB05S GRAYHILL	S1-5	PUR	220					5.	EA
1004630026	RELAY, REED, 12VDC 1 FORM C	310-6-1 WABASH 191TE-1C1M12G SIGMA	K2	PUR	229					1.	EA
1004660022	IC, DIGITAL 4001B	MC14001BCP MOTOROLA CD4001BCN NATIONAL HEF4001BP SIGNETICS	U4	PUR	284					1.	EA

PART NO	DESCRIPTION	VENDOR PN	REFERENCE DESIGNATION	TY CD	COM CODE	ECN NUMBER	EG RV	D C	P C	QUANTITY PER	UM
8068009094	PC ASSY, PROGRAMMING			MFG		8068-007	A				EA
COMPONENT											
		HCF4001BE SGS									
		4001B REFERENCE									
		TC4001BP TOSHIBA									
		SCL4001BE SOLID ST.									
1005190011	IC, DIGITAL 4584B	MC14584BCP MOTOROLA	U5	PUR	284					1.	EA
		SCL4584BE SOLID ST.									
		4584B REFERENCE									
1005330000	RELAY, SPST, 12V, REED	8401-12-000 COTO	K1	PUR	229					1.	EA
		NSN 5945012356350									
		310-5-1 WABASH									
1006010033	CONNECTOR, STRIP, 10 PIN	65645-110 BERG	P6,7,8	PUR	856	043-8068				3.	EA
		22-10-2101 MOLEX									
1006090011	IC, DIGITAL 4040B	MC14040BCP MOTOROLA	U2,3	PUR	284					2.	EA
		CD4040BE RCA									
		HEF4040BP SIGNETICS									
		SCL4040BE SSC									
		HCF4040BE SGS									
		4040B REFERENCE									
		TC4040BP TOSHIBA									
1006100016	IC, DIGITAL, CMOS MC14569B	MC14569BCP MOTOROLA	U6	PUR	284					1.	EA
1006660046	CAP, 0.001UF, 50V, 20%	923CX7R102M050R SPR	C9	PUR	175	004-8068				1.	EA
8068009209	PCP, PROGRAMMING			PUR	020					1.	EA

END OF REPORT

PART NO	DESCRIPTION	VENDOR PN	REFERENCE DESIGNATION	TY CD	COM CDE	ECN NUMBER	EG RV	D C	P C	QUANTITY PER	UM
8068020098	PC ASSY. CPU			MFG		8068-007	A				EA
COMPONENT											
017041000C	RESISTOR 10K, 10%, 1/4W	NSN 5905001063666 RC07GF103K AMMO PK	R3,18,27	PUR	101	040-8068				3.	EA
0170770001	RESISTOR 4.7K, 5%, 1/4W	NSN 5905001140711 RCR07G472JS AMMO PK	R11,29	PUR	101					2.	EA
0170890007	RESISTOR 3.3K, 10%, 1/4W	NSN 5905001266683 RCR07G332J AMMO PK	R28	PUR	101					1.	EA
0171060008	RESISTOR 47K, 10%, 1/4W	NSN 5905001410717 RCR07G473JS AMMO PK	R19,20	PUR	101					2.	EA
0171180003	RESISTOR 100, 5%, 1/4W	NSN 5905001411183 RCR07G101JS RC07GF101K AMMO PK	R12	PUR	101					1.	EA
0171320006	RESISTOR 220, 10%, 1/4W	NSN 5905001353973 RCR07G221JS AMMO PK	R24	PUR	101	012-8068				1.	EA
0171560001	RESISTOR 1K, 10%, 1/4W	NSN 5905001107620 RCR07G102JS RC07GF102K AMMO PK	R1,2,4,5	PUR	101	040-8068				4.	EA
0172230004	RESISTOR 22K, 5%, 1/4W	NSN 5905001168556 RCR07G223JS AMMO PK	R26	PUR	101					1.	EA
0174290004	RESISTOR 56, 10%, 1/4W	NSN 5905001330440 RCR07G560JS AMMO PK	R30	PUR	101	015-8068				1.	EA
0174810008	RESISTOR 6.8K, 5%, 1/4W	NSN 5905001107622 RCR07G682JS AMMO PK	R6	PUR	101					1.	EA
0176870008	RESISTOR 2.2M, 10%, 1/4W	NSN 5905002521671 RCR07G225JS AMMO PK	R16,17	PUR	101					2.	EA
0178070009	RESISTOR 2.2K, 5%, 1/4W	NSN 5905001057764 RC07GF222J	R7-10,14,25	PUR	101	040-8068				6.	EA
0182530061	RESISTOR 33, 10%, 1/4W	RCR07G330JS AMMO PK	R31	PUR	101					1.	EA
0183180003	RESISTOR 12K, 10%, 1/4W	NSN 5905001061278 RCR07G123JS AMMO PK	R13,32-37	PUR	101	040-8068				7.	EA
0196730007	RESISTOR 2670, 1%, 1/8W	RN55C2671F NSN 5905004683019 RNC55H2671FS	R23	PUR	109	010-8068				1.	EA
0280920008	CAP. 15UF, 20V	SPEC. 1000030024 NSN 5910010059924 T362B156M020AS KEM.	C27,28,29	PUR	165	006-8068				3.	EA
0281660000	CAP. 1UF, 35V	NSN 5910010940349 SPEC. 1000030024 NSN 5910010970735 T354A105M035AS KEM.	C16,46	PUR	165	040-8068				2.	EA
0293550000	CAP. 36PF, 500V, DM10, 5%	SPEC. 1000030008	C37	PUR	158					1.	EA
0296420006	CAP. 2.2UF, 15V	SPEC. 1000030024 NSN 5910010567598 T355A225M016AS KEM. NSN 5910004683208	C21,24,25,26	PUR	165					4.	EA
0405180004	DIODE, RECTIFIER 1N4004	1N4004 NSN 5961007233602 1N4004 MOTOROLA 1N4004 I.R.	CR5-8	PUR	245			Z		4.	EA

PART NO	DESCRIPTION	VENDOR PN	REFERENCE DESIGNATION	TY CD	COM CDE	ECN NUMBER	EG RV	D C	P C	QUANTITY PER	UM
8068020098	PC ASSY, CPU			MFG		8068-007	A				EA
COMPONENT											
0405210001	DIODE, ZENER 1N5245B	1N5245B TELEFUNKEN	CR9	PUR	241	042-8068				1.	EA
		NSN 5961004021372									
		1N5245B AMPEREX									
		1N5245B PHILIPS									
0405510004	DIODE, SIGNAL, GERM. 1N270	1N270	CR1-4	PUR	244					4.	EA
		1N270 THOMSON-CSF									
		NSN 5961005562091									
		JAN1N270									
		1N270 BKC									
0448600005	IC, LINEAR LM340T5	LM340T-5 NATIONAL	U16	PUR	285					1.	EA
		MC7805CT MOTOROLA									
		UA7805UC FAIRCHILD									
		7805C REFERENCE									
		UA7805C TI									
		L7805CV SGS									
1001030036	RESISTOR 100K, 1%, 1/8W	RN55C1003F, MEPCO	R21	PUR	109					1.	EA
		NSN 5905001374821									
[redacted]				[redacted]						[redacted]	
1003120008	RESISTOR 8.66K, 1%, 1/8W	RN55C8661F	R22	PUR	109	010808688				1.	EA
1003570001	IC, LINEAR LM324N	LM324N NATIONAL	U17	PUR	285					1.	EA
		CA324E/LM324N RCA									
		LM324N MOTOROLA									
		LM324N TI									
		LM324N RAYTHEON									
		LM324N SGS									
		NSN 5962010987418									
1004080000	RESISTOR 86.6K, 1%, 1/8W	RN55C8662F	R15	PUR	109					1.	EA
1004250037	IC, LINEAR 7810CKC	UA7810CKC GI	U15	PUR	285					1.	EA
		AN7810 PANASONIC									
		7810 REFERENCE									
1004280017	SOCKET, 16 PIN	ICA-163-STG RN	J3	PUR	860					1.	EA
1004280025	CAP. 1000UF, 35V	AR108M35E JARO	C15,18	PUR	166					2.	EA
1004290021	CAP. 220UF, 16V	LR227M16E JARO	C19,20,45	PUR	166					3.	EA
1004290035	CAP. 0.1UF, 50V, 20%	923CX7R104M050B SPR	C1-14,17,23,30-35	PUR	175					22.	EA
1004300034	CAP. 0.01UF, 50V, 20%	923CX7R103M050B SPR	C22,36,42-44,47-51	PUR	175	040-8068				10.	EA
1004320035	BUZZER	YMB-12 STAR MICRO.	BZ-1	PUR	801					1.	EA
1004330031	RELAY, SPDT, 24VDC	60RE1-24DC SIGMA	K1	PUR	229					1.	EA
1004460015	IC, DIGITAL 75453B	SN75453BP TI	U1,14	PUR	284					2.	EA
		DS75453N NATIONAL									
		75453B REFERENCE									
1004460023	IC, DIGITAL 4066BC	MC14066BCP MOTOROLA	U3,23	PUR	284					2.	EA
		CD4066BE RCA									
		CD4066BCN NATIONAL									
		SCL4066BE SOLID ST.									
		HCF4066BE SGS									
		4066B REFERENCE									
		SCL4066BE SPRAGUE									

PART NO	DESCRIPTION	VENDOR PN	REFERENCE DESIGNATION	TY CD	COM CDE	ECN NUMBER	EG RV	D C	P C	QUANTITY PER	UM
8068020098	PC ASSY, CPU			MFG		8068-007	A				EA
COMPONENT											
		TC4066BP TOSHIBA									
1004460031	IC, DIGITAL 4520B	MC14520BCP MOTOROLA	U4	PUR	284					1.	EA
		CD4520BE RCA									
		CD4520BCN NATIONAL									
		HEF4520BP SIGNETICS									
		SCL4520BE SOLID ST.									
		4520B REFERENCE									
1004520034	IC, DIGITAL 4068B	MC14068BCP MOTOROLA	U9	PUR	284					1.	EA
		CD4068BE RCA									
		4068B REFERENCE									
1004660022	IC, DIGITAL 4001B	MC14001BCP MOTOROLA	U21,22	PUR	284					2.	EA
		CD4001BCN NATIONAL									
		HEF4001BP SIGNETICS									
		HCF4001BE SGS									
		4001B REFERENCE									
		TC4001BP TOSHIBA									
		SCL4001BE SOLID ST.									
1005090033	IC, DIGITAL SCANCALL	4804-00020-001 SGC	U18	PUR	284					1.	EA
		NEC D546C-8781SPCL									
1005180032	IC, DIGITAL MC14503BCP	MC14503BCP MOTOROLA	U23	PUR	284					2.	EA
		CD4503BE RCA									
		CD4503BCN NATIONAL									
		4053B REFERENCE									
1005200009	RES NTWK 8 PIN SIP 10K COM	4608X-101-103BOURNS	[redacted]	PUR	105					1.	EA
1005380015	IC, DIGITAL 4027B	CD4027BE RCA	[redacted]	PUR	284					1.	EA
		MC14027BCP MOTOROLA									
		CD4027BCN NATIONAL									
		SCL4027BE SOLID ST.									
		4027B REFERENCE									
1005490031	IC, DIGITAL CD4024BE	CD4024BE RCA	[redacted]	PUR	284					1.	EA
		MC14024BCP MOTOROLA									
		SCL4024BE SGC									
		4024B REFERENCE									
1005800022	IC, DIGITAL ULN2004A	ULN2004AN TI	U10,24	PUR	284					2.	EA
		ULN2004A SPRAGUE									
		ULN2004A MOTOROLA									
1006010017	CAP. 0.47UF, 35V	SPEC. 1000039024	C38-41	PUR	165					4.	EA
		T368A474K035AS KEM.									
1006090037	IC, DIGITAL MC14504	MC14504BCP MOTOROLA	U12	PUR	284					1.	EA
		4504B REFERENCE									
		CD4504B GE/RCA									
1006100008	IC, DIGITAL CD22100E	CD22100E RCA	U13	PUR	284					1.	EA
1006100016	IC, DIGITAL, CMOS MC14569B	MC14569BCP MOTOROLA	U19	PUR	284					1.	EA
1006130004	RES NTWK 6 PIN SIP 10K COM	4606X-101-103BOURNS	RP2,4,5,6	PUR	105					4.	EA
		706A103 A-B									
1006560033	CONNECTOR, PC, 3 PIN HEADER	HLSS156-3-C PANDUIT	J2	PUR	856					1.	EA
1006570012	RES NTWK 10 PIN SIP 22K COM	4610X-101-223BOURNS	RP1	PUR	105					1.	EA
1006580000	RES NTWK 6 PIN SIP 22K COM	4606X-101-223BOURNS	RP3	PUR	105					1.	EA

PART NO	DESCRIPTION	VENDOR PN	REFERENCE DESIGNATION	TY CD	COM CODE	ECN NUMBER	EG RV	D C	P C	QUANTITY PER	UM
8068020098	PC ASSY, CPU			MFG		8068-007	A				EA
COMPONENT											
1006610049	CONNECTOR, PC, 10 PIN MALE	HLSS156-10-L PANDUT	J1,5	PUR	858					2.	EA
1006650016	RES NTWK 6 PIN SIP 470	ISO 4606X-102-471BOURNS	RP8	PUR	105					1.	EA
		4306R-102-471BOURNS									
1006750011	CONNECTOR/CABLE ASSY	AX21810-10-06WE MLX	J6,7,8	PUR	753	044-8068				3.	EA
8069020195	PCB, CPU, SWAGED GSC-902			MFG						1.	EA
8068021094	EPROM W/2732 #1 SOFTWARE 902	TP 1006700021	U6	MFG						1.	EA
8068022091	EPROM W/2732 #2 SOFTWARE 902	TP 1006700021	U5	MFG						1.	EA
8068023097	EPROM W/2732 #3 SOFTWARE 902	TP 1006700021	U11	MFG						1.	EA

END OF REPORT

Schematic p/N: 8068010076

Parts List p/N: 8068010092

PCB's p/N: 8068010203

FIGURE 5.5 CONTROL BOARD 1A1A3 Schematic

PART NO	DESCRIPTION	VENDOR PN	REFERENCE DESIGNATION	TY CD	COM CDE	ECN NUMBER	EG RV	D C	P C	QUANTITY PER	UM
8068010092	PC ASSY, CONTROL			MFG		8068-007	A				EA
COMPONENT											
0405510004	DIODE, SIGNAL, GERM.	1N270 1N270 1N270 THOMSON-CSF NSN 5961005562091 JAN1N270 1N270 BKC	CR1,2,3	PUR	244					3.	EA
[redacted]		[redacted]		[redacted]						[redacted]	
1004380011	SWITCH, ROTARY, DP6T	A206-05-SCQ C&K	S1,2,3,4	PUR	212					4.	EA
1004400012	INTERCONNECT PLUG, 16 PIN	WJC-163D-6-S RN		PUR	851					1.	EA
8068010203	PCB, CONTROL			PUR	020					1.	EA

END OF REPORT

schematic p/N: 8068030077

Parts List p/N: 80680400~~XX~~ 56/99
80680012~~XX~~ 55/98
8068030093
80680420~~XX~~ 59/91

FIGURE 5.6 Front and Rear Harness Assembly Schematic

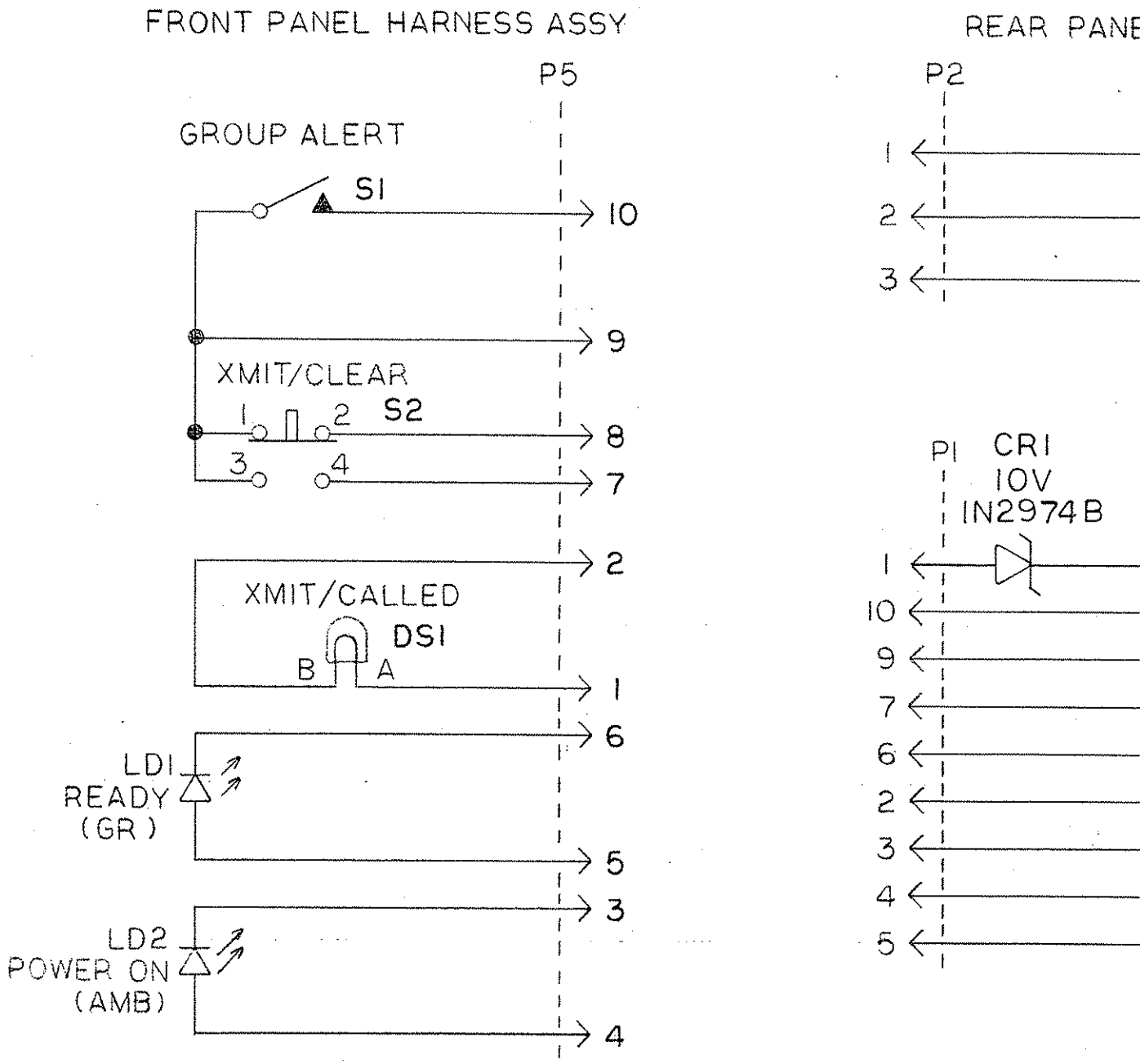

NEXT ASSY	USED ON	NEXT ASSY	FINAL ASSY
APPLICATION		QTY REQD	

UNLESS OTHERWISE SPECIFIED
BREAK SHARP EDGES & REMOVE ALL BURRS
ALL DIMS AFTER SURFACE FINISH
DO NOT SCALE DWG.

DRA BY
CHE BY
PRO ENG
APP BY

[illegible] ELECTRONICS, INC.
REPORT ID. [illegible]

ON-LINE P.O.M. REQUEST
RETURN TO DEVICE - DSP12

PART NO	DESCRIPTION	VENDOR PN	REFERENCE DESIGNATION	TY CD	COM CODE	ECN NUMBER	EG RV	D C	P C	QUANTITY PER	UM
8068040056	FINAL ASSY, GRY GSC-902			MFG		8068-007	A				EA
COMPONENT											
0162430001	RESISTOR 1.5, 5%, 3W	3X1.5 W.L.	R1	PUR	107	041-8068				1.	EA
0746450004	BOOT, TOGGLE SWITCH 15/32-32	SW1AN1030 C-H N1030 APM NSN 5930006896786 M54231/101-01		PUR	524					1.	EA
0405340001	DIODE, ZENER 1N2974B	1N2974B JAN1N2974B NSN 5310009338118	CR1	PUR	242	041-8068				1.	EA
0500020001	WASHER, SPLIT #4	MS35338-135 NSN 5310002240746		PUR	501	041-8068	Z			10.	EA
0500020027	WASHER, SPLIT #4 PLK	MS35388-135B NSN 5310009296395		PUR	501		T			8.	EA
0500040001	WASHER, SPLIT #6	MS35338-136 NSN 5310009338120		PUR	501		Z			2.	EA
0500070008	WASHER, SPLIT #10	MS35338-138 96302 FEDERAL NSN 5310002320744		PUR	501	045-8068	Z			1.	EA
0500100008	WASHER, FLAT #4 .281 OD	NSN 5310009938720		PUR	502	013-8068	Z			9.	EA
0500780005	WASHER, FLAT #10 .437 OD	SPEC. 1003010008 NSN 5305000545648		PUR	502	045-8068	Z			1.	EA
0500850054	SCREW, PH 4-40 X 5/16 LG.	MS51957-14 SPEC. 1003010008 NSN 5305000545654		PUR	584		Z			5.	EA
0500850142	SCREW, PH 4-40 X 7/8 LG.	MS51957-20 SPEC. 1003010008 NSN 5305004594687		PUR	584					4.	EA
0500850526	SCREW, PH 4-40 X 5/16 LG. BLK.	MS51957-148 SPEC. 1003010008 70202 FEDERAL		PUR	584	013-8068				4.	EA
0500850721	SCREW, PH 4-40 X 7/16 LG. BLK.	NSN 5310002083786 70206 FEDERAL		PUR	584	013-8068	T			8.	EA
0501880003	NUT, HEX 4-40 X 3/16 AF	NSN 5310001393008 70213 FEDERAL		PUR	520	041-8068	Z			9.	EA
0501910000	NUT, HEX 6-32 X 1/4 AF	NSN 5310009349765 MS35650-304		PUR	520		Z			2.	EA
0501540006	NUT, HEX 10-32 X 3/8 AF	NSN 5310001393009 1910 FEDERAL		PUR	520	045-8068				1.	EA
0502460008	LUG, SOLDER, PLAIN NO. 10	NSN 5940006818184 N-9030-1/4 APM		PUR	451	045-8068				1.	EA
0531000001	NUT, HEX SEAL, 3/8-32 X 1/2 AF	NSN 5930008230482 M5423/09-02		PUR	524					4.	EA
0533180007	PIN, DRIVE NO. 0 X 1/8 LG.	7410 FEDERAL		PUR	739		T			2.	EA
0536550000	TERMINAL, INSUL. 4-40 MALE	572-4822-1-0516 CTC		PUR	512	041-8068				1.	EA
1004310021	LED LAMP ASSY, AMBER, 5V	4140-1-002 LEDCO	DS1	PUR	805					1.	EA
1004470011	SWITCH, PUSHBUTTON, SPDT, LTD.	51-131-.025 EAO	S2	PUR	221					1.	EA
1004470020	LENS, TRANSLUCENT, RED	51-931.2 EAO		PUR	805					1.	EA
1004470037	LAMP, INCANDESCENT, .04A, 28V	31-963.2 EAO CM388 G.I.		PUR	805					1.	EA

COLLINS ELECTRONICS, INC.
MIDDLETOWN, TENNESSEE

ON-LINE B.O.M. REQUEST
RETURN TO DEVICE - DSP12

DATE PRINTED 2/05/96

PART NO	DESCRIPTION	VENDOR PN	REFERENCE DESIGNATION	TY CD	COM CDE	ECN NUMBER	EG RV	D C	P C	QUANTITY PER	UM
8068040056	FINAL ASSY, GRY	GSC-902		MFG		8068-007	A				EA
COMPONENT											
		ML388 MICROLAMPS		PUR	453	013-8068				1.	EA
1006540024	TERMINAL BLOCK, 3 POS.	1696-3 KULKA	TB1								
		JC6-T304-03 REED		PUR	805					1.	EA
1006640029	LED LAMP ASSY, GREEN, 5V	4130-4-002 LEDCO	DS2	PUR	212					1.	EA
1006760008	SWITCH, TOGGLE, SPDT,MOMENTARY	7108-TZQ C&K	S1	PUR	260	045-8068				2.	EA
1006840036	MICA WASHER, TO-60	B52600F001 MOTOROLA		PUR	260	045-8068				1.	EA
1006860037	BUSHING, TEFLON, #10 STUD	B51547F012 MOTOROLA		PUR	230					4.	EA
5C2464160A	KNOB, .70 D, BLK, WHT DOT,SKRT			MFG						1.	EA
8068009024	PC ASSY, PROGRAMMING			MFG						1.	EA
8068010092	PC ASSY, CONTROL			MFG						1.	EA
8068020098	PC ASSY, CPU			MFG						1.	EA
8068030093	HARNESS ASSY	GSC-902		PUR	010	041-8068				1.	EA
8068030301	BRACKET, ZENER			O/P	011					1.	EA
8068040218	PANEL, FRONT, GRY	GSC-902		O/P	011					2.	EA
8068040315	BAR, SIDE, GRY	GSC-902		PUR	519					1.	EA
8068040404	GASKET KIT	GSC-902		O/P	011					1.	EA
8068040501	CHASSIS, BLACK	GSC-902		PUR	010					1.	EA
8068041001	BLOCK, HEATSINK			PUR	018					1.	EA
8068041206	LABEL, ALARM	GSC-902		PUR	018					1.	EA
8068041303	NAMEPLATE, SELCALL	GSC-902									

END OF REPORT

PART NO	DESCRIPTION	VENDOR PN	REFERENCE DESIGNATION	TY CD	COM CDE	ECN NUMBER	EG RV	D C	P C	QUANTITY PER	UM
8068040099	FINAL ASSY, GRE GSC-902			MFG		8068-007	A				EA
COMPONENT											
0162430001	RESISTOR 1.5, 5%, 3W	3X1.5 W.L.	R1	PUR	107	041-8068				1.	EA
0346450004	BOOT, TOGGLE SWITCH 15/32-32	SW1AN1030 C-H		PUR	524					1.	EA
		N1030 APM									
		NSN 5930006896786									
		MS4231/101-01									
0405340001	DIODE, ZENER 1N2974B	1N2974B	CR1	PUR	242	041-8068				1.	EA
		JAN1N2974B									
0500020001	WASHER, SPLIT #4	NSN 5310009338118		PUR	501	041-8068		Z		18.	EA
		MS35338-135									
0500020027	WASHER, SPLIT #4 BLK	NSN 5310002240746		PUR	501	8068-007		T		8.	EA
		MS35388-135B									
0500040001	WASHER, SPLIT #6	NSN 5310009296395		PUR	501			Z		2.	EA
		MS35338-136									
0500070008	WASHER, SPLIT #10	NSN 5310009338120		PUR	501	045-8068		Z		1.	EA
		MS35338-138									
0500180008	WASHER, FLAT #4 .281 OD	96302 FEDERAL		PUR	502	013-8068		Z		9.	EA
		NSN 5310002320744									
0500780005	WASHER, FLAT #10 .437 OD	NSN 5310009938728		PUR	502	045-8068				1.	EA
0500850054	SCREW, PH 4-40 X 5/16 LG.	SPEC. 1003010008		PUR	584			Z		5.	EA
		NSN 5305000545698									
		MS51957-14									
0500850143	SCREW, PH 4-40 X 7/8 LG.	SPEC. 1003010008		PUR	584					4.	EA
		NSN 5305000545654									
		MS51957-20									
0500850526	SCREW, PH 4-40 X 5/16 LG. BLK.	SPEC. 1003010008		PUR	584	013-8068				4.	EA
		NSN 5305004594687									
		MS51957-14B									
0500850721	SCREW, PH 4-40 X 7/16 LG. BLK.	SPEC. 1003010008		PUR	584	013-8068		T		8.	EA
0501800003	NUT, HEX 4-40 X 3/16 AF	70202 FEDERAL		PUR	520	041-8068		Z		9.	EA
		NSN 5310002083786									
0501910000	NUT, HEX 6-32 X 1/4 AF	70206 FEDERAL		PUR	520			Z		2.	EA
		NSN 5310001393008									
0501940006	NUT, HEX 10-32 X 3/8 AF	70213 FEDERAL		PUR	520	045-8068				1.	EA
		NSN 5310009349765									
		MS35650-304									
		NSN 5310001393009									
0502460008	LUG, SOLDER, PLAIN NO. 10	1910 FEDERAL		PUR	451	045-8068				1.	EA
		NSN 5940006818184									
0531900001	NUT, HEX SEAL, 3/8-32 X 1/2 AF	N-9030-1/4 APM		PUR	524					4.	EA
		NSN 5930008230482									
		MS423/09-02									
0533180007	PIN, DRIVE NO. 0 X 1/8 LG.	7410 FEDERAL		PUR	739			T		2.	EA
0536550008	TERMINAL, INSUL. 4-40 MALE	572-4822-1-0516 ETC		PUR	512	041-8068				1.	EA
1004310021	LED LAMP ASSY, AMBER, 5V	4140-1-002 LEDCO	DS1	PUR	805					1.	EA
1004470011	SWITCH, PUSHBUTTON, SPDT, LTD.	51-131-.025 EAO	S2	PUR	221					1.	EA
1004470025	LENS, TRANSLUCENT, RED	51-931.2 EAO		PUR	805					1.	EA
1004470037	LAMP, INCANDESCENT, .04A, 28V	31-963.2 EAO		PUR	805					1.	EA
		CM388 G.I.									

PART NO	DESCRIPTION	VENDOR PN	REFERENCE DESIGNATION	TY CD	COM CDE	ECN NUMBER	EG RV	D C	P C	QUANTITY PER	UM
8068040099	FINAL ASSY, GPL GSC-902			MFG		8068-007	A				EA
COMPONENT											
1006540024	TERMINAL BLOCK, 3 POS.	ML388 MICROLAMPS 1696-3 KULKA	TB1	PUR	453	013-8068				1.	EA
1006640025	LED LAMP ASSY, GREEN, 5V	JC6-T304-03 REED 4130-4-002 LEDCO	DS2	PUR	805					1.	EA
1006760008	SWITCH, TOGGLE, SPDT,MOMENTARY	7108-TZQ C&K	S1	PUR	212					1.	EA
1006840036	MICA WASHER, TO-60	B52600F001 MOTOROLA		PUR	260	045-8068				2.	EA
1006860037	BUSHING, TEFLON, #10 STUD	B51547F012 MOTOROLA		PUR	260	045-8068				1.	EA
5024641604	KNOB, .70 D, BLK, WHT DOT,SKRT			PUR	230					4.	EA
8068080094	PC ASSY, PROGRAMMING			MFG						1.	EA
8068010092	PC ASSY, CONTROL			MFG						1.	EA
8068020098	PC ASSY, CPU			MFG						1.	EA
8068030093	HARNESS ASSY GSC-902			MFG						1.	EA
8068070301	BRACKET, ZENER			PUR	810	041-8068				1.	EA
8068040200	PANEL, FRONT, GRN			O/P	011					1.	EA
8068040307	EAR, SIDE, GRN GSC-902			O/P	011					2.	EA
8068040404	GASKET KIT GSC-902			PUR	519					1.	EA
8068040501	CHASSIS, BLACK GSC-902			O/P	011					1.	EA
8068041001	BLOCK, HEATSINK			PUR	010					1.	EA
8068041206	LABEL, ALARM GSC-902			PUR	018					1.	EA
8068041303	NAMEPLATE, SELCALL GSC-902			PUR	018					1.	EA

END OF REPORT

[illegible] ELECTRONICS, INC.
[illegible] NO. [illegible]

ON-LINE I.O.M. REQUEST
RETURN TO DEVICE - DSP12

DATE PRINTED 2/05/96

PART NO	DESCRIPTION	VENDOR PN	REFERENCE DESIGNATION	TY CD	COM CODE	ECN NUMBER	EG RV	D C	P C	QUANTITY PER	UM
8068001255	FINAL ASSY, TESTED,GRY GSC-902			MFG		8068-007	A				EA
COMPONENT											
0500020027	WASHER, SPLIT #4 BLK	NSN 5310002240746		PUR	501			T		11.	EA
0500050026	SCREW, FH 4-40 X 5/16 LG. BLK.	MS35388-135B SPEC. 100301000B NSN 5305004594687		PUR	584					11.	EA
0508270006	CAPLUG NO. EC-10	MS51957-14B EC-10 CAPLUG NSN 5340006164796		PUR	853			T		1.	EA
1001020006	KNOB, 1.13D, 1/4-20 THD STUD			O/P	230			T		2.	EA
1006650028	WASHER, FLAT, .312 ID, .750 OD	5613-79-6 SEASTROM		PUR	502	005-8068				2.	EA
8068040056	FINAL ASSY, GRY	GSC-902		MFG						1.	EA
8068040617	COVER, GRY	GSC-902		O/P	011					1.	EA
8068040803	BRACKET, MOUNTING			PUR	011					1.	EA

END OF REPORT

[illegible] ELECTRONICS, INC.
[illegible] PA. [illegible]

ON-LINE B.O.M. REQUEST
RETURN TO DEVICE - DSP12

DATE PRINTED 2/05/86

PART NO	DESCRIPTION	VENDOR PN	REFERENCE DESIGNATION	TY CO	COM CDE	ECN NUMBER	EG RV	D C	P C	QUANTITY PER	UM
8068001298	FINAL ASSY, TESTED,GRN GSC-902			MFG		8068-007	A				EA
COMPONENT											
0500020027	WASHER, SPLIT #4 BLK	NSN 5310002240746		PUR	501			T		11.	EA
0500050024	SCREW, FH 4-40 X 5/16 LG, BLK.	MS35388-135B SPEC. 1003010008 NSN 5305004594687		PUR	584					11.	EA
0508270006	CAPLUG NO. EC-10	MS51957-14B EC-10 CAPLUG NSN 5340006164796		PUR	853			T		1.	EA
1001020006	KNOB, 1.130, 1/4-20 THD STUD			O/P	230			T		2.	EA
1006610028	WASHER, FLAT, .312 ID, .750 OD	5613-79-6 SEASTROM		PUR	502	005-8068				2.	EA
8068040095	FINAL ASSY, GRN	GSC-902		MFG						1.	EA
8068040605	COVER, GRN	GSC-902		O/P	011					1.	EA
8068040803	BRACKET, MOUNTING			PUR	011					1.	EA

END OF REPORT

ON-LINE P.O.M. REQUEST
RETURN TO DEVICE - DSP12

[illegible] ELECTRONICS, INC.
REPORT NO. DEP150

PART NO	DESCRIPTION	VENDOR PN	REFERENCE DESIGNATION	TY CD	COM CODE	ECN NUMBER	EG RV	D C	P C	QUANTITY PER	UM
8068030093	HARNESS ASSY GSC-902			MFG		8068-007	A				EA
COMPONENT				PUR	156	037-8068				1.	EA
0201730008	CAP. 0.01UF, 50V, X7R, 20%	C320C103M5R5CA KEM. C1 NSN 5910000249699		PUR	858					1.	EA
0751490008	CONNECTOR, POWER, 10 PIN ROUND	MS3102A-18-19S NSN 5935009196485	J4	PUR	850					1.	EA
1006540032	COVER, END CONNECTOR	EC156F3-C PANDUIT		PUR	850	009-8068				2.	EA
1006550011	COVER, END CONNECTOR	EC156F-10-L PANDUIT		PUR	856	009-8068				2.	EA
1006560009	CONNECTOR, END, PC, 10 POS.	CE156F26-10-L PANDT P1,5		PUR	856					1.	EA
1006560017	CONNECTOR, END, PC, 3 POS.	CE156F18-3-C PANDUT P2		MFG						1.	EA
8068070107	WIRE KIT, HARNESS ASSY GSC-902										

END OF REPORT

[illegible] ELECTRONICS, INC.
REPORT NO. [illegible]

ON-LINE E.C.P. REQUEST
RETURN TO DEVICE - DSP12

DATE PRINTED 2/05/96

PART NO	DESCRIPTION	VENDOR PN	REFERENCE DESIGNATION	TY CD	COM CDE	ECN NUMBER	EG RV	D C	P C	QUANTITY PER	UM
8068042059	RACKMOUNT KIT, GREY	GSC-902		MFG		8068-007	A				EA
COMPONENT .											
8068040714	PANEL, RACKMOUNT, GRY			O/P	011					1.	EA
8068041102	BRACKET, RACKMOUNT PANEL MTG.			PUR	010					2.	EA

END OF REPORT

PART NO	DESCRIPTION	VENDOR PN	REFERENCE DESIGNATION	TY CD	COM CDE	ECN NUMBER	EG RV	D C	P C	QUANTITY PER	UM
8068042091	RACKMOUNT KIT, GREEN GSC-902			MFG		8068-007	A				EA
COMPONENT											
				O/P	011					1.	EA
				PUR	010					2.	EA
P068040706	PANEL, RACKMOUNT, GRN										
P068041109	BRACKET, RACKMOUNT PANEL MTG.										

END OF REPORT