TM-8101000500

ALE MODEM

MD-9188A

OPERATION and MAINTENANCE MANUAL

SUNAIR 3101 SW Third Avenue, Ft. Lauderdale, FL 33315-3389

WARRANTY POLICY

GROUND AND MARINE PRODUCTS

Sunair Electronics warrants equipment manufactured by it to be free from defects in material or workmanship, under normal use for the lesser of one (1) year from the date of installation or 15 months from date of shipment by Sunair.

Sunair will repair or replace, at its option, any defective equipment or component of the equipment returned to it at its factory, transportation prepaid, within such warranty period. No reimbursement will be made for non-factory repair charges.

This warranty is void if equipment is modified or repaired without authorization, subjected to misuse, abuse, accident, water damage or other neglect, or has its serial number defaced or removed.

THIS WARRANTY IS ESPECIALLY IN LIEU OF ANY AND ALL OTHER WARRANTIES EXPRESSED OR IMPLIED, INCLUDING ANY IMPLIED WARRANTY OF MERCHANTABILITY OR FITNESS FOR A PARTICULAR PURPOSE. The obligation and responsibility of Sunair shall be limited to that expressly provided herein and Sunair shall not be liable for consequential or other damage or expense whatsoever therefore or by reason thereof.

Sunair reserves the right to make changes in design or additions to or improvements in its equipment without obligation to install such additions or improvements in equipment theretofore manufactured.

sunair electronics, inc.

SUNAIR®

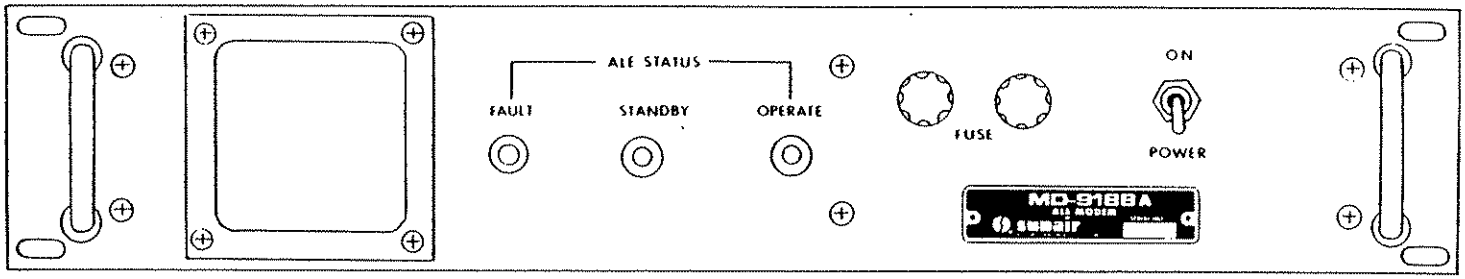

MD-9188A

ALE MODEM

OPERATION AND MAINTENANCE MANUAL

FIRST EDITION JANUARY 21, 1994

PRODUCT SERVICE:

In case of difficulty please contact the Sunair Product Service Department, between the hours of 8:00 AM and 5:00 PM Eastern Time or write to:

Product Service Dept.
Sunair Electronics, Inc.
3101 SW Third Avenue
Ft. Lauderdale, FL 33315-3389
U.S.A.

Telephone: (954) 525-1505

Fax: (954) 765-1322

e-mail: techsupport@sunairhf.com

TRAINING:

Sunair offers training programs of varying lengths covering operation, service, and maintenance of all Sunair manufactured equipment. For details please contact the Product Service Department.

TABLE of CONTENTS

TABLE of CONTENTS (Cont...)

LISTING of FIGURES

LISTING of FIGURES (Cont...)

LISTING of TABLES

SECTION I

GENERAL INFORMATION

1.1 SCOPE OF MANUAL

This manual contains information necessary to install, operate, and maintain the MD-9188A 'Pathfinder' ALE Modem. Installation information is located in Section II. Operating Instructions are included in Section III. Theory of Operation is in Section IV. Section V contains Maintenance and Troubleshooting guidelines. Information in this manual applies to all equipment configurations, unless otherwise stated in the text or illustrations.

1.2 PURPOSE OF EQUIPMENT

The MD-9188A is a radio modem designed to operate with the Sunair RT-9000 transceiver to provide HF radio automatic link establishment (ALE). Designed for use in fixed-station or mobile environments, the modem complies with the signaling and link establishment requirements of MIL-STD-188-141A (Interoperability and Performance Standards for Medium and High Frequency Radio Equipment) and FED-STD-1045 (Telecommunications: HF Radio Automatic Link Establishment).

1.3 GENERAL DESCRIPTION

The MD-9188A ALE Modem is a practical, flexible, easy-to-use solution for the basic requirements of automatic link establishment for HF radios.

MD-9188A features include: robust MIL-STD-188-141A waveform, operational simplicity, link quality analysis (LQA), use of digital signal processing (DSP) technology, Golay-encoded forward error correction (FEC), rapid station connectivity, and selective calling.

The MD-9188A performs real-time near optimum channel selection at the time of link establishment. Individual-call link establishment is the functional goal of the MD-9188A, making it a practical solution to the needs of HF interoperability requirements.

The MD-9188A is based on state-of-the-art microcomputer and digital signal processing (DSP) technologies. DSP techniques enable the generation and detection of signals in a manner that is significantly more efficient and reliable than traditional analog processing. Maximum system flexibility is maintained by using software to implement all modem operations. This makes the MD-9188A adaptable to existing and future signaling schemes with no changes required to the hardware.

Operational simplicity is achieved by placing all modem control functions on the front panel of the RT-9000 transceiver connected to the modem. The equipment operator can program and activate ALE operations through the use of a small number of option menus, entry fields, and "soft" keys. Once activated, all transceiver and modem operations necessary for link establishment are performed automatically.

1.4 TECHNICAL SPECIFICATIONS

1.4.1 GENERAL

INPUT POWER: AC - 115/230 VAC, +/-15%, 25W, single phase 50-60 Hz.
DC - 12 -28 VDC, 40W
AUTOMATIC AC/DC CHANGEOVER

AUDIO INTERFACE IMPEDANCE: 600 ohms.

REMOTE INTERFACE: RS232 at 9600 Baud.

TERMINAL INTERFACE: RS232 at 9600 Baud.

SIZE: (CM) 8.9H X 42.5W X 45.7L
(INCHES) 3 1/2H X 16 3/4W X 18L
(RACK MOUNTABLE).

WEIGHT: (KG): 6.7
(LBS) 14.75

1.4.2 SIGNALING

MODULATION: 8-ary FSK.

SYMBOL RATE: 125 Baud.

BIT RATE: 375 bits/sec.

CODING: Golay forward error correction (FEC) Mode;
3/4 and 2/3 majority vote.

REDUNDANT WORD LENGTH: 49 symbols (147 bits).

DATA THROUGHPUT: 61.22 bits/sec.

CALLING CYCLE: 9016 ms (3 Character ID Only).

RESPONSE/ACKNOWLEDGE CYCLE: 2,352 ms (3 Character ID Only).

SCAN RATE: 500 ms/channel.

1.4.3 SELECTIVE CALLING

ADDRESS FORMAT: 15 Characters Maximum, alphanumeric ALE basic 38-character set, excluding wildcard character.

HANDSHAKE: 3-way, station-to-station and net call, 1-way all call and sounding.

NETWORK MANAGEMENT: 1 network 99 station address, 30 slot positions available for net call.

1.4.4 LINK QUALITY ANALYSIS

MEASUREMENTS: S+N/N (SINAD) and Bit Error Rate (BER).

ACCEPTANCE THRESHOLD: 20dB (approximate) no inhibit function after one sounding cycle.

1.4.5 AMD PROTOCOL

CHARACTER SET: 64 character ASCII subset.

MESSAGE SIZE: 90 characters, maximum.

SUPPORTING PROTOCOL: Single station link, all call and net call (net control station acknowledge only).

1.4.6 ENVIRONMENTAL

TEMPERATURE RANGE: -10° to +55°C.

HUMIDITY: 95% at 50°C.

VIBRATION: MIL-STD-810D.

1.5 EQUIPMENT SUPPLIED

The following is a list of equipment, with appropriate Sunair part numbers, supplied with the MD-9188 ALE Modem.

SUPPLIED EQUIPMENT:	SUNAIR PART NUMBERS:
ALE Modem, MD-9188A	8101001255 GRY 8101001298 O.D.
Manual	8101000500
Power Cord Assembly, 115 VAC or Power Cord Assembly, 230 VAC	8101002090 8101002197
Interconnect Kit	8101002596
Rackmount Kit	8101004891

1.6 OPTIONS AVAILABLE

The following is a list of optional equipment or accessories available for use with the MD-9188A ALE MODEM.

OPTIONAL EQUIPMENT/ACCESSORIES:	SUNAIR PART NUMBERS:
Power Cord Assembly, DC	8101002294
Field Module Kit	8101905090

THIS PAGE INTENTIONALLY LEFT BLANK.

SECTION II

INSTALLATION

2.1 GENERAL

This section contains all necessary instructions for unpacking, inspection, and, if required, reshipment of the equipment or parts. Information regarding location and mounting considerations, power requirements, and equipment interconnection is also provided.

2.2 UNPACKING AND INSPECTION

As soon as you have received your unit(s), unpack and inspect all components and accessories. Check the packing list to be sure you have received all items ordered, and that all items necessary for operation have been ordered.

NOTE: Be sure to retain the carton and its associated packing materials should it be necessary to reship the equipment.

Do not accept a shipment when there are visible signs of damage to the cartons until a complete inspection is made. If there is a shortage of items or any evidence of damage, insist on a notation to that effect on the shipping papers before signing the receipt from the carrier. If concealed damage is discovered after the shipment has been accepted, notify the carrier immediately in writing and await his inspection before making any disposition of the shipment. A full report should also be forwarded to Sunair's Product Services Department. Please be sure to include the following information for prompt service:

a) ORDER NUMBER.
b) MODEL AND SERIAL NUMBER.
c) NAME OF TRANSPORTATION AGENCY.
d) APPLICABLE DATES.

Upon receipt of this information, Sunair will make arrangements for repair or replacement.

2.3 RETURN OF EQUIPMENT TO FACTORY

The shipping carton for the MD-9188A has been designed to protect the equipment during shipment. The container and its associated packing material should be used to reship the unit.

When necessary to return equipment to Sunair for warranty or non-warranty repair, an authorization number is required. This number can be obtained from our Product Services Department:

TELEPHONE: (305) 525-1505,
TELEX: 51-4443,
CABLE: SUNAIR,
FACSIMILE: (305) 765-1322.

If the original shipping carton is not available, be sure to carefully pack each unit separately, using suitable cushioning material where necessary. Very special attention should be given to providing enough packing material around connectors and other protrusions from the unit. Rigid cardboard should be placed at the

corners of the equipment to protect against denting. DO NOT USE DUNNAGE (e.g., STYROFOAM PEANUTS) FOR PACKING PROTECTION; they may allow the unit to shift while being shipped, and, therefore, become dammaged.

When returning subassemblies or components for repair or replacement, be sure to pack each separately, using suitable cushioning material.

Shipment to be made PREPAID consigned to:

Sunair Electronics, Inc.
Product Services Department
3101 SW Third Avenue
Fort Lauderdale, Florida 33315-3389
U.S.A.

Plainly mark with indelible ink all mailing documents as follows:

US Goods Returned for Repair
Value For Customs - $ (Amt.)

Mark ALL SIDES of the package:

FRAGILE - ELECTRONIC EQUIPMENT!

NOTE: Before shipping, carefully inspect the package to be sure it is marked properly and is securely wrapped.

2.4 GENERAL INSTALLATION AND MOUNTING INFORMATION

Satisfactory operation of this equipment will depend upon the care and thoroughness taken during installation.

2.4.1 GENERAL INSTALLATION

For installation and use with the transceiver and other equipment, use this manual in conjunction with their respective operating manuals for complete installation information.

Before starting installation, carefully plan equipment locations to ensure that the operating environment is suitable and that adequate access for maintenance is provided.

If operated on DC power, check for correct polarity before applying power.

Installation of the MD-9188A ALE modem requires connecting the power line cord to the appropriate power source and two signal cables between the modem and the RT-9000 transciever. If an optional RCU-9310 Remote Control Unit and/or Auxilliary Terminal is present in the system, they must also be connected to the modem. Refer to chart below.

Refer to Figure 2.4.1.2 for the interconnection of the modem, transceiver, and optional remote control unit and appropriate power connection.

TO ADD	CONNECT	NOTE
AC Power	AC source to J8 on rear panel.	See Figure 2.4.1.1 and 2.4.1.2.
DC Power	DC source to J9 on rear panel.	See Figure 2.4.1.1 and 2.4.1.2.
RT-9000	Control lines from J8 (RT-9000) to XCVR Remote connector J4 on rear panel of MD-9188A.	See Figure 2.4.1.1, 2.4.1.2, and consult RT-9000 Manual.
	Audio lines from J5 (RT-9000) to XCVR Audio connector J1 on rear panel of MD-9188A.	See Figure 2.4.1.1, 2.4.1.2, and consult RT-9000 Manual.
RCU-9310	Control lines from J6 (RCU-9310) to Remote Control connector J5 on rear panel of MD-9188A.	See Figure 2.4.1.1, 2.4.1.2, and consult RCU-9310 Manual.
	Audio lines from J4 (RCU-9310) to Line Audio A/C connector J2 on rear panel of MD-9188A.	See Figure 2.4.1.1, 2.4.1.2, 2.4.1.3, and consult RCU-9310 Manual.
Aux Terminal	Control lines from Aux Terminal to Aux Terminal connector J6 on rear panel of MD-9188A.	See Figure 2.4.1.1, 2.4.1.2, and section 3.3.

2.4.2 BASE STATION INSTALLATION

Self-adhesive rubber pads, or 'feet,' are supplied with the MD-9188A so that it can be placed directly on a table, desk, or similar flat surface. Minimum clearance of one (1) inch at the sides and two (2) inches at the rear and top should be allowed to provide for adequate air flow for cooling. Figure 2.4.1.1 shows the applicable outline dimensions of the equipment and the location of inputs and outputs for signal and power lines.

The pinout for the auxiliary terminal RS-232 interface (J6) is as follows:

Pin#	Signal
2	TXD (1)
3	RXD (0)
4	RTS (1)
5	CTS (0)
6	DSR ------+
20	DTR ------+
7	GROUND
8	DCD (0)

Notes:
1) 1 = input to MD-9188A, 0 = output from MD-9188A.
2) Pin 6 is connected to pin 20 internally.

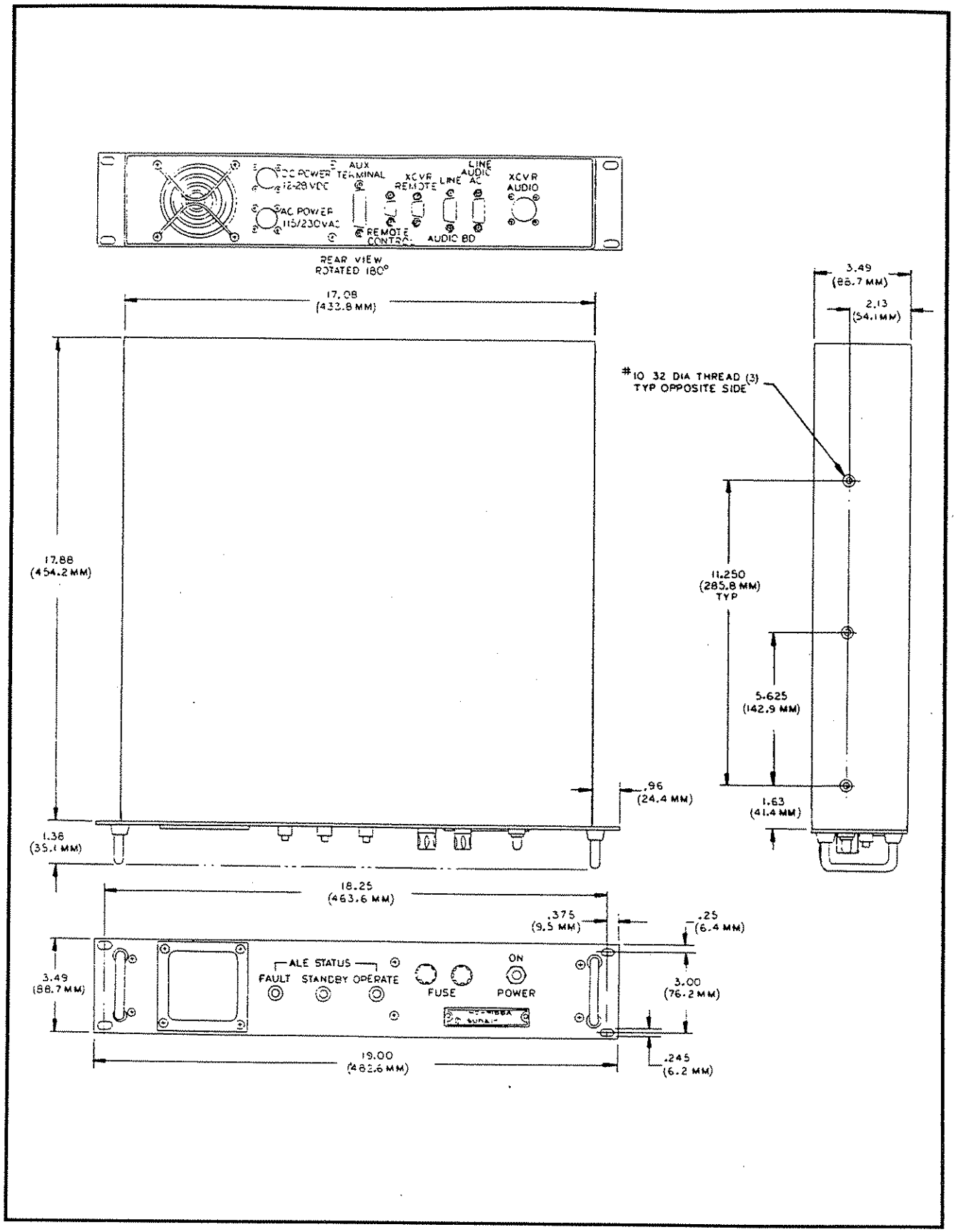

Figure 2.4.1.1 MD-9188A Outline Dimensions and Connector Locations.

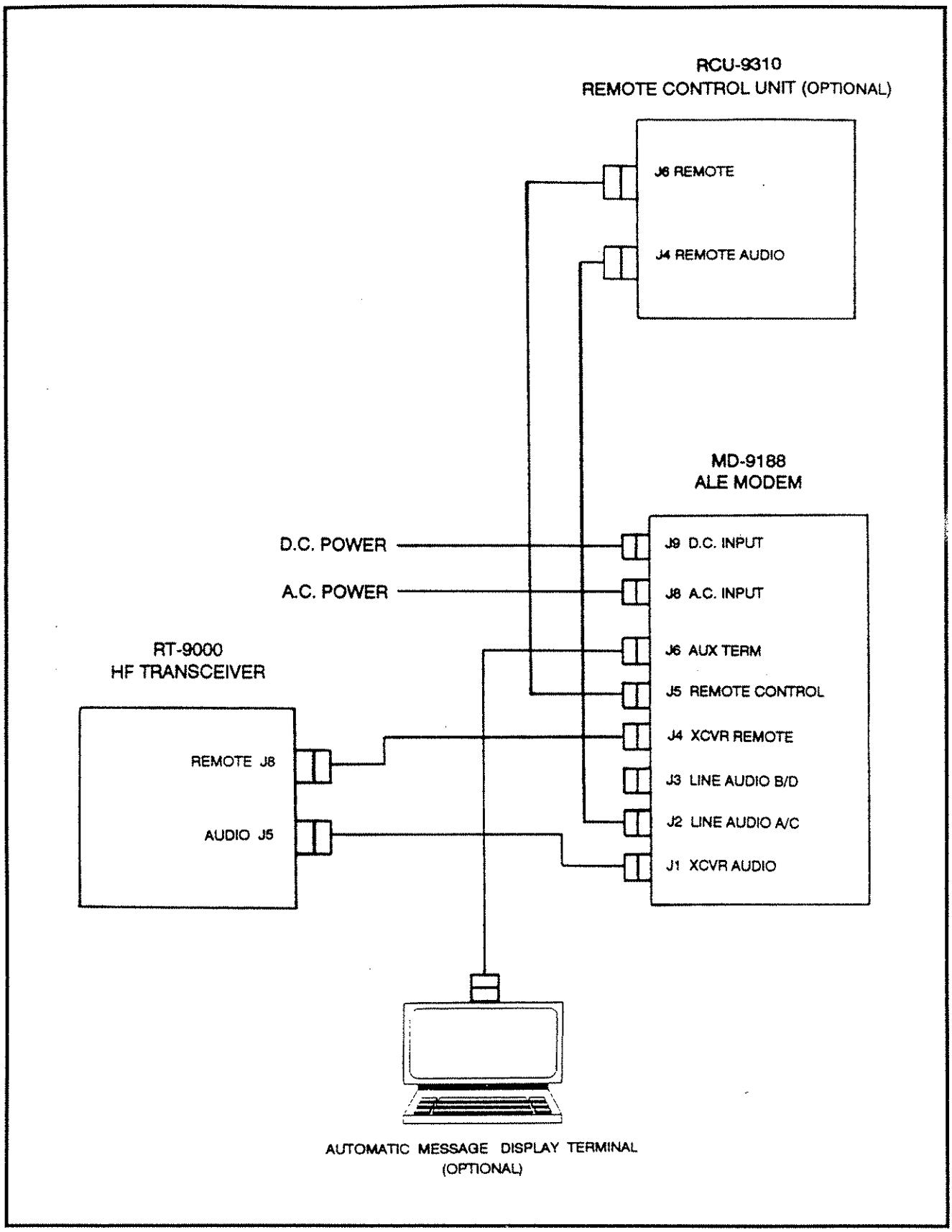

Figure 2.4.1.2 RT-9000/MD-9188A System Interconnect Diagram.

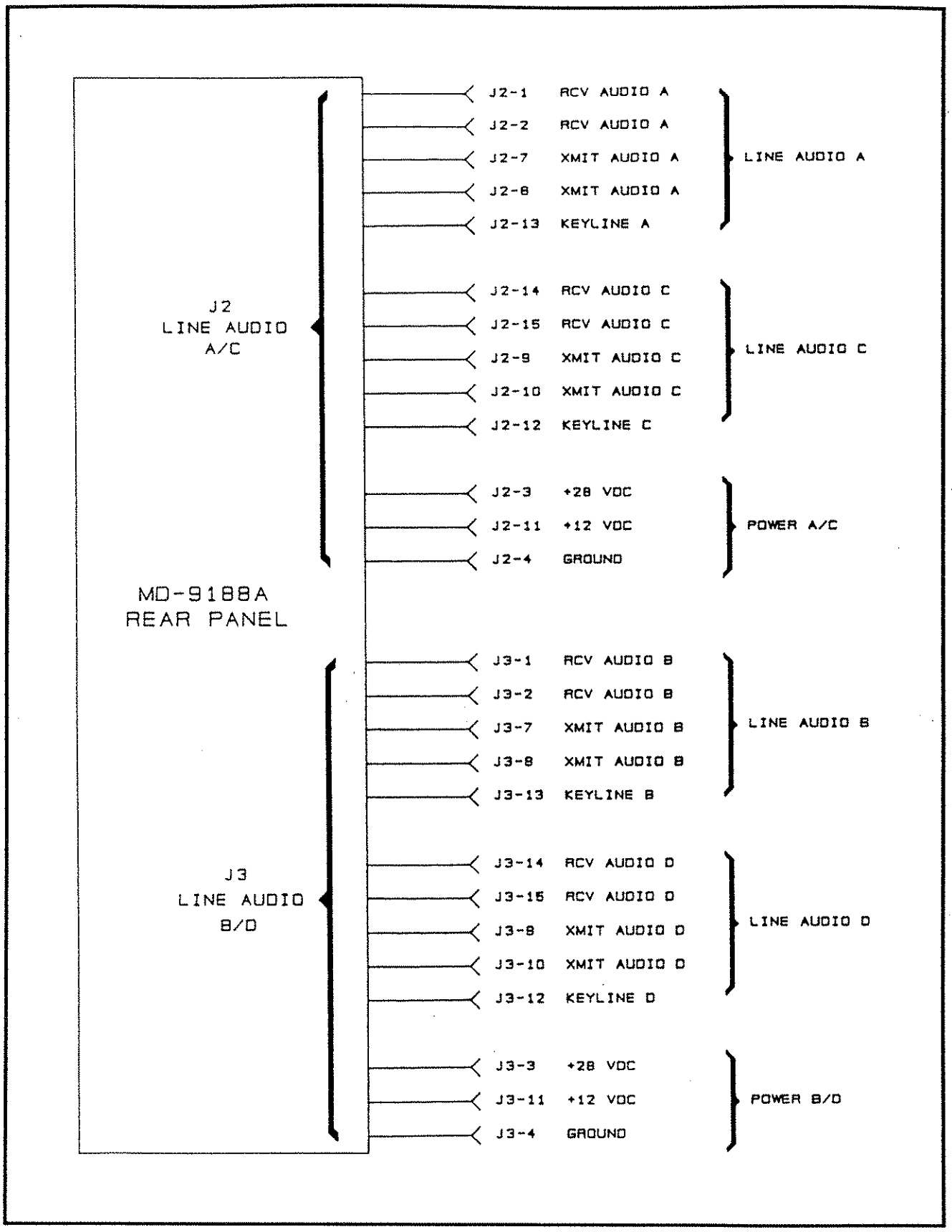

Figure 2.4.1.3 MD-9188A RCV/XMT Line Audio Interface.

2.4.3 RACK INSTALLATION

The modem may be conveniently mounted in a standard nineteen-inch (19") rack using the rackmount slots in the front panel. In the rack-mounted configuration, the MD-9188A requires a standard panel space of three and one-half inches (3-1/2") high. Refer to Figure 2.4.3 for assembly details.

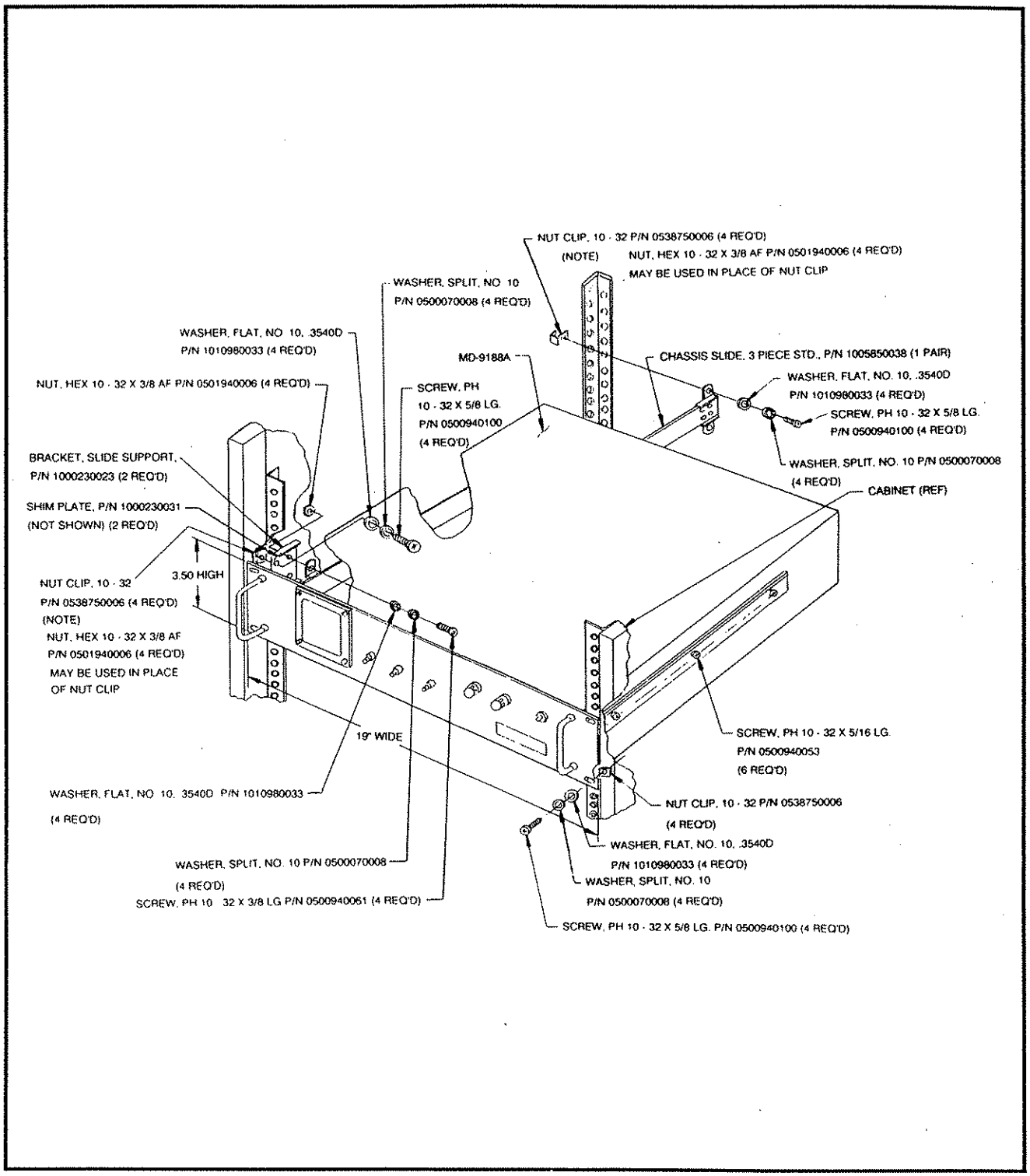

Figure 2.4.3 Installation of MD-9188A in Equipment Rack.

THIS PAGE INTENTIONALLY LEFT BLANK.

SECTION III

OPERATION

3.1 GENERAL

As noted in Section I, all ALE operations are controlled through the front panel of the RT-9000 transceiver. Detailed instructions for ALE programming and operation are included in the RT-9000 Installation and Operation Manual.

This section provides the operator with the location and use of the MD-9188A front panel controls and indicators. Refer to Figure 3.1.

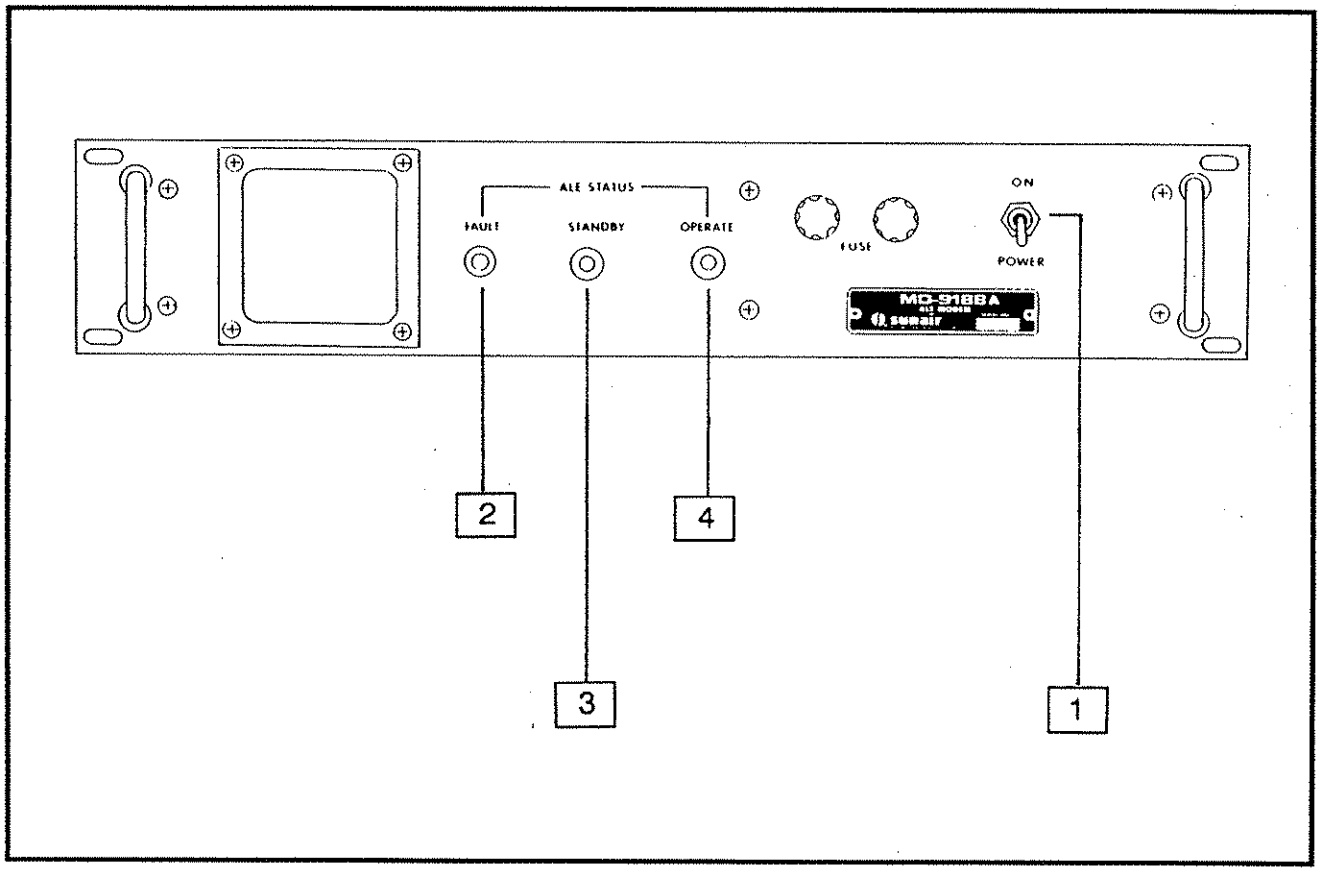

Figure 3.1 MD-9188A ALE Modem, Front Panel Controls and Indicators.

1 POWER ON/OFF SWITCH

When this switch is in the down position, the equipment is off. To apply power, simply place the switch in the 'ON' (up) position.

2 FAULT INDICATOR

When this indicator is on, there is a fault in the operation of the equipment. During the power on sequence, the FAULT indicator is turned on as a lamp test. After about 20 seconds, the FAULT indicator will turn off. If this indicator should turn on at any other time, an internal hardware or software failure has occurred. In this event, the modem will automatically perform a system reset sequence, which will subsequently turn the FAULT indicator off.

3 STANDBY INDICATOR

When this indicator is on, the modem is in the standby state, waiting for a scan command from the RT-9000 transceiver. During the power on sequence, the STANDBY indicator is turned on as a lamp test. After about 20 seconds, the power on sequence will complete, but the STANDBY indicator will remain on. If the modem switches to another state (FAULT or OPERATE) the STANDBY indicator will turn off.

4 OPERATE INDICATOR

When this indicator is on, the modem is in the operate state; i.e., the modem is performing either a transmit or a receive scan. During the power on sequence, the OPERATE indicator is turned on as a lamp test. After about 20 seconds, the OPERATE indicator will turn off. When a scan operation is requested by the RT-9000 transceiver, the OPERATE indicator will turn on. If the scan operation is halted, the OPERATE indicator will turn off.

3.2 PRIMARY OPERATIONS

Once the MD-9188A ALE modem is connected to the RT-9000 transciever and the transceiver is programmed for ALE, power up and use of the modem is relatively straightforward.

Place the front-panel 'POWER' switch in the 'ON' position. The cooling fan will start running and the three ALE status lights (FAULT, STANDBY, and OPERATE) on the front panel will all turn on, and then turn on individually.

After the power is turned on, the modem will perform a power up sequence that will last about 20 seconds. During this sequence, the modem cannot be operated. When the power up sequence is completed, the FAULT and OPERATE lights will turn off and the STANDBY light will remain on. The MD-9188A ALE modem is now ready for operation.

If the preceding events fail to occur, consult the troubleshooting guide in Section V.

NOTE: Whenever the MD-9188A is commanded to begin a receive or transmit scan, the STANDBY light will turn off. The OPERATE light will turn on and will remain on until:

a) the scan is halted by an RT-9000 command;
or b) a modem fault occurs.

If the scan is halted, the OPERATE light will turn off and the STANDBY light will turn on. If a modem fault occurs, the OPERATE light will turn off and the FAULT light will turn on. If the FAULT light turns on, consult the troubleshooting guide in Section V.

3.3 AUXILIARY TERMINAL USE

The MD-9188A supports the Automatic Message Display (AMD) protocol of FED-STD-1045 through the use of an auxiliary terminal to display, generate, and edit ALE messages. A DEC VT-102-compatible terminal, or a computer that supports VT-102 emulation, must be used.

3.3.1 TERMINAL SET UP

The terminal is connected to the 'AUX TERMINAL' connector on the rear panel of the MD-9188A (refer to Section II). Set up the terminal as follows:

Data Interface - RS-232 (without 20ma current loop)
Transmission Speed - 9600 bits/second
No Parity
Seven Data Bits
Two (2) Stop Bits

3.3.2 TERMINAL OPERATION

Turn on the terminal's power; then turn on the ALE modem. This allows the terminal to stabilze, with a refreshed screen, prior to the modem's power up sequence.

NOTE: When the modem is in the 'STANDBY' mode, the terminal screen may be refreshed by holding down the 'Ctrl' key while pressing 'R.'

Once the terminal and modem are powered up, the following heading will be displayed:

"AMD MESSAGE TRAFFIC"

The modem/terminal will be in one of four (4) AMD modes, as idicated by the display at the bottom of the screen:

[1] "MESSAGE EDIT ..... "EDITING DISABLED"
[2] "MESSAGE SEND ..... "EDITING DISABLED"
[3] "MESSAGE EDIT ..... "EDITING ENABLED"
[4] "MESSAGE SEND ..... "EDITING ENABLED"

The 'Return' ('Enter') key toggles the "MESSAGE EDIT/SEND" function, while the 'Esc' key toggles the "EDITING DISABLED/ENABLED" function.

The cursor movement (arrow) and 'Del(ete)' keys are not supported; the 'Backspace' key is used to correct errors.

NOTE: The keybord 'Caps Lock' (or 'Shift Lock') must be on during message creation or editing. FED-STD-1045 AMD protocol supports UPPER-CASE characters only.

Messages may be up to 90 alphanumeric characters in length. If the character buffer is overrun, a 'beep' will occur, signifying an error. An error beep will also be heard if the operator presses the 'Backspace' key when the cursor is in the first character position.

NOTE: Prior to sending a message, the EDITING function must be DISABLED, otherwise, the message will not be sent.

The following FED-STD-1045 ALE protocols permit the embedding of messages:

Single-Station Link
All Call
Net Call

Unless the MESSAGE EDIT function is enabled, messages will always be embedded and sent when these protocols are invoked.

Each time a message is sent, the terminal at the transmitting station will display:

"AMD MESSAGE TRANSMITTED: (MESSAGE .....)"

Each time a message is received, the terminal at the receiving station will display:

"AMD MESSAGE RECEIVED: (MESSAGE .....)"

The MD-9188A with the linking protection option supports the linking protection and time acquisition protocols of FED-STD-1049 and MIL-STD-188-141A. Operator control of these capabilities is achieved through the auxiliary terminal link protection menu located at the bottom of the auxiliary terminal screen.

The date is changed by holding down the 'Ctrl' key while pressing 'D'. When this action is performed, the old date is cleared and the cursor is shown at the date field of the link protection menu.

The date must be entered in the following format:

DD MMM YYYY

where	DD	=	day (2 digits: 01 - 31)
	MMM	=	month abbreviation (JAN, FEB, MAR etc.)
	YYYY	=	year (4 digits)

The DD, MMM, and YYYY fields must be seperated by pressing the SPACE bar. Date entry is terminated by pressing the 'Return' key. The 'Backspace' key is used to correct typing errors.

The time is changed by holding down the 'Ctrl' key while pressing 'T'. This action clears the old time and places the cursor at the time field of the link protection menu.

The time must be entered as Greenwich Mean Time in the following format:

HHMM.SS

where:	HH	=	hour (01 - 24)
	MM	=	minute (00 - 59)
	SS	=	second (00 - 59)

Time entry is terminated by pressing the 'Return' key. The 'Backspace' key is used to correct typing errors.

The time quality code that is displayed indicates the accuracy of the MD-9188A system time. Time accuracy is quantified as the width of the time uncertainty window. For example, if the time is accurate within +/-5 seconds, the width of the time uncertainty window is 10 seconds.

The time quality code vs. time uncertainty window width is tabulated below:

Time Quality Code	Time Uncertainty Window
0	none
1	20 ms
2	100 ms
3	500 ms
4	2 s
5	10 s
6	60 s
7	unbounded

Note: ms = milleseconds, s = seconds

The time quality can be changed by holding down the 'Ctrl' key while pressing 'U'. This action should be repeated until the desired time quality is displayed. Only time qualities of 1 - 7 are supported by the MD-9188A. The time quality should be set by the terminal operator whenever the time is changed.

The linking protection level is selected by holding down the 'Ctrl' key and repeatedly pressing 'P' until the desired linking protection level is displayed.

The supported linking protection levels and their characteristics are listed below:

Protection Level		PI Length	Algorithm Source	Class	Red/Black Separation
DISABLED	(AL-0)				
4	(AL-1)	2 s	Johnson/NIST	unclassified	no
3	(AL-2)	60 s	Johnson/NIST	unclassified	no

Level 3 provides the highest security; however, the other levels may be selected for interoperability reasons.

More accurate time can be acquired from another station by holding down the 'Ctrl' key and pressing 'A'. Once this action is performed, the ACQUIRE TIME field of the link protection menu changes from IDLE to WAITING. The next time a single-station call is performed, the MD-9188A acquires the time from the called station. If the quality of the time received from the other station is better (i.e., lower time quality code), the MD-9188A changes its time to that of the called station, and the menu indicator is changed to IDLE. In this case, the MD-9188A also sets its time quality code to one higher than that of the called station. On the other hand, if the obtained time is not better, the time response is discarded, and the menu indicator is not changed.

A time acquisition request can be cancelled by holding down the 'Ctrl' key and pressing 'A'. Once this action is performed, the ACQUIRE TIME field of the link protection menu should indicate IDLE.

In order to perform a time acquisition request, the date and time must be accurate to within one minute.

THIS PAGE INTENTIONALLY LEFT BLANK.

SECTION IV

THEORY OF OPERATION

4.1 GENERAL

The theory of operation of the MD-9188A Modem is presented in the following format:

	Corresponding Section #'s:
HARDWARE ASSEMBLIES	4.2
Host Processor Assembly	4.2.1
Digital Signal Processor Assembly	4.2.2
Audio/Display Assembly	4.2.3
Audio Selector Assembly	4.2.4
Power Supply Assembly	4.2.5
SOFTWARE	4.3
ALE Message Transmission Software	4.3.1
ALE Message Reception Software	4.3.2

4.2 HARDWARE ASSEMBLIES

Figure 4.2 shows a block diagram of the major subsections of the MD-9188A and how they interface to each other and the RT-9000 transceiver. The major subsections are the host processor assembly, the digital signal processor assembly, the audio/display assembly, and the power supply assembly. These assemblies are described below.

4.2.1 HOST PROCESSOR ASSEMBLY

The host processor assembly performs ALE message management and process control within the modem. This includes transmit message assembly from supplied ALE IDs, ALE ID extraction from the ALE receive message, redundant word interleave/deinterleave, Golay encode/decode, and tribit symbol conversions. All command communications and ALE scan control operations between the MD-9188A and the RT-9000 transceiver are accomplished through the host processor. The host processor consists of and IBM PC/AT-compatible motherboard, a daughtercard containing two RS-232 serial data ports and a parallel data port, and a daughtercard containing a ROM (read only memory) disk drive.

4.2.2 DIGITAL SIGNAL PROCESSOR ASSEMBLY

The digital signal processor assembly performs ALE waveform generation and detection, channel signal-to-noise ratio (SNR) measurement, and channel traffic activity measurement. Symbol data and other information is passed between the host processor assembly and the digital signal processor.

Data transfer requests are interrupt-driven from the digital signal processor or polled by the host processor. The digital signal processor assembly uses an AT&T DSP32C and an AT&T T7525 high-precision PCM coder/decoder.

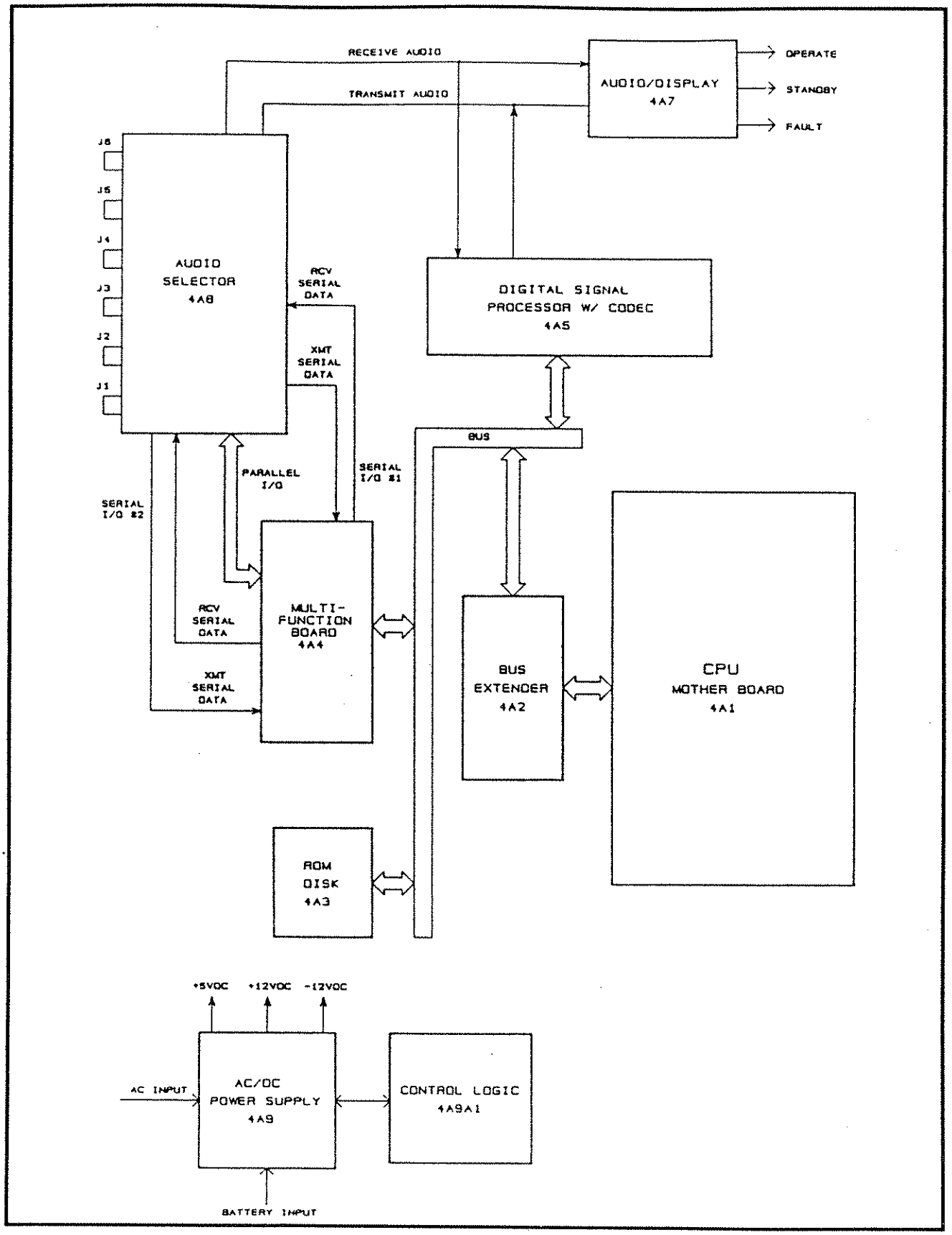

Figure 4.2 MD-9188A ALE Modem, Block Diagram.

4.2.3 AUDIO/DISPLAY ASSEMBLY

The audio/display assembly provides interface between the RT-9000 transceiver and the MD-9188A front panel, and the host processor and digital signal processor assemblies. Buffering of control lines for the keyline, scan interrupt, and front panel display indicators is provided on this assembly. In addition, circuitry is also provided for translation between doubly-balanced, 600-ohm audio signals externally and single-ended, 8-ohm audio internally.

4.2.4 AUDIO SELECTOR ASSEMBLY

The audio selector assembly provides switched access to the transmit and receive audio of the RT-9000 transceiver. Up to four audio receive and/or transmit lines can be attached to the RT-9000 through the assembly (see section 2.4.1). Each audio source may have its own keyline to control the transceiver. The operation of the audio selector assembly is performed by the RT-9000 and is transparent to the operations of the modem. When the modem keyline is active, the modem audio overrides the audio from the switched audio sources. In addition, the audio selector assembly provides interface between XCVR Audio (J1), Line Audio A/C (J2), Line Audio B/D (J3), XCVR Remote (J4), Remote Control (J5), and the Aux. Terminal (J6) connectors on the rear panel.

4.2.5 POWER SUPPLY ASSEMBLY

The power supply assembly consists of an input transformer, rectifier and filter circuits, a DC-to-DC converter, and relay-controlled changeover circiuts. With both AC and DC power connected, the supply will automatically sense AC line reductions or failure and switch to the DC backup voltage.

Supply voltages and ground are provided through standard power supply connectors to the host processor board.

Supply voltage and ground are provided to the audio/display assembly via a disk drive power supply cable and Molex connector. An additional disk drive power supply connector is provided to allow the modem to supply power to an external floppy disk drive for system testing.

A power supply partition encloses the power supply, providing EMI shielding while allowing air flow through the modem.

4.3 MODEM SOFTWARE PROCESSES

The host processor and digital signal processor assemblies provide the hardware platform for the modem software. It is the software that gives most of the performance characteristics to the MD-9188A. To the operator, the software consists of two major elements. These are the ALE message transmission software and the ALE message reception software. A third element, the automatic link establishment software, uses the two major elements to achieve the main objective of the MD-9188A. All three software elements are described below.

4.3.1 ALE MESSAGE TRANSMISSION SOFTWARE

Figure 4.3.1 shows the processes of ALE message formation and symbol generation. First, the ALE self ID and call ID are acquired. The self ID comes from the Sunair RT-9000 transceiver when a receive or transmit scan is requested. The call ID either comes from the RT-9000 when a transmit scan is requested or from the calling station's message during a receive scan. The characters must come from the basic 38-character ASCII set, excluding the wildcard character (the question mark, '?').

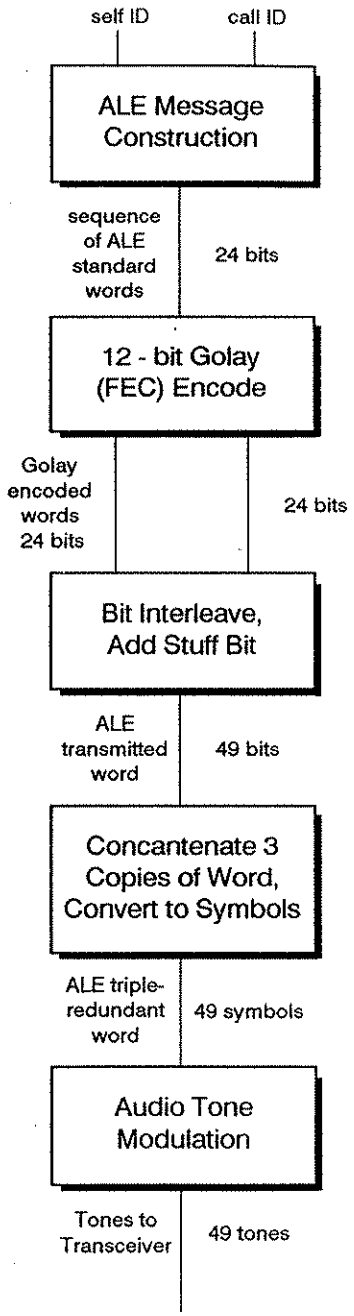

Figure 4.3.1 ALE Message Transmission Process.

IDs are broken into three-character words of 21 bits, with the 'at-sign' (@) character appended as needed to fill out the last word. Three preamble bits are then added to the beginning of each word according to the word's position in the message. These combined elements form the 24-bit ALE standard word as described in MIL-STD-188-141A and FED-STD-1045.

Next, the 24-bit standard word is broken into two 12-bit elements which are then Golay encoded for forward error correction (FEC). Mode 3/4 (up to 3 errors detected and corrected, up to 4 errors detected but not correctable) is used for the Golay encoding of both of the word elements. The two 24-bit encoded elements are then interleaved to form a 48-bit word and a 'stuff bit' added as the 49th bit of the complete transmitted word. Each transmitted word is sent three times in succession forming one ALE redundant word. The bits of the redundant word are grouped into 49 symbols of three bits each. The 49 symbols of the redundant word are then sent to the digital signal processor for modulation.

The modulation process takes each symbol and produces a corresponding tone with a duration of 8 milliseconds. The transition between each tone occurs at a zero-crossing point in the signal waveform and each tone has the same amplitude. The transmission of the 49 symbols of one ALE redundant word occurs in the digital signal processor while the next redundant word is being created by the host processor.

4.3.2 ALE MESSAGE RECEPTION SOFTWARE

Figure 4.3.2 on the following page, shows the processes of ALE symbol detection and message reception. Symbol detection is accomplished in the digital signal processor. During the ALE message receive operation, the digital signal processor monitors the audio channel for ALE tones. Any tones received must belong to the ALE tone constellation and have the proper timing. The detection algorithm synchronizes with a sequence of ALE tones as they are received. Synchronization is maintained even under suboptimal channel conditions such as multipath and broadband interference.

As each symbol is detected, a real-time estimate of the ratio of the signal- and noise-to-noise plus interference (SINAD) is calculated.

The SINAD value is passed to the host processor along with the symbol value. The host processor accumulates the SINAD values to form an average SINAD value for the ALE message. This average SINAD value is used for link quality analysis (LQA) to determine if the channel is of acceptable quality for use. The symbols are buffered until a sufficient number are acquired to form an ALE redundant word. A majority vote is taken of the three transmitted words of the redundant word and a count of the number of non-unanimous votes is made for the two 24-bit Golay encoded words and the stuff bit. The two words are then Golay decoded (using mode 3/4) and forward error corrected to yield a received 24-bit ALE standard word.

After the ALE redundant word is decoded into the ALE standard word, a number of tests are performed to determine redundant word sync, bit error rate, and proper message reception. The number of error bits detected in each Golay word is used along with non-unanimous bit count to determine ALE redundant word synchronization. The non-unanimous bit count is also used for bit error rate (BER) estimation. When redundant word sync is achieved, each standard word is checked for proper ID characters and preamble bits in the context of the word's position in the received message (i.e., message parsing). The address characters in the call ID of the message must match those of the self ID of the receiving station. The address characters in the self ID of the message must also match those of the call ID that the receiving station is listening for if the call ID is already known.

Upon successful link establishment, the self ID, call ID, and an LQA figure of merit are sent to the RT-9000 transceiver. The LQA figure of merit is an alphanumeric character that is related to the SINAD of the message in dB. This information is displayed on the message display of the RT-9000.

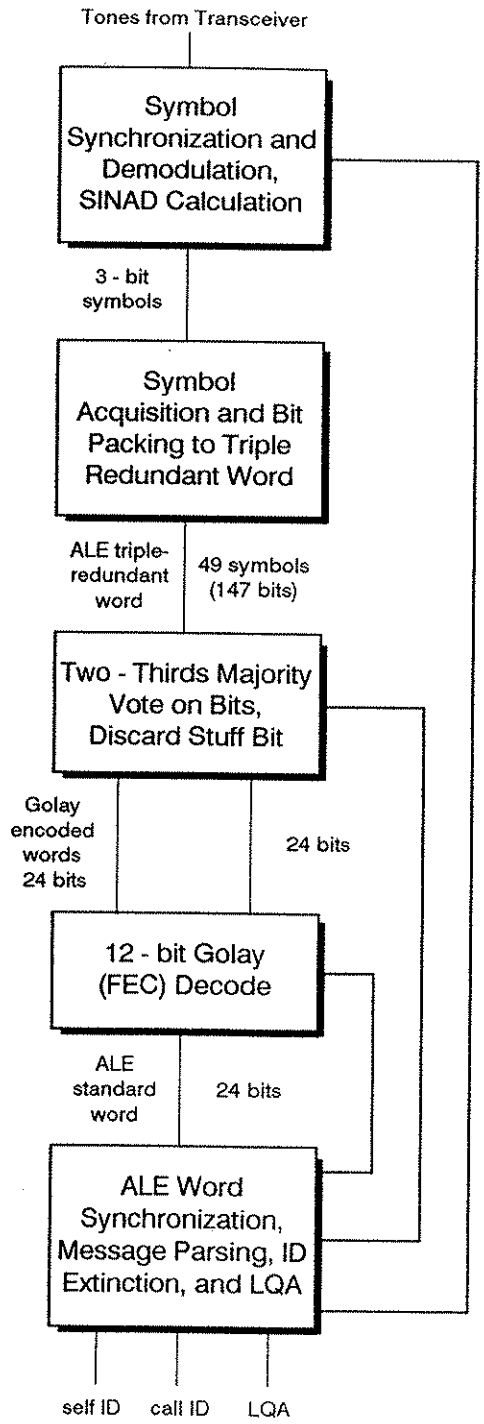

Figure 4.3.2 ALE Message Reception Process.

4.3.3 AUTOMATIC LINK ESTABLISHMENT SOFTWARE

The MD-9188A uses a matrix data structure to keep track of link quality. The matrix rows correspond to the various station IDs, while the matrix columns represent the different channels, or frequencies. The matrix is updated for each communication between another station on a given channel. This information is used by the MD-9188A to select the best frequency for communications with another station.

If after two hours, no communications have occurred between a given station, the link quality matrix contents for that station are discarded. This forces the MD-9188A to re-evaluate the link quality the next time that station is called.

When another station is called, the link establishment process used by the MD-9188A is dependent on the age of the information in the link quality matrix. If the information is up to date, the MD-9188A tries to link using the best frequency. If the link attempt fails, the MD-9188A tries the next best frequency. This process continues until a successful link, or all channels have been tried at least twice.

If the link quality information in the matrix is not current, the MD-9188A performs a frequency evaluation process before trying to link. The MD-9188A makes one complete pass through all channels to measure the link quality, and records this information in the matrix. Once this process is completed, the MD-9188A attempts to link starting with the frequency that had the highest measured link quality.

THIS PAGE INTENTIONALLY LEFT BLANK.

SECTION V

FAULT ISOLATION/MAINTENANCE AND REPAIR

5.1 GENERAL

This section provides guidelines for Fault Isolation, maintenance and repair to the Lowest Repairable Unit (LRU) level.

NOTE: There are no user adjustments in this modem. All adjustments are preset at the factory and should not be attempted in the field. Replacement PC board assemblies contain preset factory adjustments and require no further adjustments on installation.

5.2 DISASSEMBLY

Disassembly should be only to the extent necessary to accomplish the repair or replacement of the defective LRU. Procedures for disassembly of assemblies are given in the following paragraphs.

5.3 TEST EQUIPMENT REQUIRED or EQUIVALENT

Multimeter	Simpson 260
Digital Voltmeter	Leader LDM-853A

5.4 MODEM FAULT ISOLATION GUIDE

NOTE: The following PC assemblies have factory set DIP switches and/or jumper plugs. When the POSSIBLE TROUBLE refers to these assemblies check the switch settings and/or jumpers to be sure they have not changed from the factory settings.

See the following illustrations for reference:

CPU Mother Board Assembly 4A1, see Figure 5.4.1.

ROM Disk Board Assembly 4A3, see Figure 5.4.2.

Multifunction Board Assembly 4A4, see Figure 5.4.3.

Digital Signal Processor Assembly 4A5, see Figure 5.4.4.

MODEM FAULT ISOLATION GUIDE.

SYMPTOM(s)	POSSIBLE TROUBLE(s)	CORRECTIVE ACTION(s)
AC Power Only: When power switch is turned ON, the status lights fail to light and power supply fan does not run.	1. No AC power. 2. Open front panel AC fuses 4AF1 and F2. 3. Faulty AC/DC power supply 4A9.	1. Check for AC input. 2. Replace F1 and F2 as required. If fuses open again, troubleshoot power supply. See section 5.5. 3. Troubleshoot power supply. See section 5.5.
DC Power Only: When power switch is turned ON, the status lights fail to light and power supply fan does not run.	1. No DC power. 2. 4A9 F1 open. 3. Faulty AC/DC power supply 4A9.	1. Check for DC input. 2. Remove modem from rack and remove top cover by removing the 11 screws, see Figure 5.4.5. Remove Power Supply Cover, see Figure 5.4.5, by removing the 6 screws. Replace F1 as required, see Figure 5.4.7. If F1 opens again, troubleshoot power supply, see section 5.5. 3. Troubleshoot power supply, see section 5.5.
AC or DC Power: When power switch is turned ON the status lights turn ON, but power supply cooling fan 4AB1 does not run.	1. 4AB1 faulty. 2. Faulty 4A9 U2 or associated circuitry.	1. Use DVM to measure 4A9J1 pins 5+ and 6- for +12 VDC. Remove and replace 4AB1 as required. 2. Use normal troubleshooting techniques and check U2 and associated circuitry. Remove and replace faulty components or Remove and replace 4A9 power supply P.C. board. Return faulty 4A9 to factory for repair. See Figures 5.4.5 and 5.4.6.
AC or DC Power: When power switch is turned ON 4AB1 runs but one or more of the status lights do not light.	1. Faulty lamps. 2. Faulty Audio/Display board assembly 4A7.	1. Remove and replace lamps as required. 2. Remove and replace 4A7. Return faulty 4A7 to factory for repair. See Figures 5.4.6 and 5.4.8.

MODEM FAULT ISOLATION GUIDE, *Continued ...*

SYMPTOM(s)	POSSIBLE TROUBLE(s)	CORRECTIVE ACTION(s)
AC or DC Power: When power switch is turned ON 4AB1 runs, but status lights fail to light.	1. Faulty Audio/Display board assembly 4A7. 2. Faulty Multifunction board assembly 4A4 NOTE: -12 V from power supply 4A9 is used only by 4A4 and 4A5 assemblies. To make sure fault is not caused by power supply 4A9, Use DVM and check -12 V out of power supply at J3, pin 6, before replacing 4A4. If -12 V is faulty go to section 5.5 for troubleshooting power supply 4A9. 3. Faulty power supply assembly 4A9.	1. Remove and replace 4A7. Return faulty 4A7 to factory for repair. 2. See Figures 5.4.6 and 5.4.9. Remove subassemblies 4A2 thru 4A5. Reinstall as in Figure 5.4.9. Remove and replace 4A4. Return faulty 4A4 to factory for repair. 3. Troubleshoot power supply, see section 5.5.
AC or DC Power: When power switch is turned ON, all status lights turn on and remain lit. (Modem does not go to STANDBY state).	1. Faulty CPU Mother board assembly 4A1, ROM Disk board assembly 4A3, Multifunction board assembly 4A4, or Audio/Display board assembly 4A7. NOTE: Before replacing 4A4 assembly use DVM to check for -12 V output at 4A9J3 pin 6. If -12 V is faulty, go to section 5.5 for troubleshooting power supply 4A9.	1. See Figure 5.4.6. Remove subassemblies 4A2 thru 4A5, Reinstall as in Figure 5.4.9. Remove and replace 4A3, 4A4, 4A7, and 4A1 assemblies one at a time to determine faulty board. Return faulty board assembly to factory for repair.
The modem performs power up sequence properly but does not go into the OPERATE state when commanded to perform a receive or transmit scan.	1. The serial data cable is not properly connected to modem or the RT-9000. 2. Faulty Multifunction board 4A4.	1. See Figure 2.4.1.2 and make sure Serial Data Cable is properly connected. 2. See Figures 5.4.6 and 5.4.9. Remove and replace 4A4 assembly. Return faulty 4A4 assembly to factory for repair.

MODEM FAULT ISOLATION GUIDE, *Continued ...*

SYMPTOM(s)	POSSIBLE TROUBLE(s)	CHECKS & CORRECTIVE ACTION(s)
	NOTE: Before replacing 4A4 assembly use DVM to check for -12 V output at 4A9J3 pin 6. If -12 V is faulty, go to section 5.5 for troubleshooting power supply 4A9.	
	3. Faulty I/O board assembly 1A2A8 in RT-9000.	3. Refer to RT-9000 manual, section 5.4.
While modem is performing a receive scan, the modem does not respond to ALE messages that are being received.	1. The audio cable is not properly connected to the MD-9188A or the RT-9000.	1. See Figure 2.4.1.2, and check cable connections.
	2. Faulty Multifunction board 4A4, Digital Signal Processor assembly 4A5, Audio/Display assembly 4A7 or Audio Selector assembly 4A8.	2. See Figure 5.4.6, remove subassemblies 4A3 thru 4A5. Reinstall as in Figure 5.4.9. Remove and replace assemblies 4A4 and 4A5 one at a time. If symptom still exists, see Figure 5.4.8. Remove and replace 4A7. If symptom still exists, see Figure 5.4.9. Remove and replace 4A8. Return faulty board assembly to factory for repair.
	NOTE: Before replacing 4A4 or 4A5 assemblies, use DVM to check for -12 V output at 4A9J3 pin 6. If -12 V is faulty go to section 5.5 for troubleshooting power supply 4A9.	
	3. Faulty 1A2A1 CPU or 1A2A3 Audio PC assemblies in the RT-9000 Transceiver.	3. Refer to RT-9000 manual, Section 5.4.
While performing a transmit scan, the modem does not key the transmitter and/or does not appear to be generating tones.	1. The audio cable is not properly connected to the MD-9188A or the RT-9000.	1. See Figure 2.4.1.2. Check cable connections.
	2. Faulty Multifunction board 4A4, Digital Signal Processor assembly 4A5, Audio/Display assembly 4A7 or Audio Selector assembly 4A8.	2. See Figure 5.4.6. Remove subassemblies 4A3 thru 4A5. Reinstall as in Figure 5.4.9. Remove and replace assemblies 4A4 and 4A5 one at a time. If symptom still exists, refer to Figure 5.4.8. Remove and replace 4A7. If symptom still exists, see Figure 5.4.9. Remove and replace 4A8. Return faulty board assembly to factory for repair.

MODEM FAULT ISOLATION GUIDE, *Continued ...*

SYMPTOM(s)	POSSIBLE TROUBLE(s)	CHECKS & CORRECTIVE ACTION(s)
	NOTE: Before replacing 4A4 or 4A5 assemblies, use DVM to check for -12 V output at 4A9J3 pin 6. If -12 V is faulty go to section 5.5 for troubleshooting power supply 4A9.	
	3. Faulty 1A2A1 CPU or 1A2A3 Audio PC assemblies in the RT-9000 Transceiver.	3. Refer to RT-9000 manual, Section 5.4.
While the modem is in operation, the FAULT state is illuminated momentarily (i.e., the FAULT status light is ON and the STANDBY and OPERATE status lights are OFF) and the modem goes to the STANDBY status.	1. Faulty Multifunction board 4A4, Digital Signal Processor assembly 4A5. NOTE: Before replacing 4A4 assembly, use DVM to check for -12 V output at 4A9J3 pin 6. If -12 V is faulty go to section 5.5 for troubleshooting power supply 4A9.	1. See Figure 5.4.6. Remove subassemblies 4A3 thru 4A5. Reinstall as in Figure 5.4.9. Remove and replace 4A4 and 4A5 one at a time. Return faulty board to factory for repair.

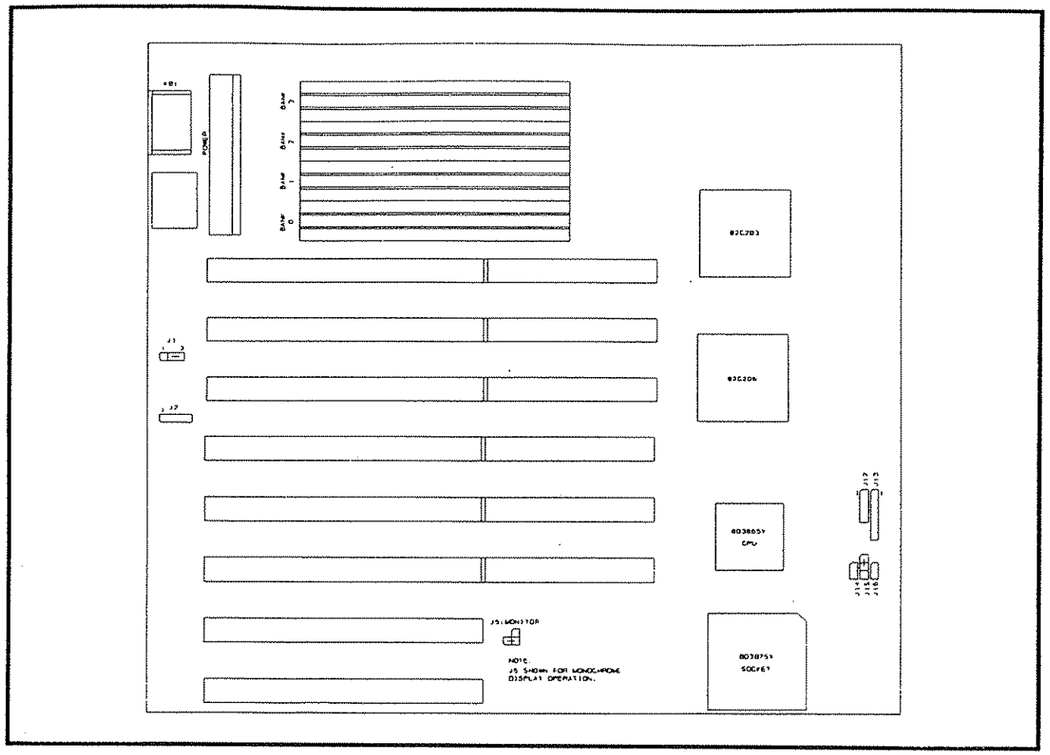

Figure 5.4.1 CPU Mother Board Assy 4A1, Jumper Plug Locations.

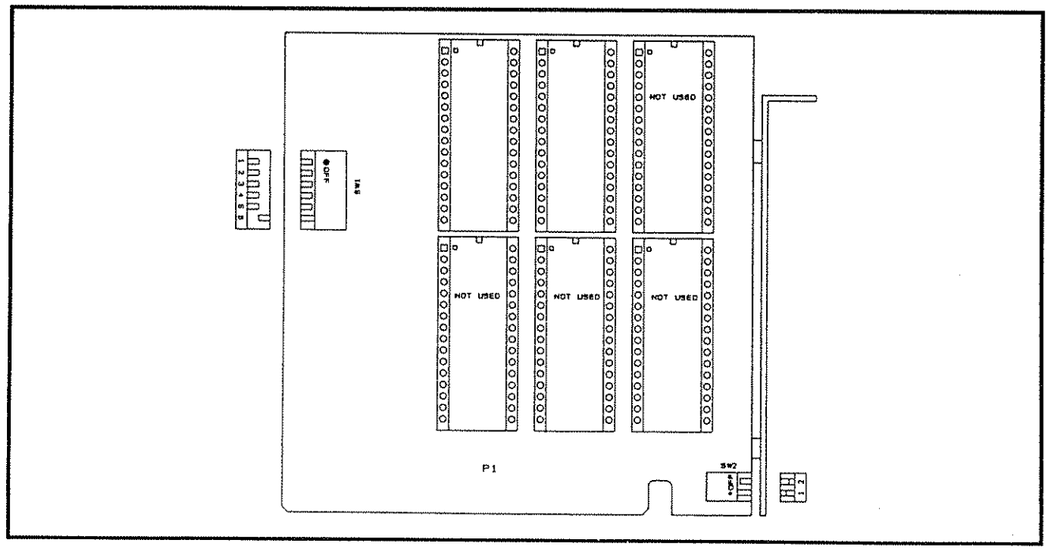

Figure 5.4.2 ROM Disk Board Assy 4A3, DIP Switch Settings.

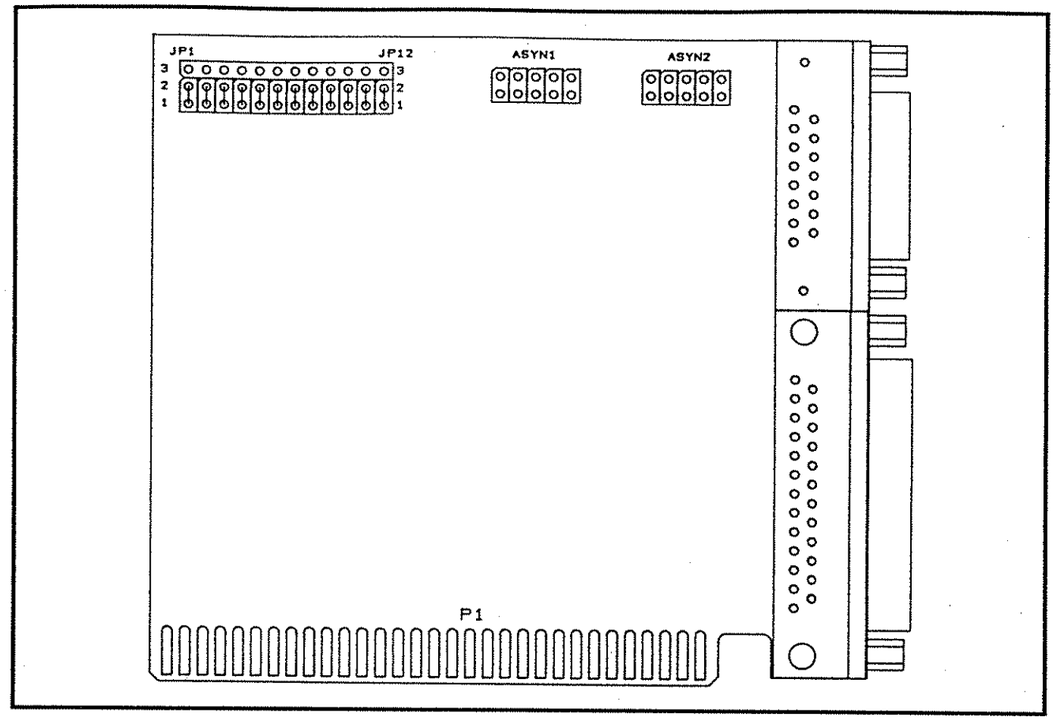

Figure 5.4.3 Multifunction Board Assy 4A4, Jumper Plug Locations.

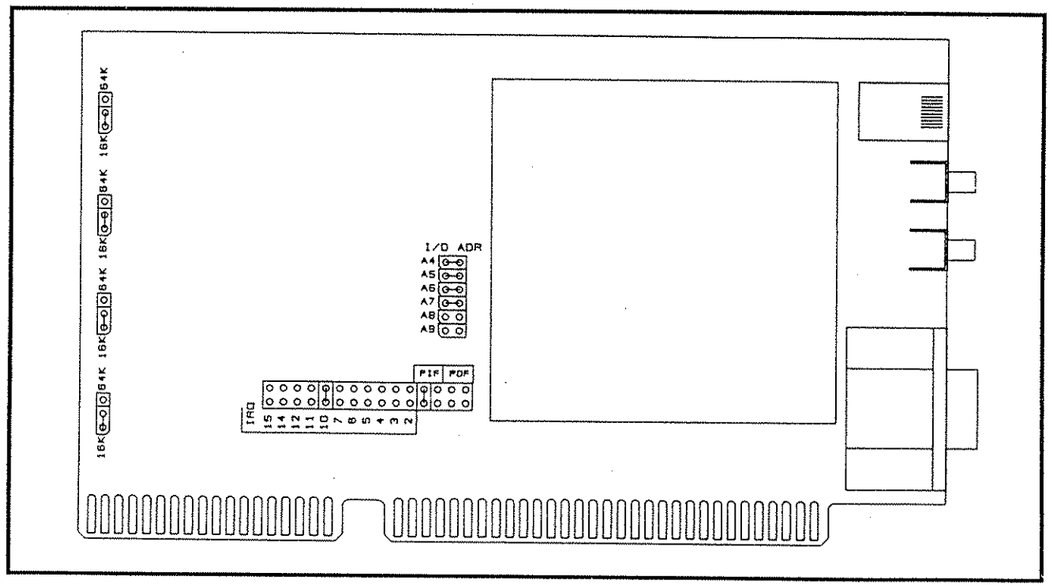

Figure 5.4.4 Digital Signal Processor Assy 4A5, Jumper Plug Locations.

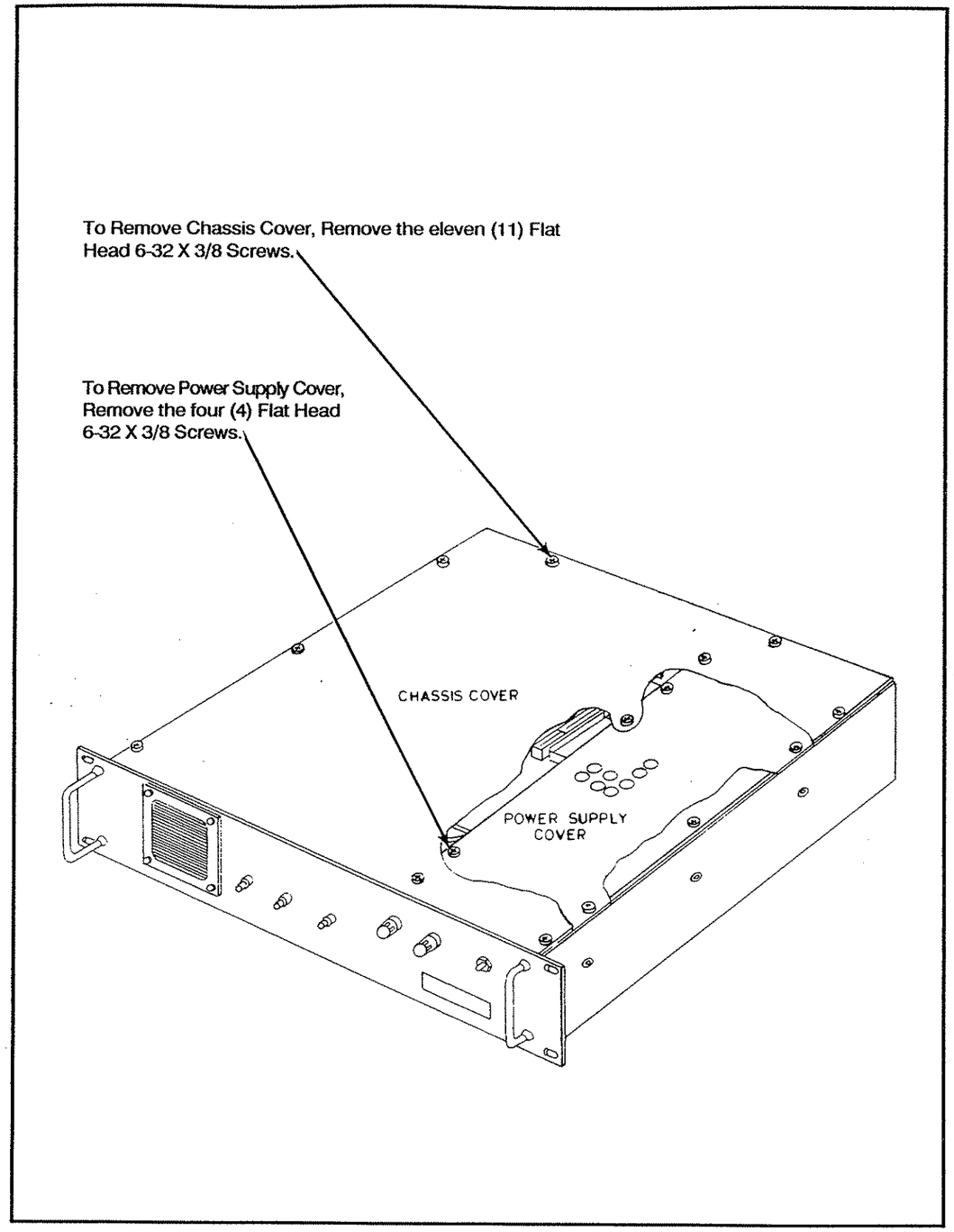

Figure 5.4.5 Removal/Installation of Chassis and Power Supply Covers.

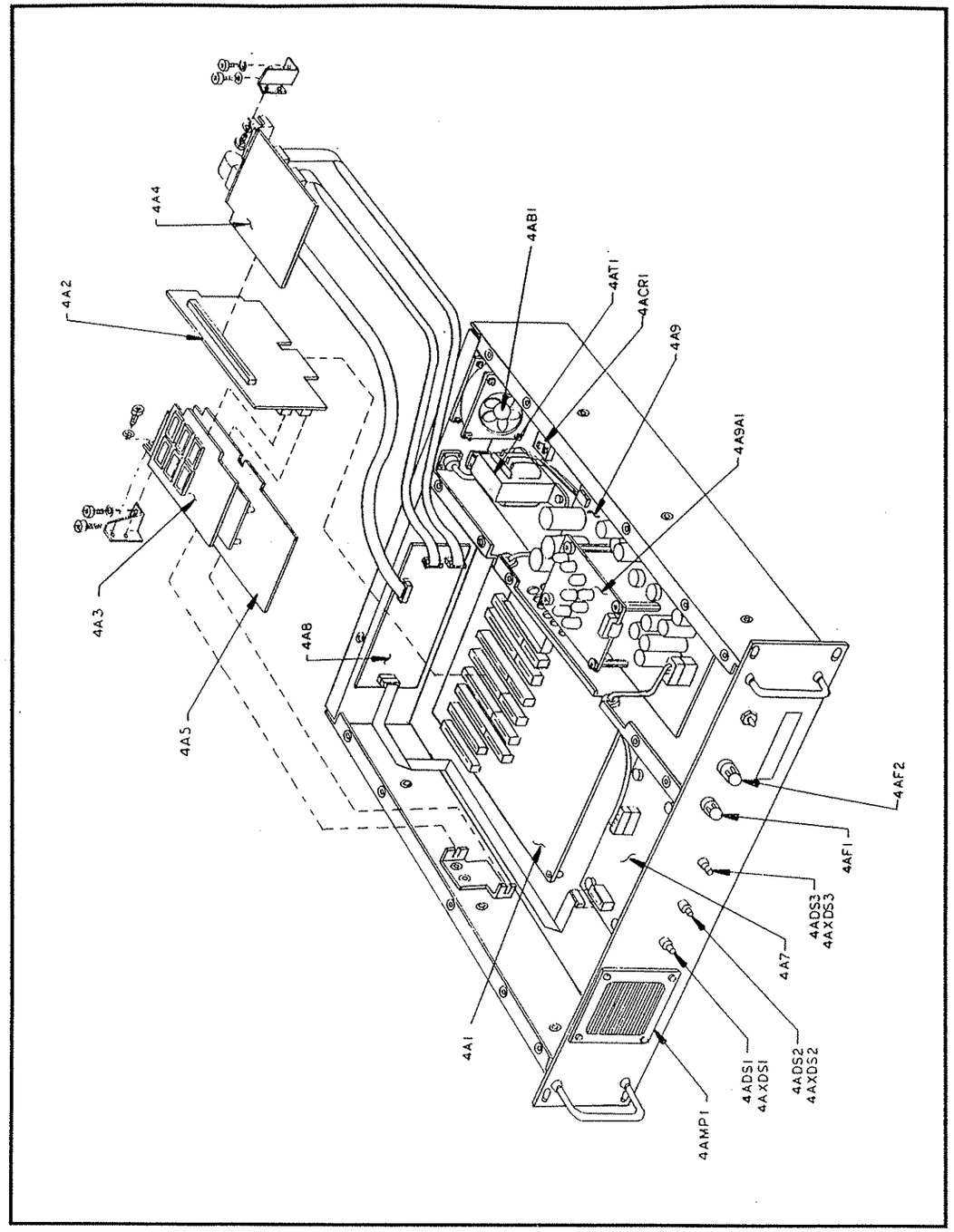

Figure 5.4.6 Removal/Installation of MD-9188A Modules.

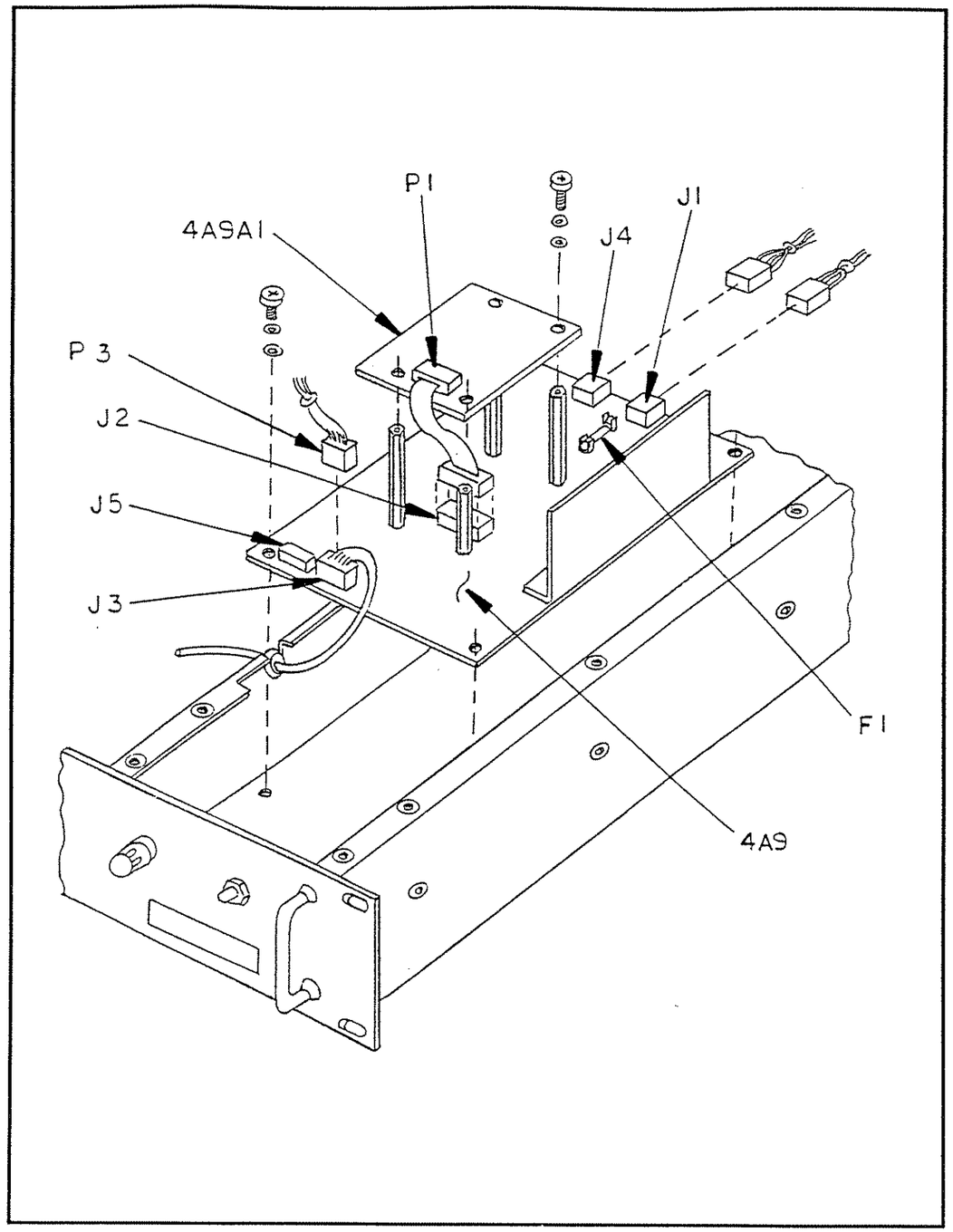

Figure 5.4.7 Removal/Installation of Power Supply 4A9.

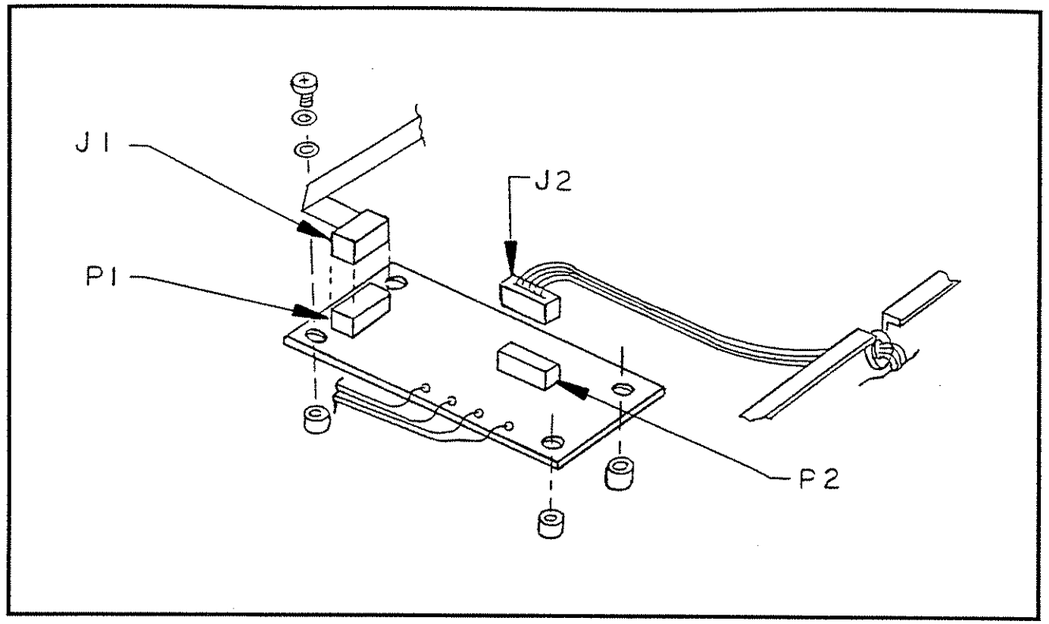

Figure 5.4.8 Removal/Installation of Audio/Display Board 4A7.

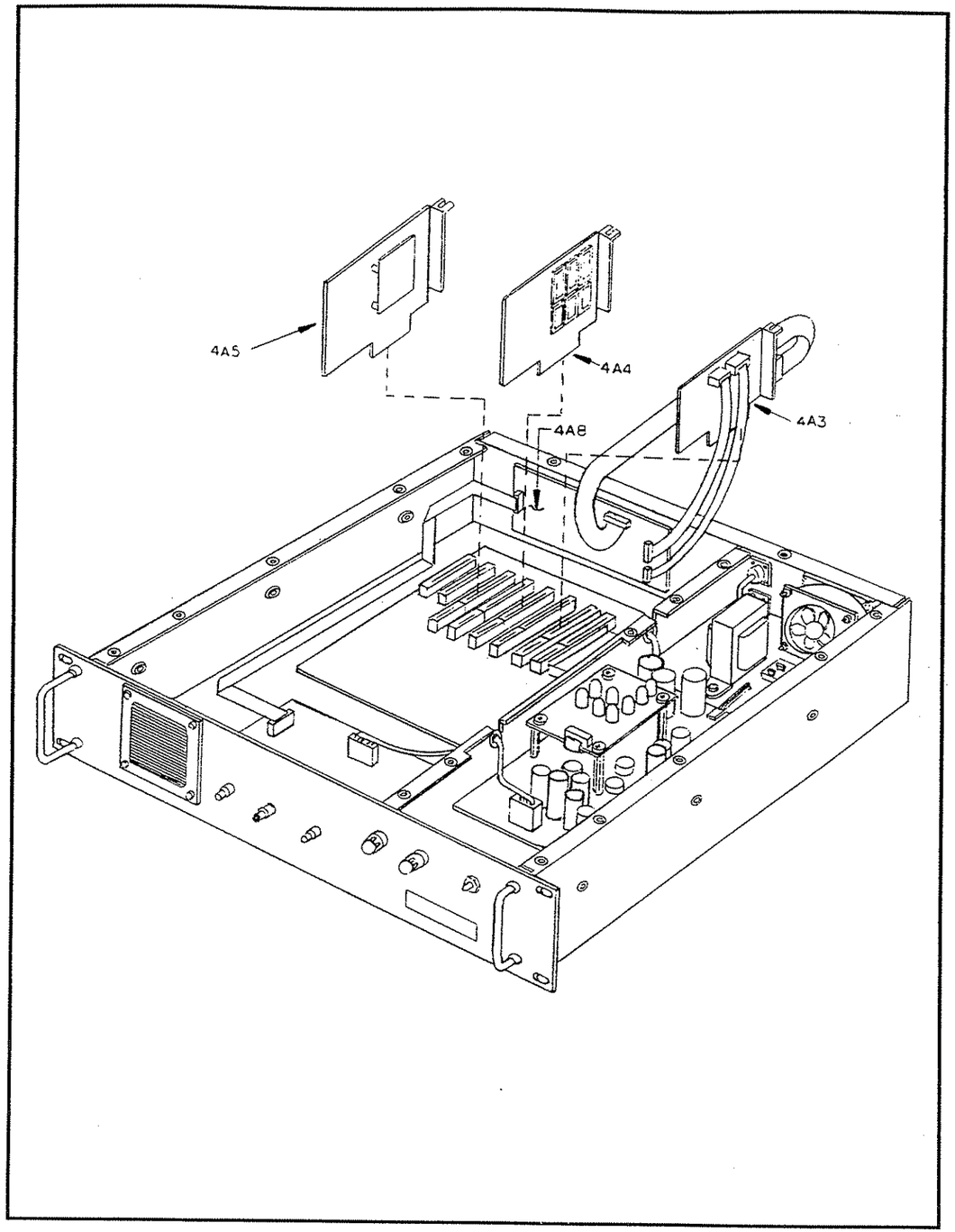

Figure 5.4.9 Alternate Plug-In for ease of substitution of PC Assemblies during Fault Isolation.

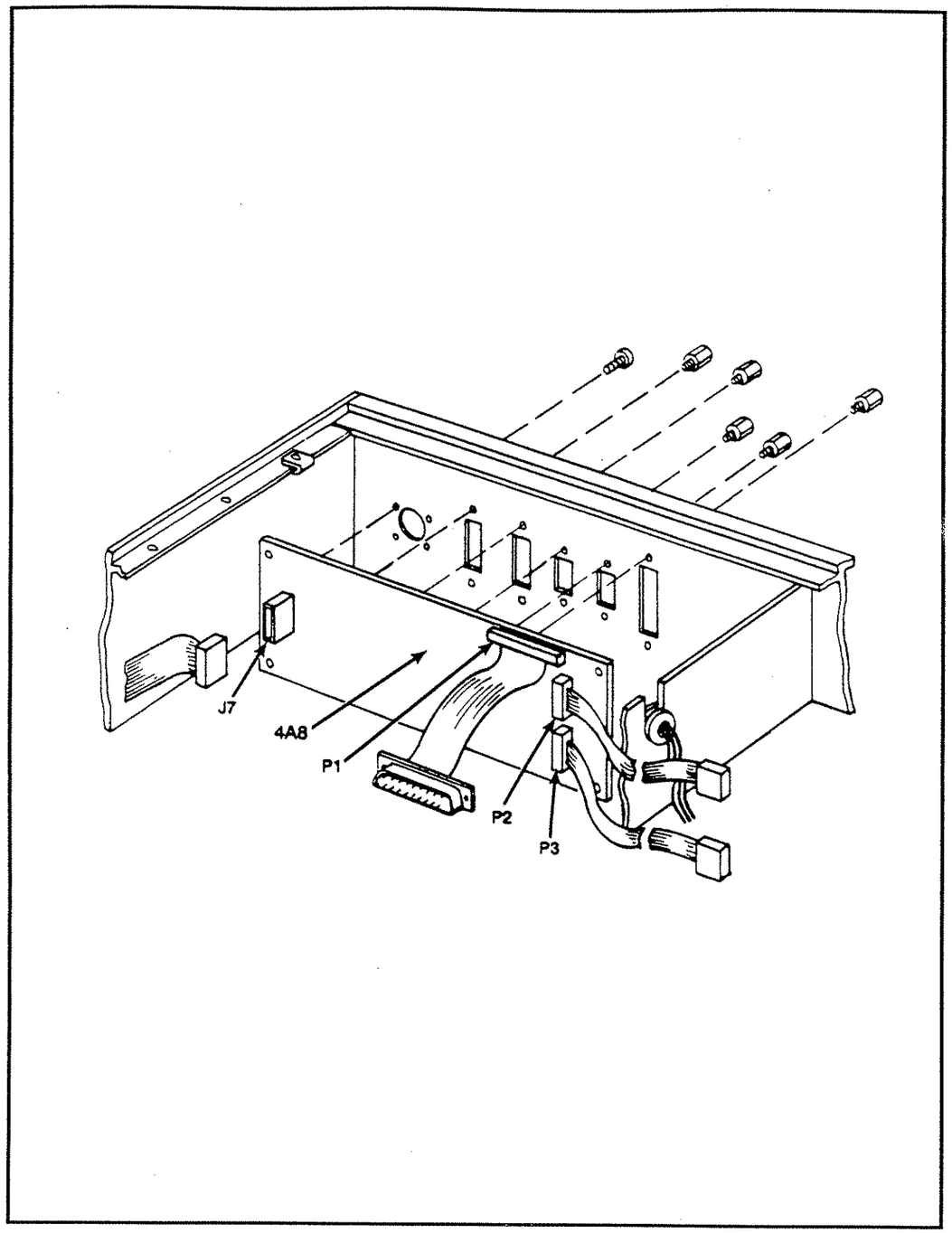

Figure 5.4.10 Removal/Installation of Audio Selector Board 4A8.

5.5 POWER SUPPLY 4A9 FAULT ISOLATION GUIDE

NOTE: Refer to Figure 5.5.1 for LED indicators, Figure 5.4.6 for location, Figure 5.4.7 for Power Supply removal, Figures 5.7.4 thru 5.7.6 for schematics and repair parts list.

POWER SUPPLY 4A9 FAULT ISOLATION GUIDE

LED's X=ON BLANK=OFF	AC/DC POWER APPLIED								POSSIBLE TROUBLE	CORRECTIVE ACTION
	READY	FAULT	INPUT		5 V		12 V			
			OVER	UNDER	OVER	UNDER	OVER	UNDER		
1	X								No trouble, normal indication.	No action required.
2									1. No AC input power. 2. Open AC fuses 4A F1 and F2.	1. Check AC input. 2. Replace as required. If fuses open again, use standard troubleshooting techniques and repair or replace 4A9 power supply.
3									1. No DC input power. 2. Open 4A9 F1.	1. Check DC input. 2. Replace as required. If fuses open again, use standard troubleshooting techniques and repair or replace 4A9 power supply.
4		X		X					Input voltage below 10 VDC at 4A9 J4 pin 1 for AC input or J1 pin 3 for DC input.	Use standard Troubleshooting techniques to correct input voltage.
5		X	X						Input voltage above 33 VDC at 4A9J4 pin 1 for AC input or 4A9J1 pin 3 for DC input.	Use standard Troubleshooting techniques to correct input voltage.

(Page 1 of 3)

LED's X=ON BLANK=OFF	AC/DC POWER APPLIED								POSSIBLE TROUBLE	CORRECTIVE ACTION
	READY	FAULT	INPUT		5 V		12 V			
			OVER	UNDER	OVER	UNDER	OVER	UNDER		
6		X				X		X	1. Failure in U3/U4 or associated circuitry. 2. Short on the 5 VDC line in modem.	Remove P3 from 4A9J3. If GREEN READY LED comes ON, there is a short on the 5 VDC line in modem. Use standard troubleshooting techniques to repair. If symptom was not corrected with P3 removed, troubleshoot U3/U4 and associated circuitry. Repair or replace as required or remove and replace 4A9 assembly.
7		X			X				Failure in U3/U4 or associated circuitry.	Troubleshoot U3/U4 and associated circuitry. Repair or replace as required or remove and replace 4A9 assembly.
8		X						X	1. Failure in U5/U8 or associated circuitry. 2. Short on +12 or -12 VDC lines in modem.	Remove P3 from 4A9J3. If GREEN READY LED comes ON, there is a short on the +12 or -12 VDC line in modem. Use standard

LED's X=ON BLANK=OFF	AC/DC POWER APPLIED								POSSIBLE TROUBLE	CORRECTIVE ACTION
	READY	FAULT	INPUT		5 V		12 V			
			OVER	UNDER	OVER	UNDER	OVER	UNDER		
										troubleshooting techniques to repair. If symptom was not corrected with P3 removed, troubleshoot U5/U8 and associated circuitry. Repair or replace as required or remove and replace 4A9 assembly.
9		X					X		Failure in U5/U8 or associated circuitry.	Troubleshoot U5/U8 and associated circuitry. Repair or replace as required or remove and replace 4A9 assembly.

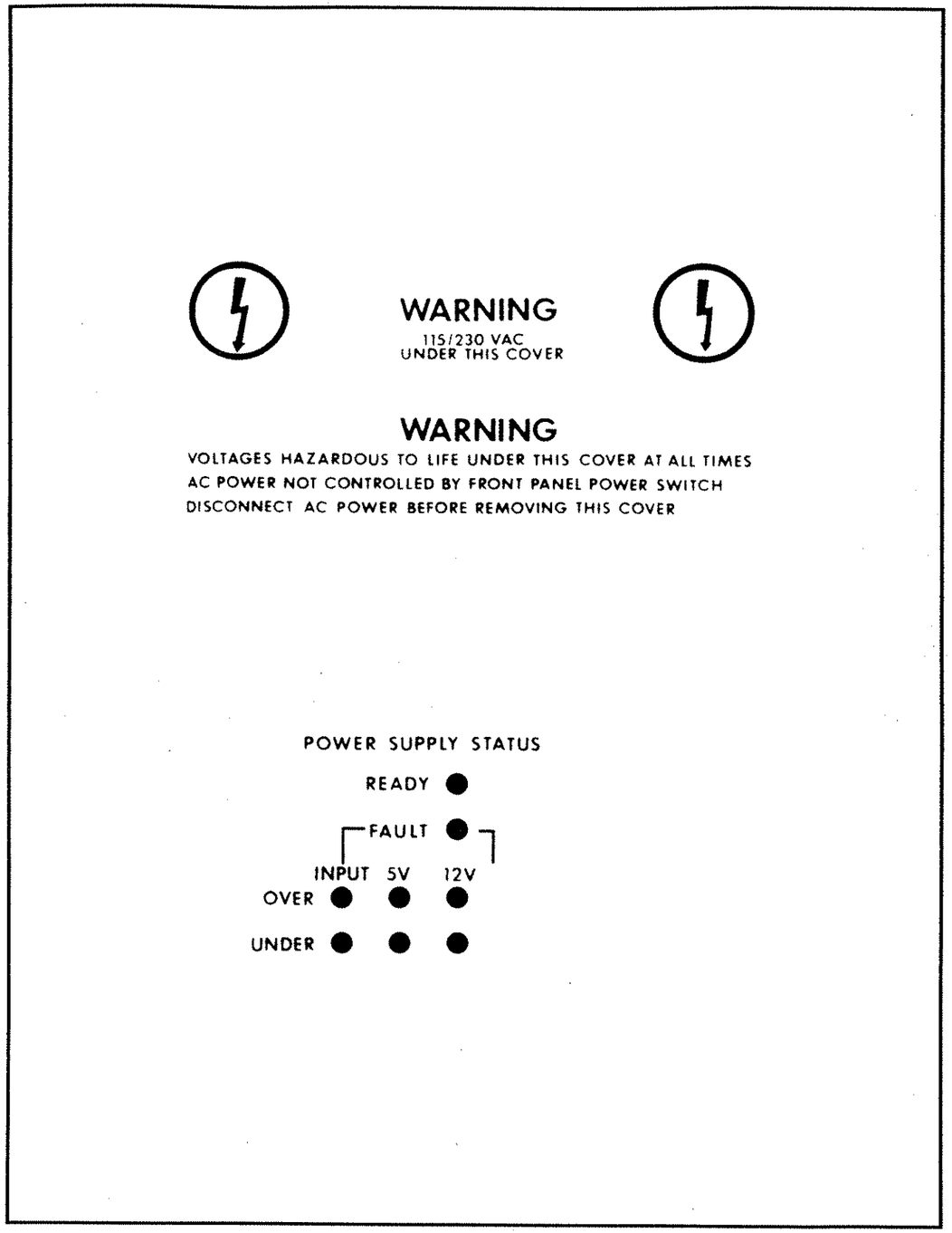

Figure 5.5.1 Top View of MD-9188A Power Supply (4A9) Fault Indicators.

5.6 PREVENTIVE MAINTENANCE

The air filter, 4AMP1, should be replaced every six months.

First, remove the four screws securing the filter screen to the front panel (see Figure 5.4.6). Then, replace the air filter and re-install the filter screen use the four screws.

5.7 SCHEMATICS and PARTS LISTS

The following pages contain schematics and parts lists for the MD-9188A, see table 5.7 below:

DESIGNATOR		DESCRIPTION	SUNAIR PART NUMBER
ASSEMBLY	SUBASSEMBLY		
4A		CHASSIS	81010100XX
	4A1	CPU MOTHER BOARD ASSY	8101030093
	4A2	BUS EXTENDER BOARD	8101080091
	4A3	ROM DISK BOARD ASSY	8101050094
	4A4	MULTIFUNCTION BOARD ASSY	8101060090
	4A5	DIGITAL SIGNAL PROCESSOR ASSY	8101045007
	4A7	AUDIO/DISPLAY ASSEMBLY	8101070095
	4A8	AUDIO SELECTOR ASSEMBLY	8101090096
	4A9	AC/DC POWER SUPPLY ASSY	8101025090
	4A9A1	AC/DC POWER SUPPLY CONTROL ASSY	8101028099

Table 5.7 MD-9188A Table of Assemblies.

Note: 4A6 is not used.

FINAL TESTED MD-9188A

	FINAL TESTED MD-9188A	81010012XX
4A	CHASSIS ASSY, ALE MODEM	81010100XX
4A2	PC ASSY, BUS EXTENDER	8101080091
4A3	ROM DISK BOARD ASSY, ALE	8101050094
4A4	MULTIFUNCTION BOARD ASSY, ALE	8101060090
4A5	DSP 32C/AD-DA BOARD ASSY	8101040005
	BRACKET, DSP ASSY	8101010408
	BRACKET, ROM DISK ASSY, REAR	8101010505
	BRACKET, CLAMP, PC BOARD	8101016708
	COVER, TOP	8101012401
	COVER, POWER SUPPLY	8101020802
	PAD, SPG. NEOPRENE 4X1.25X1/4	1001040031
	SCREW, FH 6-32X3/8LG.	0522350062

CHASSIS ASSEMBLY 4A

	CHASSIS ASSEMBLY 4A	81010100XX
4A1	MOTHER BOARD ASSY, ALE MODEM	8101030093
4A7	PC ASSY, AUDIO/DISPLAY	8101070095
4A8	PC ASSY, AUDIO SELECTOR	8101090096
4A9	PC ASSY, AC/DC POWER SUPPLY	8101025090
4A9A1	PC ASSY, AC/DC PS CONTROL	8101028099
	BOOT, TOGGLE SWITCH 15/32-32	0346450004
	BRACKET, LEFT SIDE	8101013806
	BRACKET, RIGHT SIDE	8101013407
	BRACKET, PS PARTITION	8101021400
	CABLE, FLAT, 20 COND. 28AWG	1008080004
	CLAMP, CABLE, FLAT 1 1/16 WIDE	1008650005
	CONNECTOR, RIBBON, 20 PIN FEM	1008120031
	CONNECTOR, POWER, 5 PIN ROUND	1010510029
	CONNECTOR, POWER, 2 PIN ROUND	1010510037
	CONNECTOR, HOUSING, 6PIN, FEM	1010840011
	CONNECTOR, HOUSING, 10 PIN,FEM	1010850016
	CONNECTOR, HOUSING, 6 PIN FEM	1010900030
	CONNECTOR, HOUSING, 4 PIN FEM	1010920031
CR1	DIODE, BRIDGE MDA2504	1010630024
	FAN, DC, 12V, 30CFM	1010870033
	FERRULE, 5/16 HANDEL, BLK	1012360032
	FILTER SCREEN, 3.2 IN FAN	1010890034
	FILTER, AIR	8066002301
	FINGER GUARD, 3.2 IN FAN	1010880039
	FUSE, MDL, 1/2 AMP, 250V	0841310009
	FUSEHOLDER, PANEL MOUNT	0849030005
	GROMMET, RUBBER .500 ID .812 OD	0500580006
	HANDLE, ROUND 5/16D, 2.25 LG. BLK	1012350037
	JACK SOCKET KIT, D SUB	1011140012
	LAMP ASSY. GREEN	0841480001
	LAMP ASSY. RED	0841490007
	LAMP ASSY. AMBER	0841500002
	NAMEPLATE MD-9188A	8101014900
	PANEL, RH SIDE	81010134XX
	PANEL, LH SIDE	81010138XX
	PANEL, FRONT	81010141XX
	PANEL, REAR	8101015108
	PLATE	8101010807
	SOCKET, CARTRIDGE LAMP	1003322000
	SWITCH, TOGGLE, DPST	0346430003
	TRANSFORMER, AC, 16VCT, 56W	1010670034
ZS1/ZS2	VARISTOR, MOV V140LA5	1011300010

AUDIO/DISPLAY ASSEMBLY 4A7

	AUDIO/DISPLAY ASSEMBLY 4A7	8101070095
C1	CAP. 1μF, 35V, 196D	0281660000
C2	CAP. 1μF, 35V, 196D	0281660000
C3	CAP. 22μF, 15V, T368	0296660001
C4	CAP. 47μF, 35V	0282190007
C5	CAP. 820PF, 300V, DM 15, 5%	0288750004
C6	CAP. 15μF, 35V	0282240004
C7	CAP. 33μF, 10V, 198D	0281530009
C8	CAP. .01μF, 50V, X7R 20%	0281730008
C9	CAP. .01μF, 50V, X7R 20%	0281730008
C10	CAP. .01μF, 50V, X7R 20%	0281730008
C11	CAP. .01μF, 50V, X7R 20%	0281730008
C12	CAP. .01μF, 50V, X7R 20%	0281730008
C13	CAP. .01μF, 50V, X7R 20%	0281730008
C14	CAP. .01μF, 50V, X7R 20%	0281730008
C15	CAP. .01μF, 50V, X7R 20%	0281730008
C16	CAP. .01μF, 50V, X7R 20%	0281730008
C17	CAP. 0.1μF, 50V, X7R	1011180014
C18	CAP. 0.1μF, 50V, X7R	1011180014
C19	CAP. 0.1μF, 50V, X7R	1011180014
C20	CAP. .01μF, 50V, X7R, 20%	0281730008
C21	CAP. .01μF, 50V, X7R, 20%	0281730008
CR1	DIODE, RECTIFIER 1N4004	0405180004
L1	INDUCTOR, MOLDED, 33μH	0646300008
L2	INDUCTOR, MOLDED, 33μH	0646300008
P1	CONNECTOR, HEADER, 20 PIN MALE	1011210207
P2	CONNECTOR, 4 PIN, DISK DRIVE	1011310015
Q1	TRANSISTOR, N-CH, FET 2N7000	1011050013
Q2	TRANSISTOR, N-CH, FET 2N7000	1011050013
Q3	TRANSISTOR, N-CH, FET 2N7000	1011050013
Q4	TRANSISTOR, N-CH, FET 2N7000	1011050013
R1	RESISTOR, 100, 5%, 1/8W	1010801015
R2	RESISTOR, 10, 5%, 1/4W	1077160004
R3	RESISTOR, 10K, 5%, 1/8W	1010801031
R4	RESISTOR, 10K, 5%, 1/8W	1010801031
R5	RESISTOR, 10K, 5%, 1/8W	1010801031
R6	RESISTOR, 10K, 5%, 1/8W	1010801031
R7	RESISTOR, 22, 5%, 1/8W	1010802208
R8	RESISTOR, 39K, 5%, 1/8W	1010803930
R9	RESISTOR, 56K, 5%, 1/8W	1010805631
R10	POT., 500,10%, 1/2W, 4 TURNS	0197510019
R11	RESISTOR, 47K, 5%, 1/8W	1010804731
R12	RESISTOR, 22K, 5%, 1/8W	1010802232
R13	RESISTOR, 22K, 5%, 1/8W	1010802232
R14	RESISTOR, 22K, 5%, 1/8W	1010802232
R15	RESISTOR, 22K, 5%, 1/8W	1010802232
R16	RESISTOR, 22K, 5%, 1/8W	1010802232
R17	RESISTOR, 10K, 5%, 1/8W	1010801031
T1	TRANSFORMER, AUDIO, PC MOUNT	0491650001
T2	TRANSFORMER, AUDIO, PC MOUNT	0491650001
U1	IC. LINEAR 5532	1006270019
U2	IC. DIGITAL 4584B	1005190011
U3	IC. DIGITAL MC14013B	1005150028
U4	IC. DIGITAL 74LS244	1005460027

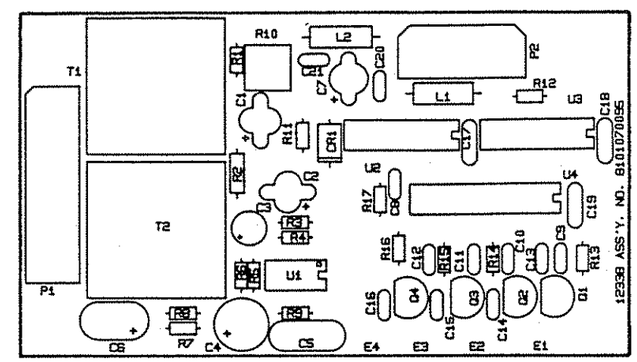

Figure 5.7.1 Audio/Display Assembly 4A7, page 1 of 2.

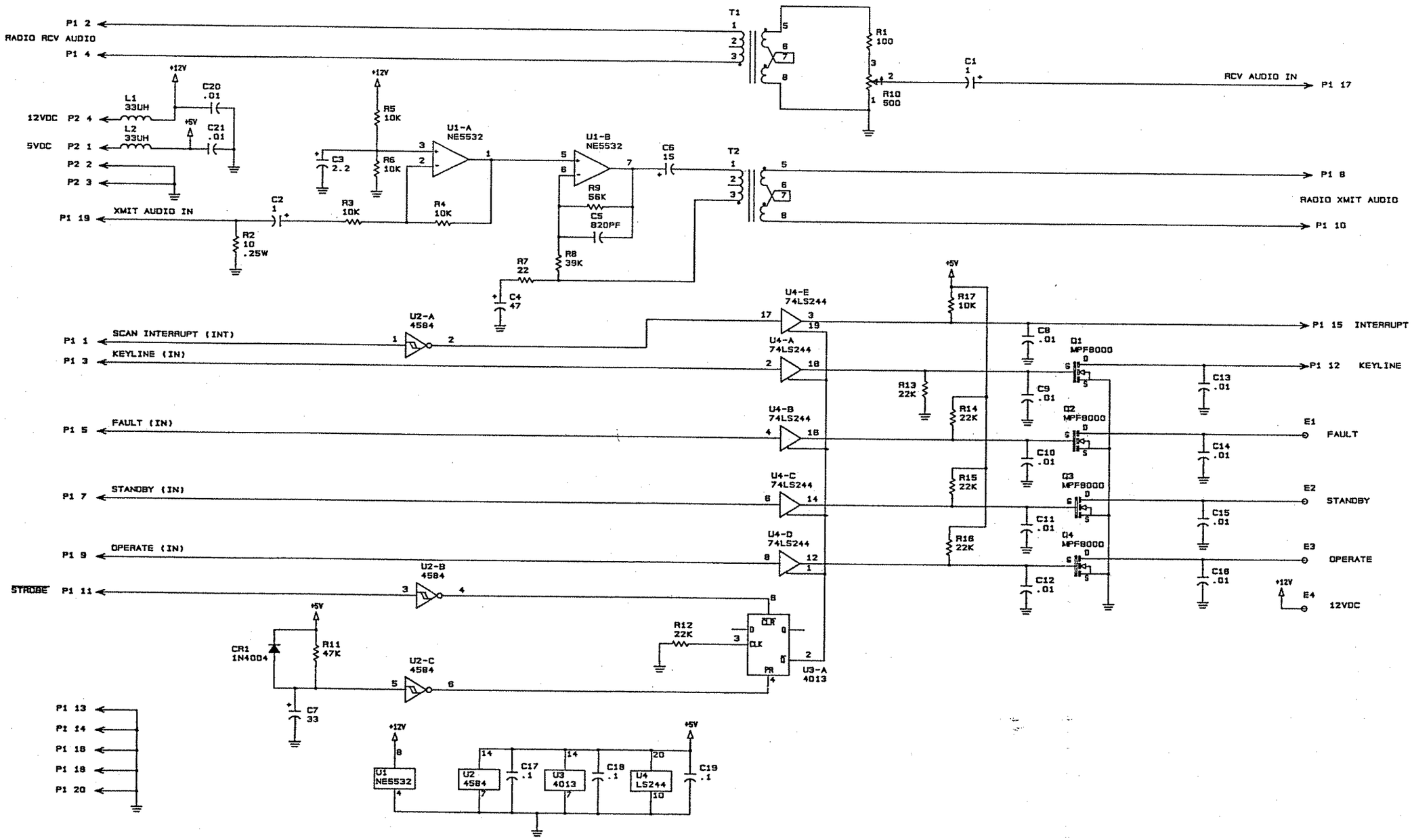

Figure 5.7.1 Audio/Display Assembly 4A7, page 2 of 2.

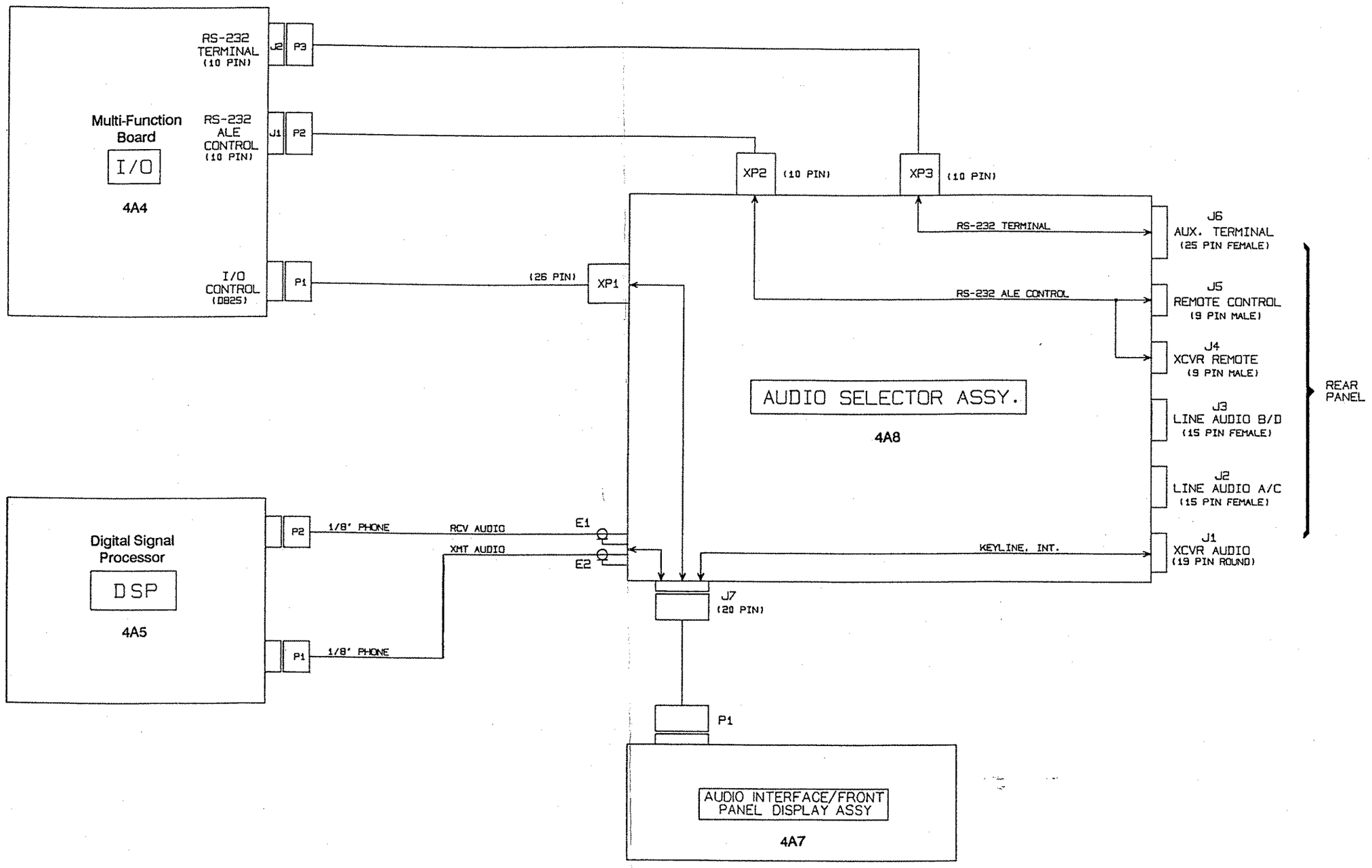

Figure 5.7.2 Audio Selector Interconnect Cable Diagram, page 1 of 1.

AUDIO SELECTOR ASSEMBLY 4A8

	AUDIO SELECTOR ASSEMBLY 4A8	8101090096
C1	CAP. 22µF, 15V, 196D	0281690006
C2	CAP. 1µF, 35V, 196D	0281660000
C3	CAP. 1µF, 35V, 196D	0281660000
C4	CAP. 22µF, 15V, 196D	0281690006
C5	CAP. 22µF, 15V, 196D	0281690006
C6	CAP. 22µF, 15V, 196D	0281690006
C7	CAP. 22µF, 15V, 196D	0281690006
C8	CAP. .01µF, 50V, X7R 20%	0281730008
C9	CAP. 6.8µF, 20V, T368	0296780006
C10	CAP. 1µF, 35V, 196D	0281660000
C11	CAP. 1µF, 35V, 196D	0281660000
C12	CAP. 0.1µF, 50V, X7R	1011180014
C13	CAP. 0.1µF, 50V, X7R	1011180014
C14	CAP. 0.1µF, 50V, X7R	1011180014
C15	CAP. 0.1µF, 50V, X7R	1011180014
C16	CAP. 0.1µF, 50V, X7R	1011180014
C17	CAP. 1µF, 35V, 196D	0281660000
CR1	DIODE, RECTIFIER 1N4004	0405180004
CR2	DIODE, RECTIFIER 1N4004	0405180004
CR3	DIODE, RECTIFIER 1N4004	0405180004
CR4	DIODE, RECTIFIER 1N4004	0405180004
CR5	DIODE, RECTIFIER 1N4004	0405180004
CR6	DIODE, RECTIFIER 1N4004	0405180004
CR7	DIODE, RECTIFIER 1N4004	0405180004
DS1	DIODE, LED, AMBER PC MOUNT	1011480000
DS2	DIODE, LED, AMBER PC MOUNT	1011480000
DS3	DIODE, LED, AMBER PC MOUNT	1011480000
DS4	DIODE, LED, AMBER PC MOUNT	1011480000
J1	CONNECTOR, POWER, 19 PIN, FEM	1011110008
J2	CONNECTOR, POWER, 15 PIN, FEM	1010780034
J3	CONNECTOR, POWER, 15 PIN, FEM	1010780034
J4	CONNECTOR, POWER, 9 PIN, MALE	1010790030
J5	CONNECTOR, POWER, 9 PIN, MALE	1010790030
J6	CONNECTOR, POWER, 25 PIN, MALE	1010800035
J7	CONNECTOR, HEADER, 20 PIN MALE	1011210207
K1	RELAY, DPDT, 12 VDC	1005090009
K2	RELAY, DPDT, 12 VDC	1005090009
K3	RELAY, DPDT, 12 VDC	1005090009
K4	RELAY, DPDT, 12 VDC	1005090009
K5	RELAY, DPDT, 12 VDC	1005090009
K6	RELAY, DPDT, 12 VDC	1005090009
K7	RELAY, DPDT, 12 VDC	1005090009
P1	CONNECTOR, POWER, 25 PIN, MALE	1010810031
P2	CONNECTOR, RIBBON, 10 PIN FEM	1008070017
P3	CONNECTOR, RIBBON, 10 PIN FEM	1008070017
Q1	TRANSISTOR, N-CH, FET 2N7000	1011050013
R1	RESISTOR, 604, 1%, 1/8W	0193980002
R2	RESISTOR, 1K, 5%, 1/8W	1010801023
R3	RESISTOR, 1K, 5%, 1/8W	1010801023
R4	RESISTOR, 10K, 5%, 1/8W	1010801031
R5	RESISTOR, 10K, 5%, 1/8W	1010801031
R6	POT. 10K, 10%, 3/4W 15 TURNS	0338490043
R7	RESISTOR, 10K, 5%, 1/8W	1010801031
R8	RESISTOR, 10K, 5%, 1/8W	1010801031
R9	RESISTOR, 2.2K, 5%, 1/8W	1010802224
R10	RESISTOR, 22, 5%, 1/8W	1010802208
R11	RESISTOR, 47K, 5%, 1/8W	1010804731
R12	RESISTOR, 22, 5%, 1/8W	1010802208
R13	RESISTOR, 2.2K, 5%, 1/8W	1010802224
R14	RESISTOR, 47K, 5%, 1/8W	1010804731
R15	RESISTOR, 68K, 5%, 1/8W	1010806831
R16	RESISTOR, 47K, 5%, 1/8W	1010804731
R17	RESISTOR, 820, 10%, 1/4W	0178210005
R18	RESISTOR, 820, 10%, 1/4W	0178210005
R19	RESISTOR, 820, 10%, 1/4W	0178210005
R20	RESISTOR, 820, 10%, 1/4W	0178210005
R21	RESISTOR, 47K, 5%, 1/8W	1010804731
R22	RESISTOR, 47K, 5%, 1/8W	1010804731
R23	RESISTOR, 22K, 5%, 1/8W	1010802232
R24	RESISTOR, 2.7K, 5%, 1/8W	1010802721
T1	TRANSFORMER, AUDIO, PC MOUNT	0491650001
U1	IC. DIGITAL 4017B	1006260013
U2	IC. DIGITAL 4584B	1005190011
U3	IC. DIGITAL 4071B	1005160023
U4	IC. DIGITAL ULN 2003A	1005630038
U5	IC. LINEAR 5532	1006270019
U6	IC. LINEAR 5532	1006270019
U7	IC. LINEAR UA78L05 AWC	1010150014
XP1	CONNECTOR, PCB, TRANSITION, 26 PIN	1011090261
XP2	CONNECTOR, PCB, TRANSITION, 10 PIN	1011090104
XP3	CONNECTOR, PCB, TRANSITION, 10 PIN	1011090104
	CABLE, FLAT, 26 COND. 28AWG	1011180006
	CABLE, RIBBON, 10 CONDUCTOR	1008340014
	KEY, POLARIZING	1008070033
	PHONO PLUG, 2 COND, SHIELDED	1012370038

Figure 5.7.3 Audio Selector Assembly 4A8, page 1 of 4.

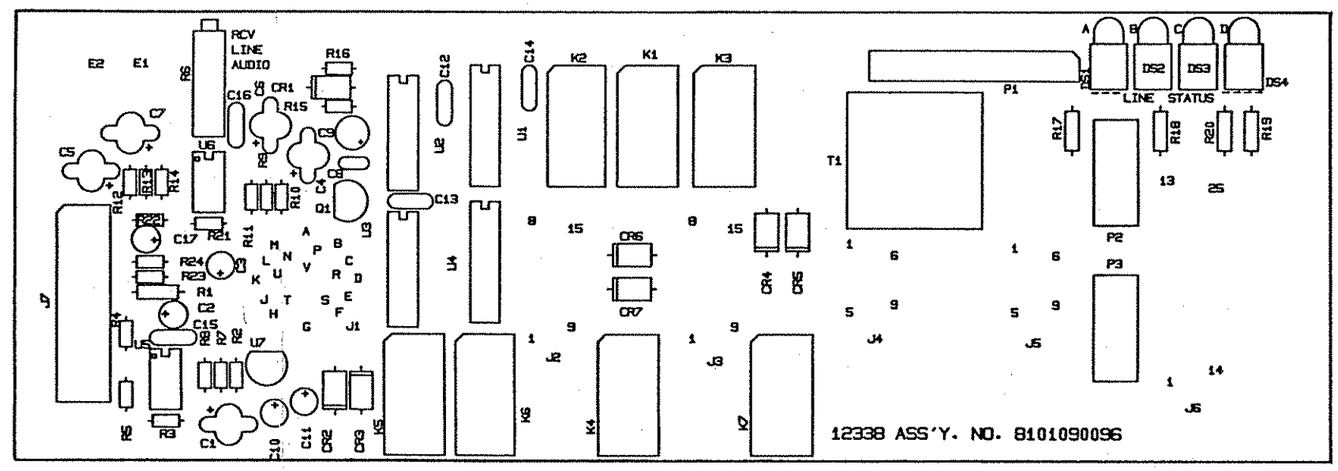

Figure 5.7.3 Audio Selector Assembly 4A8, page 2 of 4.

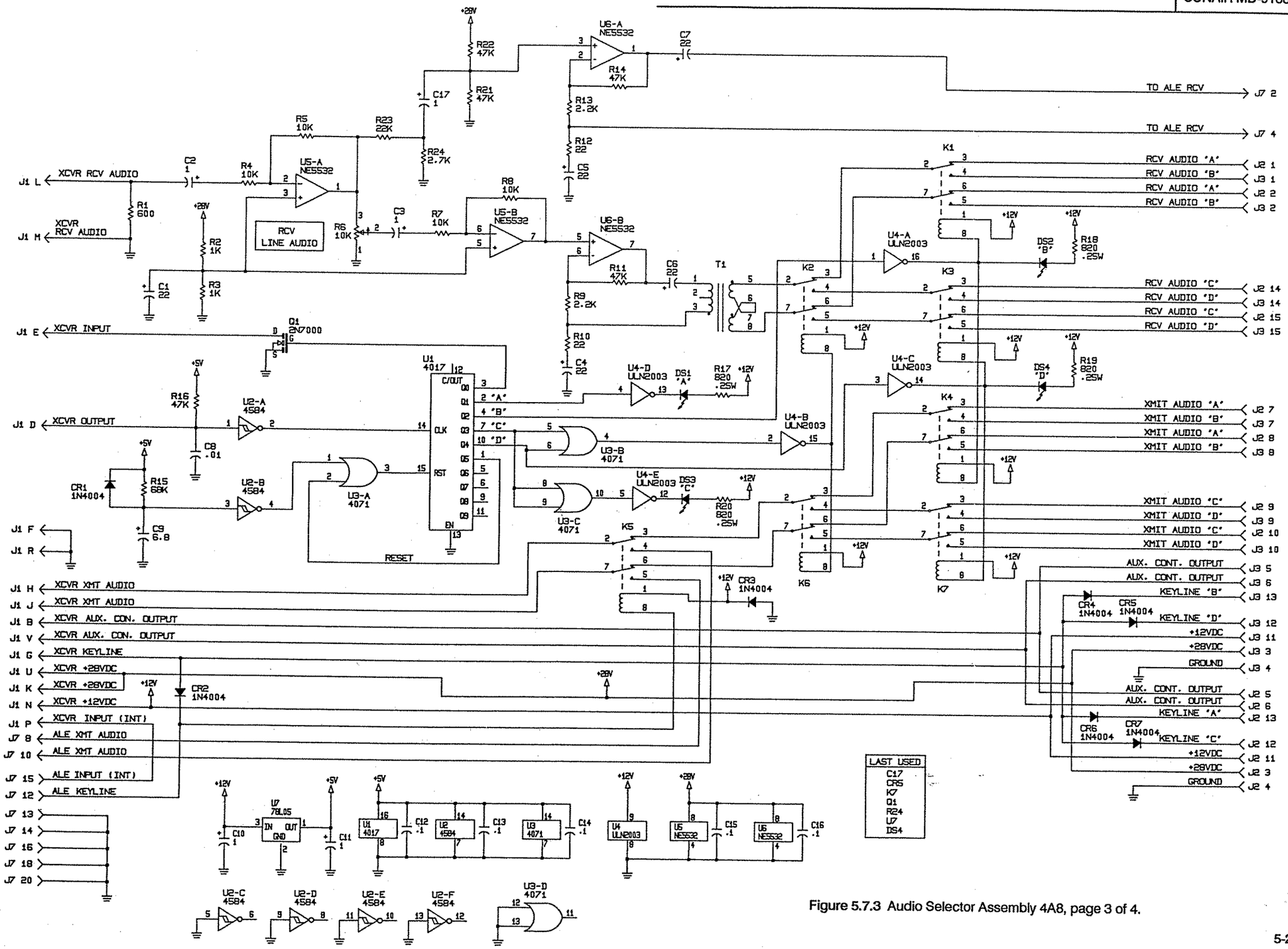

Figure 5.7.3 Audio Selector Assembly 4A8, page 3 of 4.

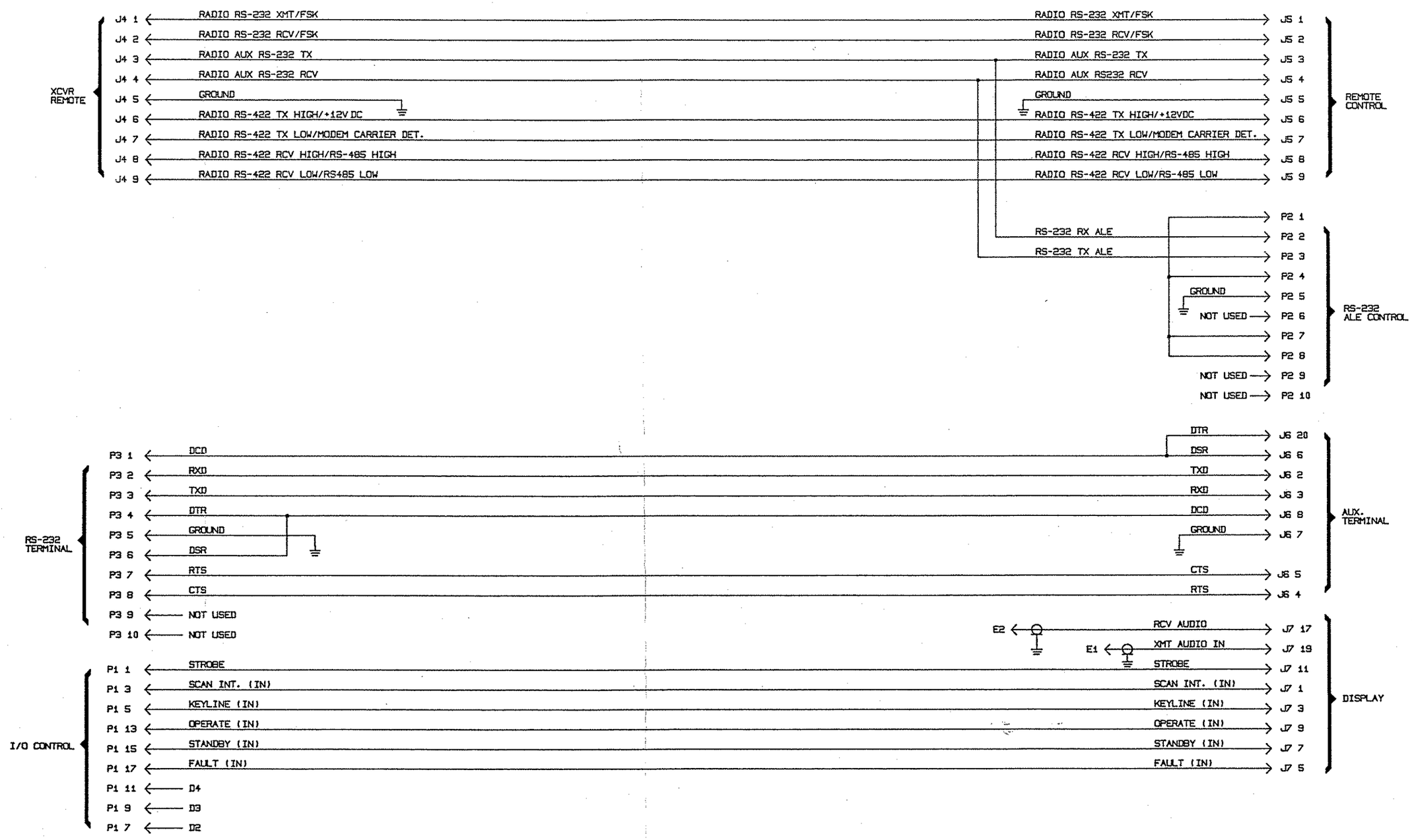

Figure 5.7.3 Audio Selector Assembly 4A8, page 4 of 4.

CONNECTOR P/N 1010520 24

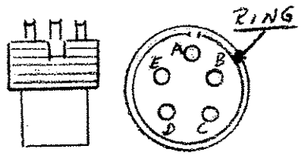

1. HOLD CONNECTOR TIGHT, WHILE REMOVING TAPE.

2. LINE UP NOTCH/SLOT WITH BOTTOM OF CONNECTOR. DROP IN PLACE.

3. SLIP ON RING.

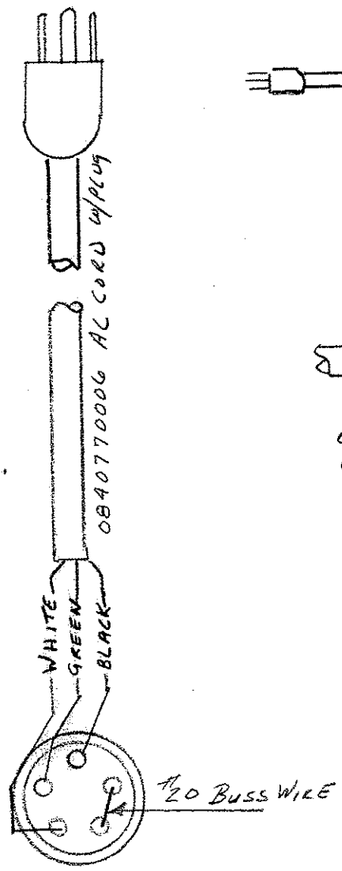

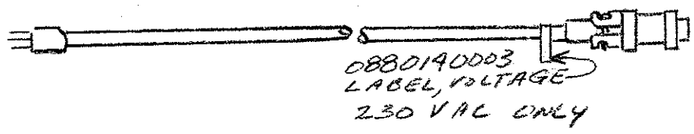

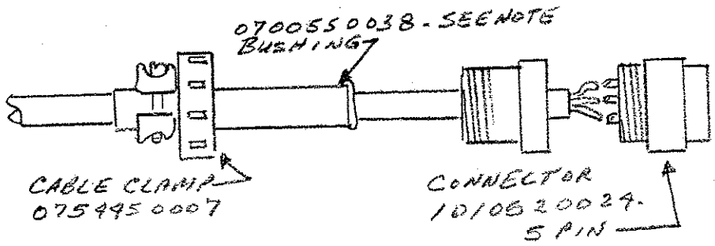

CORD PREP

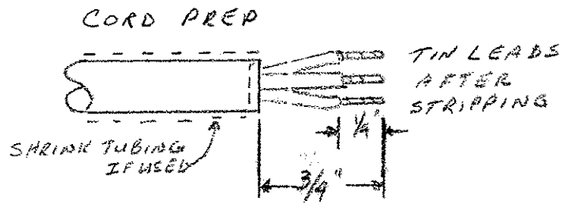

NOTE: IF CABLE IS TOO LARGE O.D. TO ACCEPT BUSHING, USE A 2 1/2" LONG PIECE OF 1/2" DIA SHRINK #0600530009

Title POWER CORD AC 230V, ALE MODEM-MD-9188		Drawing No. 810100 2197	Rev (B/M) A
I.E. JJB	P.E.	C.E.	Date
Pg. 1 of 1		Rev. Date 10-5-00	

ECN	Rv
5699	H
3529	1

SUNAIR electronics inc.

Drawn By:

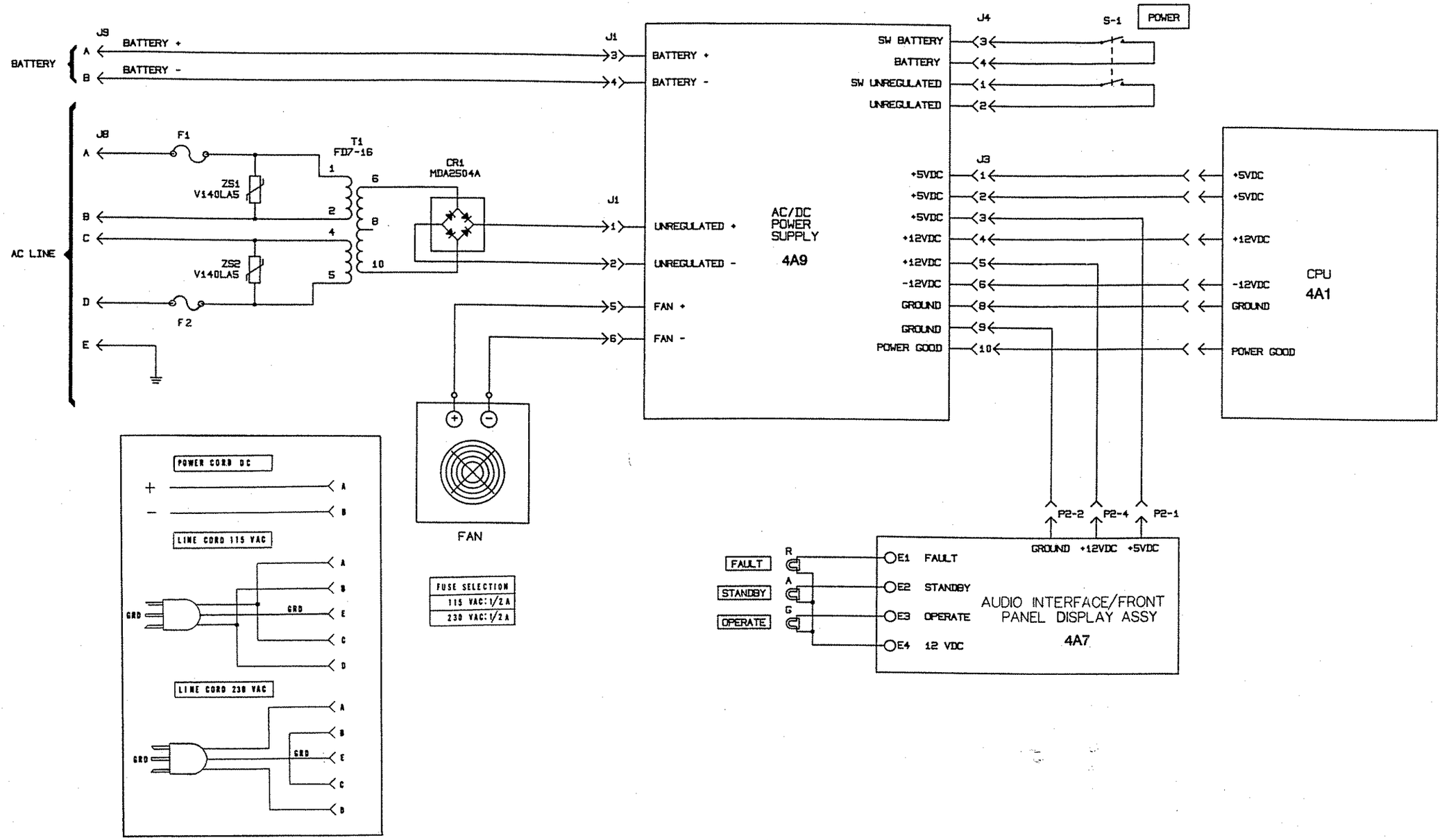

Figure 5.7.4 AC/DC Power Supply Chassis and Interconnect, page 1 of 1.

AC/DC POWER SUPPLY ASSY 4A9

	AC/DC POWER SUPPLY ASSY 4A9	8101025090
C1	CAP. 6.8µF, 50V, T350	1008980013
C2	CAP. .47µF, 50V, X7R 20%	0283377771
C3	CAP. 6800 µF, 63V, 20%, 105C	1010800019
C4	CAP. 6800 µF, 63V, 20%, 105C	1010800019
C5	CAP. 6800 µF, 63V, 20%, 105C	1010800019
C6	CAP. 3.3µF, 35V, 196D	0281680001
C7	CAP. .01µF, 50V, X7R 20%	0281730008
C8	CAP. 6.8µF, 50V, T350	1008980013
C9	CAP. 6.8µF, 50V, T350	1008980013
C10	CAP. .01µF, 50V, X7R 20%	0281730008
C11	CAP. .47µF, 50V, X7R 20%	0283377771
C13	CAP. 1000µF, 63V, 20%, 105C	1011350009
C14	CAP. 6.8µF, 50V, T350	1008980013
C15	CAP. 1000µF, 63V, 20%, 105C	1011350009
C16	CAP. 1000µF, 63V, 20%, 105C	1011350009
C17	CAP. .01µF, 50V, X7R 20%	0281730008
C18	CAP. .47µF, 50V, X7R 20%	0283377771
C19	CAPACITOR 0.1µF, 50V, X7R	1011180014
C20	CAP. .01µF, 50V, X7R 20%	0281730008
C21	CAP. .47µF, 50V, X7R 20%	0283377771
C23	CAP. 1000µF, 63V, 20%, 105C	1011350009
C24	CAP. 6.8µF, 50V, T350	1008980013
C25	CAP. 1000µF, 63V, 20%, 105C	1011350009
C26	CAP. 1000µF, 63V, 20%, 105C	1011350009
C27	CAP. .01µF, 50V, X7R 20%	0281730008
C28	CAP. .47µF, 50V, X7R 20%	0283377771
C29	CAP. .47µF, 50V, X7R 20%	0283377771
C30	CAP. 1000µF, 63V, 20%, 105C	1011350009
C31	CAP. 1000µF, 63V, 20%, 105C	1011350009
C32	CAP. 6.8µF, 50V, T350	1008980013
C33	CAP. .47µF, 50V, X7R 20%	0283377771
C34	CAP. 1000µF, 63V, 20%, 105C	1011350009
C35	CAP. 1000µF, 63V, 20%, 105C	1011350009
C36	CAP. 1000µF, 63V, 20%, 105C	1011350009
C37	CAP. .01µF, 50V, X7R 20%	0281730008
C38	CAP. .47µF, 50V, X7R 20%	0283377771
C39	CAP. 1000µF, 63V, 20%, 105C	1011350009
C40	CAP. .01µF, 50V, X7R 20%	0281730008
C41	CAP. .47µF, 50V, X7R 20%	0283377771
C42	CAPACITOR 0.1µF, 50V, X7R	1011180014
C43	CAPACITOR 0.1µF, 50V, X7R	1011180014
C44	CAPACITOR 0.1µF, 50V, X7R	1011180014
C45	CAP. 6.8µF, 50V, T350	1008980013
C46	CAP. .01µF, 50V, X7R 20%	0281730008
C47	CAP. 6.8µF, 50V, T350	1008980013
CR1	DIODE, RECTIFIER MR-820	0405620004
CR2	DIODE, RECTIFIER 1N4004	0405180004
CR3	DIODE, RECTIFIER 1N4004	0405180004
CR4	DIODE, RECTIFIER 1N4004	0405180004
CR5	DIODE, RECTIFIER 1N5822	1010630032
CR6	DIODE, RECTIFIER 1N5822	1010630032
CR7	DIODE, RECTIFIER 1N5822	1010630032
CR8	DIODE, RECTIFIER 1N5822	1010630032
CR9	DIODE, RECTIFIER 1N4004	0405180004
CR10	DIODE, TRANSZORB 1N6423A	1011260000
CR11	DIODE, RECTIFIER MR-820	0405620004
CR12	DIODE, TRANSIENT SUPR.TVS505	1010720007
CR13	DIODE, RECTIFIER 1N4004	0405180004
CR14	DIODE, RECTIFIER 1N4004	0405180004
F1	FUSE, AGC, 5 AMP, 32V	0848980000
J1	CONNECTOR, PC, 6 PIN HEADER	1010830015
J2	CONNECTOR, HEADER 14 PIN MALE	1011200147
J3	CONNECTOR, PC, 10 PIN HEADER	1010680030
J4	CONNECTOR, PC, 6 PIN HEADER	1010830015
J5	CONNECTOR, 4PIN, DISK DRIVE	1011310015
K1	RELAY, SPDT, 24VDC, 10 AMP	1008290009
L1	FERRITE BEAD, .400L	1010900013
L2	INDUCTOR, TOROID, 150 µH	1010650033
L3	FERRITE BEAD, .400L	1010900013
L4	FERRITE BEAD, .400L	1010900013
L5	INDUCTOR, TOROID, 150 µH	1010650033
L6	FERRITE BEAD, .400L	1010900013
L7	FERRITE BEAD, .400L	1010900013
L8	CHOKE, POWER, 300 µH	8101024701
L9	CHOKE, POWER, 300 µH	8101024701
L10	CHOKE, POWER, 300 µH	8101024701
Q1	TRANSISTOR, P-CH FET MTP20P06	1010960008
Q2	DIODE, SCR C106A2	0447070002
Q3	DIODE, SCR C106A2	0447070002
Q4	TRANSISTOR, N-CH, FET 2N7000	1011050013
R3	RESISTOR, 68K, 10%, 1/4W	0173520006
R4	RESISTOR, 0.11, 5%, 2W	0197570003
R5	RESISTOR, 0.11, 5%, 2W	0197570003
R6	RESISTOR, 3320, 1%, 1/8W	1003050000
R7	RESISTOR, 1K, 1%, 1/8W	1011380005
R8	RESISTOR, 1.8K, 10%, 1/4W	0178190004
R9	RESISTOR, 1.2, 10%, 2W	0186290004
R10	RESISTOR, 1K, 10%, 1/4W	0171560001
R11	RESISTOR, 3320, 1%, 1/8W	1003050000
R12	RESISTOR, 1K, 1%, 1/8W	1011380005
R13	RESISTOR, 0.11, 5%, 2W	0197570003
R14	RESISTOR, 2.2K, 5%, 1/4W	0178070009
R15	RESISTOR, 56.2K, 1%, 1/8W	1008910015
R16	RESISTOR, 6040, 1%, 1/8W	1010580019
R17	RESISTOR, 3, 5% 3W	1004600003
R18	RESISTOR, 1K, 10%, 1/4W	0171560001
R19	RESISTOR, 5.6K, 10%, 1/4W	0183060008
R20	RESISTOR, 100K, 10%, 1/4W	0170390004
R21	RESISTOR, 2.2K, 5%, 1/4W	0178070009
R22	RESISTOR, 0.11, 5%, 2W	0197570003
R23	RESISTOR, 470, 5%, 1/4W	0184110009
R24	RESISTOR, 1.2K, 10%, 1/4W	0181860007
R25	RESISTOR, 1.2K, 10%, 1/4W	0181860007
R26	RESISTOR, 56, 10%, 1/2W	0168890003

Figure 5.7.5 AC/DC Power Supply Assembly 4A9, page 1 of 3.

T1	TRANSFORMER, -12V SUPPLY	1010660039
U1	IC. LINEAR LM340T5	0448600005
U2	IC. LINEAR LM340/7812	1003410022
U3	IC. LINEAR LM2576-ADJ	1010610031
U4	IC. LINEAR LM2576-ADJ	1010610031
U5	IC. LINEAR LM2577-ADJ	1010620037
U6	IC. DIGITAL 2501-4	1010630008
U7	IC. DIGITAL 74HC14	1006490027
U8	IC. LINEAR 79M12	1010700031
XF1	FUSECLIP, PC MOUNT	0534610005
	BRACKET, HEATSINK, PS	8101025707
	BRACKET, HEATSINK, POWER FET	8101025901
	KEY, POLARIZING	1008070033
	STANDOFF, F-F, 6-32 2.25OL	1005780005

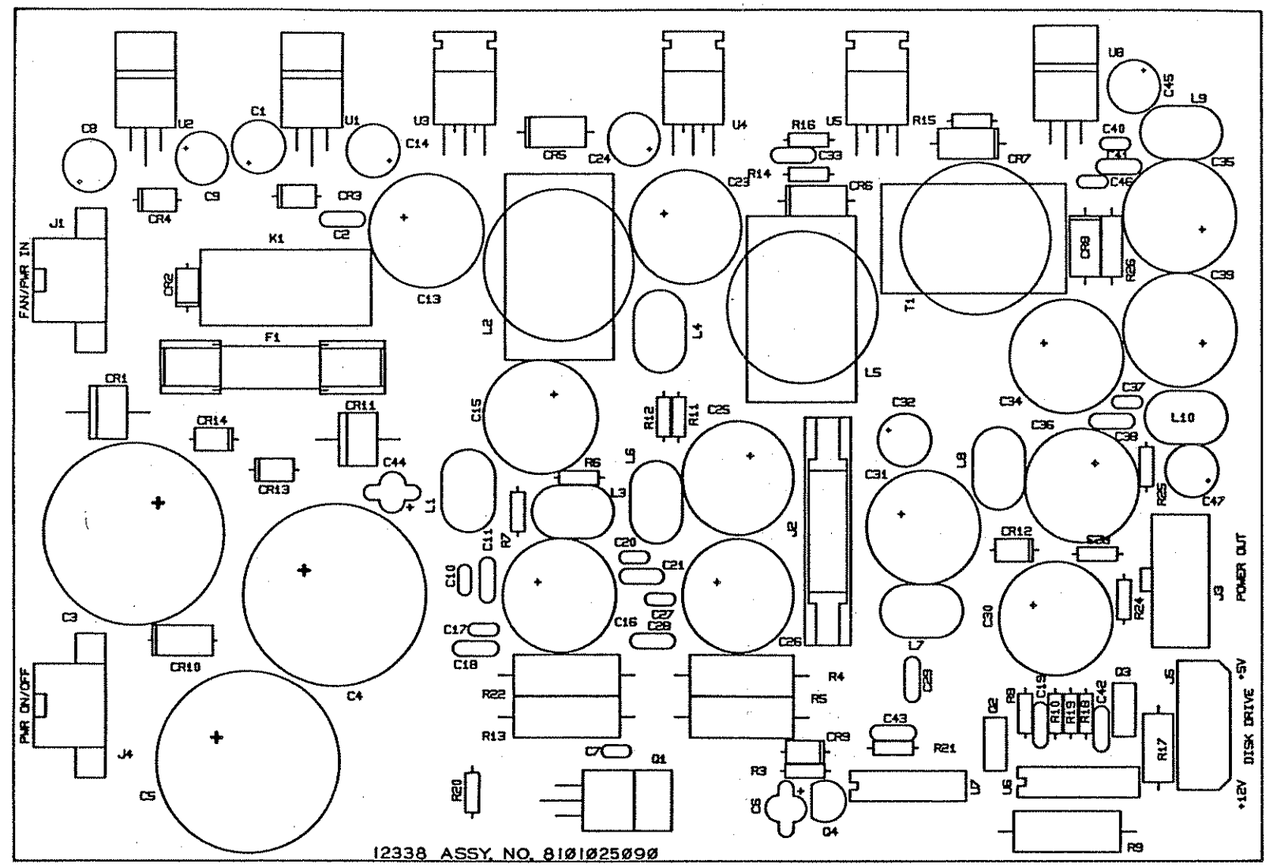

Figure 5.7.5 AC/DC Power Supply Assembly 4A9, page 2 of 3.

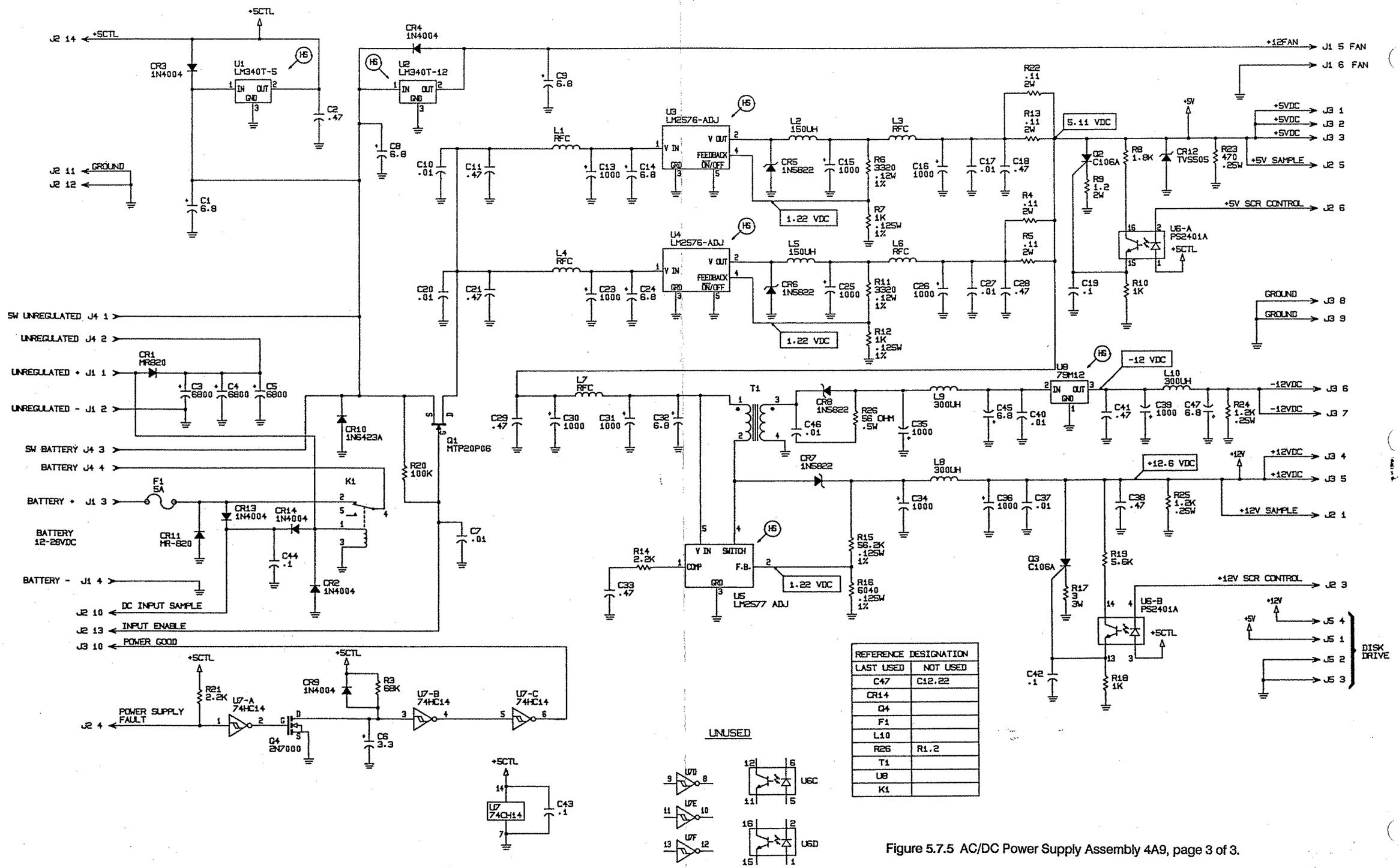

REFERENCE DESIGNATION	
LAST USED	NOT USED
C47	C12,22
CR14	
Q4	
F1	
L10	
R26	R1,2
T1	
U8	
K1	

Figure 5.7.5 AC/DC Power Supply Assembly 4A9, page 3 of 3.

AC/DC POWER SUPPLY CONTROL ASSEMBLY 4A9A1

	AC/DC PWR SUPPLY CTRL ASSY 4A9A1	8101028099
C1	CAP. .01µF, 50V, X7R 20%	0281730008
C2	CAP. .01µF, 50V, X7R 20%	0281730008
C14	CAP. 15µF, 15V, 196D	0281720002
C37	CAP. .01µF, 50V, X7R 20%	0281730008
C38	CAP. .01µF, 50V, X7R 20%	0281730008
C39	CAP. .01µF, 50V, X7R 20%	0281730008
C51	CAP. .01µF, 50V, X7R 20%	0281730008
C53	CAP. .01µF, 50V, X7R 20%	0281730008
C54	CAP. .01µF, 50V, X7R 20%	0281730008
C55	CAP. .01µF, 50V, X7R 20%	0281730008
C57	CAP. 1µF, 35V, 196D	0281660000
CR1	DIODE, RECTIFIER 1N4004	0405180004
CR2	DIODE, LED, RED	1004350023
CR3	DIODE, LED, RED	1004350023
CR4	DIODE, LED, RED	1004350023
CR5	DIODE, LED, RED	1004350023
CR6	DIODE, LED, RED	1004350023
CR7	DIODE, LED, RED	1004350023
CR8	DIODE, LED, GREEN	1004350015
CR11	DIODE, ZENER IN5228B	1004320027
CR18	DIODE, LED, RED	1004350023
P1	CONNECTOR, RIBBON, 14 PIN FEM	1008350001
Q1	TRANSISTOR, N-CH, FET 2N7000	1011050013
R2	RESISTOR, 10K, 10%, 1/4W	0170410005
R4	RESISTOR, 180, 10%, 1/4W	0175220000
R9	RESISTOR, 100K, 1/8W, 1%	1001030036
R10	RESISTOR, 1.8M, 10%, 1/4W	1011300001
R11	RESISTOR, 10K, 1%, 1/8W	1003050026
R12	RESISTOR, 80.6K, 1%, 1/8W	1011290006
R13	RESISTOR, 1.2M, 10%, 1/4W	0174930003
R14	RESISTOR, 10K, 1%, 1/8W	1003050026
R15	RESISTOR, 270, 10%, 1/4W	0178450006
R16	RESISTOR, 390, 10%, 1/4W	0178330001
R17	RESISTOR, 100K, 10%, 1/4W	0170390004
R18	RESISTOR, 180, 10%, 1/4W	0175220000
R20	RESISTOR, 180, 10%, 1/4W	0175220000
R22	RESISTOR, 180, 10%, 1/4W	0175220000
R23	RESISTOR, 47K, 10%, 1/4W	0171060008
R24	RESISTOR, 270, 10%, 1/4W	0178450006
R26	RESISTOR, 680K, 10%, 1/4W	0181480000
R27	RESISTOR, 36.5K, 1%, 1/8W	1004050011
R28	RESISTOR, 10K, 1%, 1/8W	1003050026
R29	RESISTOR, 470K, 10%, 1/4W	0180570005
R30	RESISTOR, 26.1K, 1%, 1/8W	1011280001
R31	RESISTOR, 10K, 1%, 1/8W	1003050026
R35	RESISTOR, 270, 10%, 1/4W	0178450006
R36	RESISTOR, 4.7M, 10 %, 1/4W	1011330008
R37	RESISTOR, 237K, 1%, 1/8W	1011310007
R38	RESISTOR, 10K, 1%, 1/8W	1003050026
R39	RESISTOR, 1.2M, 10%, 1/4W	0174930003
R40	RESISTOR, 45.3K, 1%, 1/8W	1008200000
R41	RESISTOR, 10K, 1%, 1/8W	1003050026
R51	RESISTOR, 10K, 10%, 1/4W	0170410005
R52	RESISTOR, 10K, 10%, 1/4W	0170410005
R61	RESISTOR, 180, 10%, 1/4W	0175220000
R62	RESISTOR, 10K, 10%, 1/4W	0170410005
R64	RESISTOR, 390, 10%, 1/4W	0178330001
RP1	RES NTWK 8 PIN SIP 10K COM	1005200009
U4	IC. DIGITAL ULN2003A	1005630038
U5	IC. DIGITAL ICL7665S	1010940007
U6	IC. DIGITAL ICL7665S	1010940007
U7	IC. DIGITAL ICL7665S	1010940007
U8	IC. DIGITAL 74HC74	1008000019
U9	IC. DIGITAL 74HC74	1008000019
U10	IC. DIGITAL 74HC14	1006490027
U13	IC. DIGITAL 74HC08	1006490019
U14	IC. DIGITAL 74HC11	1010950002
U16	IC. DIGITAL UDN5703A	1011030004
XP1	CONNECTOR, PCB,TRANSITION,14PIN	1011090147
	CABLE, FLAT, 14 COND. 28AWG	1011170001

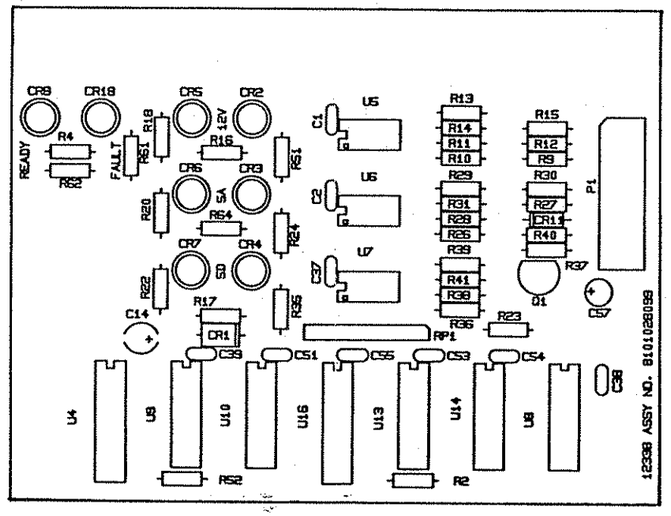

Figure 5.7.6 AC/DC Power Supply Control Assembly 4A9A1, page 1 of 2.

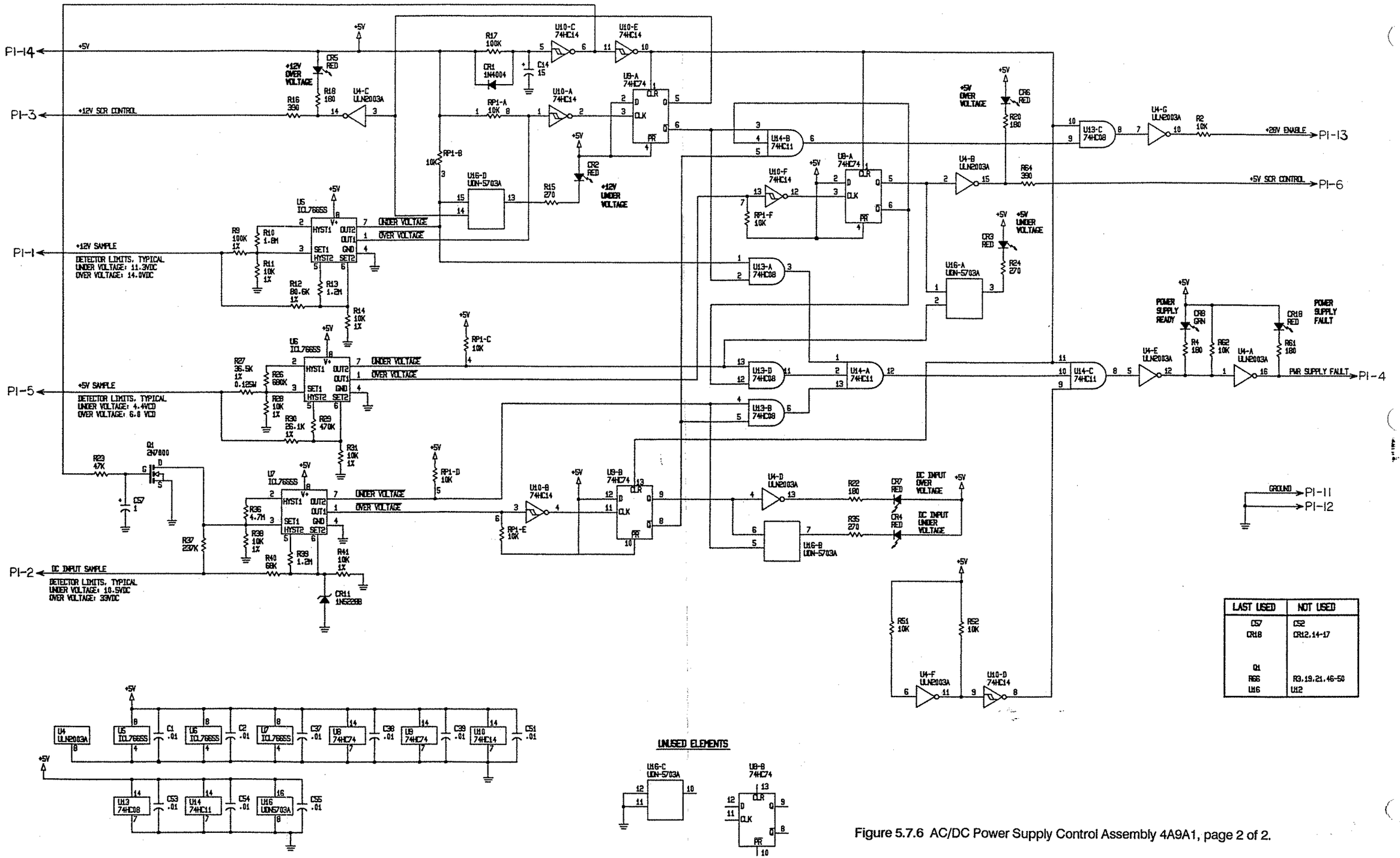

LAST USED	NOT USED
C57	C52
CR18	CR12,14-17
Q1	
R66	R3,19,21,46-50
U16	U12

Figure 5.7.6 AC/DC Power Supply Control Assembly 4A9A1, page 2 of 2.