SUNAIR

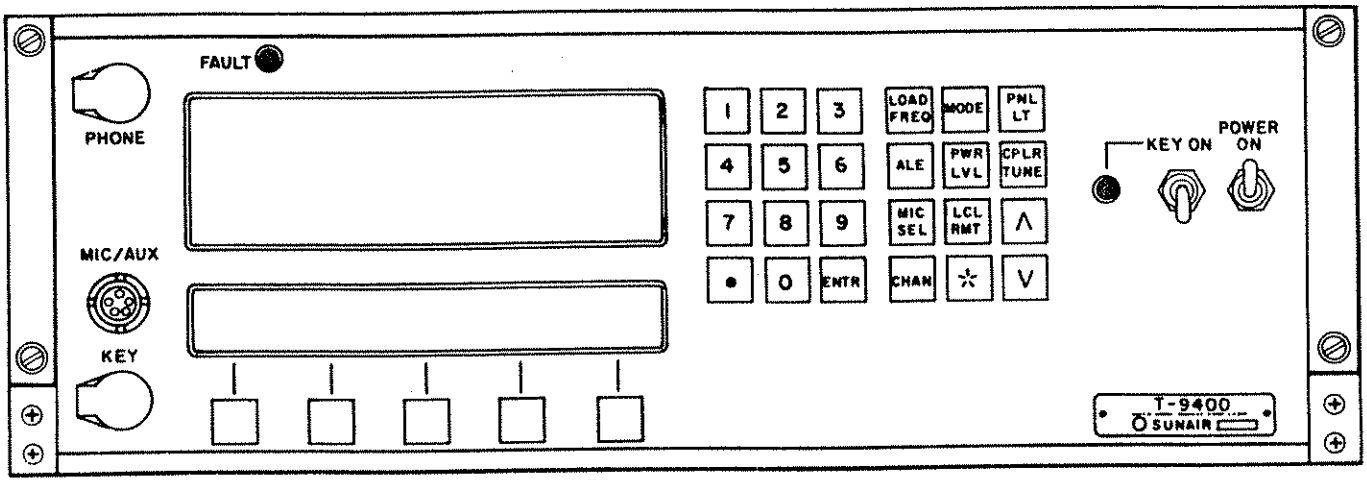

T-9400

DIGITAL HF/ISB EXCITER

OPERATION AND MAINTENANCE MANUAL

FIRST EDITION MARCH, 1991
SECOND REVISION NOVEMBER, 1992

TABLE of CONTENTS (Cont...)

Section	Description	Page
III	OPERATION	
3.1	GENERAL	3-1
3.2	PRIMARY OPERATIONS	3-3
3.2.1	EXCITER SET UP FOR MODE, AGC AND TRANSMIT POWER	3-3
3.2.2	SELECTING AN OPERATING FREQUENCY	3-4
3.2.3	ANTENNA COUPLER TUNING	3-6
3.2.4	PANEL LIGHTING	3-6
3.2.5	OPERATING WITH PRE-SET CHANNELS	3-7
3.2.6	MANUAL CHANNEL SCANNING	3-8
3.2.7	LOADING PRE-SET CHANNEL FREQUENCIES	3-8
3.3	EQUIPMENT SET-UP	3-11
3.3.1	BITE (Built In Test Equipment)	3-11
3.3.2	METER FUNCTIONS	3-13
3.3.3	'MHz' or 'kHz' FREQUENCY DISPLAY	3-14
3.3.4	LOCAL/REMOTE OPERATION	3-15
3.3.5	TIME DISPLAY	3-16
3.3.6	CHANNEL CLEARING AND SOFTWARE REVISION LEVEL	3-18
3.3.7	'I/O' PORT SET-UP	3-19
3.3.8	ADDRESS	3-21
3.3.9	'CW' KEY AND FILTER OPTIONS	3-22
3.3.10	LINE AUDIO SELECTION	3-22
3.3.11	TRANSMIT GAIN CONTROL (TGC SETUP)	3-23
3.3.12	ISB MODE - LSB LINE OR USB LINE METER SELECTION	3-24

TABLE of CONTENTS (Cont...)

Section	Description	Page
3.4	ADVANCED OPERATIONS	3-25
3.4.1	OPTIONS	3-25
3.4.1.1	OVEN	3-25
3.4.1.2	LSB DATA FILTER	3-25
3.4.1.3	USB DATA FILTER	3-26
3.4.1.4	POST SELECTOR	3-27
3.4.1.5	RADIO SECURITY	3-27
IV	THEORY OF OPERATION	
4.1	GENERAL	4-1
4.2	NON-SIGNAL SECTION	4-1
4.2.1	FRONT PANEL ASSEMBLY 1A1	4-1
4.2.2	MICROPROCESSOR ASSEMBLY 1A2A1	4-2
4.2.2.1	GENERAL	4-2
4.2.2.2	MICROPROCESSOR U2	4-2
4.2.2.3	ERASABLE PROGRAMMABLE READ ONLY MEMORY (EPROM) U13	4-2
4.2.2.4	STATIC RANDOM ACCESS MEMORY (SRAM) U3	4-2
4.2.2.5	ELECTRICALLY ERASABLE PROGRAMMABLE READ ONLY MEMORY (EEPROM) U8	4-3
4.2.2.6	OPTIONAL SMART WATCH U14(A)	4-3
4.2.3	OPTOCOUPLER ASSEMBLY 1A2A1A1	4-3
4.2.4	SYNTHESIZER ASSEMBLY 1A2A2	4-3
4.2.4.1	GENERAL	4-3
4.2.4.2	THIRD L.O./BFO ASSEMBLY 1A2A2A3	4-3
4.2.4.3	SECOND L.O. ASSEMBLY 1A2A2A2	4-4
4.2.4.4	FIRST L.O. ASSEMBLY 1A2A2A1	4-4
4.2.4.5	REFERENCE LOOP AND DOUBLER ASSEMBLY 1A2A2A4	4-4

TABLE of CONTENTS (Cont...)

Section	Description	Page
4.3	SIGNAL SECTION	4-4
	4.3.1 GENERAL SIGNAL FLOW	4-5
V	FAULT ISOLATION/MAINTENANCE AND REPAIR	
5.1	GENERAL	5-1
5.2	DISASSEMBLY	5-1
	5.2.1 TOP OR BOTTOM EXCITER COVER REMOVAL	5-1
5.3	TEST SET-UP	5-1
	5.3.1 PRELIMINARY	5-1
5.4	BITE	5-1
	5.4.1 PRELIMINARY	5-1
	5.4.2 NON SIGNAL PATH MODULES	5-9
	5.4.2.1 FRONT PANEL FAULT	5-10
	5.4.2.2 CPU FAULT	5-10
	5.4.2.3 I/O FAULT	5-10
	5.4.2.4 SYNTHESIZER FAULT	5-10
	5.4.2.5 POWER SUPPLY FAULT	5-14
	5.4.3 SIGNAL MODULES	5-19
	5.4.3.1 AUDIO FAULT	5-19
	5.4.3.2 IF FAULT	5-19
	5.4.3.3 FRONT END FAULT	5-19
	5.4.3.4 POWER AMP FAULT	5-19
	5.4.3.5 FILTER MODULE FAULT	5-19
5.5	TROUBLE SHOOTING WITH SELF-SURVEILLANCE BITE	5-20
	5.5.1 DC TO DC POWER SUPPLY	5-20
	5.5.2 AC POWER SUPPLY	5-20
	5.5.3 SELECT/DISTRIBUTION REFERENCE AMPLIFIER	5-20
5.6	TEST EQUIPMENT REQUIRED OR EQUIVALENT	5-23

TABLE of CONTENTS (Cont...)

Section	Description	Page
5.7	EXCITER ALIGNMENT AND CHECKS	5-23
5.7.1	AUTOMATIC LEVEL CONTROL (ALC)	5-27
5.7.2	LOW POWER AUTOMATIC LEVEL CONTROL (ALC)	5-27
5.7.3	AUTOMATIC CARRIER CONTROL (ACC)	5-28
5.7.4	VSWR AUTOMATIC LEVEL CONTROL (ALC)	5-28
5.7.5	AM MODULATION	5-29
5.7.6	USB/LSB MODULATION	5-29
5.7.7	EXCITER OUTPUT FREQUENCY	5-30
5.7.8	USB/LSB TRANSMIT LINE LEVEL	5-30
5.7.9	TRANSMIT GAIN CONTROL (TGC SETUP)	5-32
5.8	SCHEMATICS AND PARTS LISTS	5-34

TABLE of ABBREVIATIONS

ADDR Address
AGC Automatic Gain Control
ALC Automatic Level Control
AM Amplitude Modulation
AME Amplitude Modulation Equivalent
AMP/AMPL Amplifier
ARQ Automatic Request
AUD Audio
AUTO Automatic
AUX Auxiliary
BAUD A variable unit of data transmission speed (bits per second)
BELL U.S. Telephone standards
BFO Beat Frequency Oscillator
BITE Built In Test Equipment
BRD Board
CH /CHAN /CHL/CHN Channel
CLR Clear
CMOS Complementary Metal Oxide Semiconductor
CPLR Coupler
CPU Computer
CW Carrier Wave
dB Decibel
dBm Decibels referred to 1 milliwatt across 600 ohms
DSBSC Double Sideband Suppressed Carrier
DSP Display
DUART Dual Asynchronous Receive/Transmit
EEPROM Electrically Erasable and Programmable Read Only Memory
EPROM Electrically Programmable Read Only Memory
EMI Electromagnetic Radiation Interference
ENTR Enter
FAX Facsimile
FEC Forward Error Correction
FREQ Frequency
FSK Frequency Shift Keying
FWD Forward
GRP Group
HF High Frequency
Hz Hertz
IC Integrated Circuit
IF Intermediate Frequency
I/O Input/Output
IONCAP Ionospheric Communications Analysis and Prediction
kHz Kilohertz
kW Kilowatt
ISB Independent Sideband
LCD Liquid Crystal Display
LCL Local
LED Light Emitting Diode
LK Link
LO Local Oscillator
LP/LPX Lincompex
LRU Lowest Repairable Unit
LSB Lower Sideband
LT Light
LVL Level
MAN Manual
M CH Manual Channel
MED Medium
MHz Megahertz
MIC Microphone
MIL-STD Military Standard
MNL Manual
ms Millisecond
MTTR Mean Time To Repair
MTR Meter
NAR Narrow
O.D. Olive Drab
PA Power Amplifier
PC Printed Circuit
PEP Peak Envelope Power
PLL Phase-Locked Loop
P/N Part Number
PNL Panel
POSTSL Post-Selector
PRESEL Pre-Selector
PTT Push-To-Talk
PWR Power
RCV/RX Receive
REFL Reflected
REV Revision
RF Radio Frequency
RFI Radio Frequency Interference
RFL Reflected
RMT Remote
RS232 Computer control, hardwired up to 50 feet maximum
RS422 Computer control, hardwired up to 4000 feet maximum
RS485 Computer control, hardwired for multiple users
RTTY Radio Teletype
SEL Select
SLO Slow
S MTR Signal Strength Meter
SPKR Speaker
SPLX Simplex
SRAM Static Random Access Memory
SSB Single Sideband
TCXO Temperature Controlled Crystal Oscillator
TGC Transmit Gain Control
THD Total Harmonic Distortion
TTL Transistor Transistor Logic
TX/XMT Transmit
USB Upper Sideband
UTC Universal Time
VCO Voltage Controlled Oscillator
VHF Very High Frequency
VRMS Volts Root Mean Square
VSWR Voltage Standing Wave Ratio
W Watt
WPM Words Per Minute
* Asterisk indicates function selected

LISTING of FIGURES

Section	Description	Page
II	**INSTALLATION**	
Figure 2.4.1.1	T-9400 Outline Dimensions.	2-6
Figure 2.4.1.2	Cable Assembly, T-9400 Audio Interface.	2-7
Figure 2.4.3.1	Outline Dimensions of T-9400 with Shockmount.	2-8
Figure 2.4.3.2	Grounding of T-9400 to Shockmount.	2-9
Figure 2.4.5.1	Installation of T-9400 in Equipment Rack.	2-10
III	**OPERATION**	
Figure 3.1.1	Front panel controls for the T-9400.	3-1
Figure 3.1.2	Operational Display Information Location.	3-2
Figure 3.2.1.1	Exciter Display Screens.	3-4
Figure 3.2.2.1	T-9400 Operating Controls.	3-5
Figure 3.2.5.1	T-9400 Operating Controls.	3-7
Figure 3.2.6.1	T-9400 Manual Channel Scanning Controls.	3-8
Figure 3.2.7.1	T-9400 Channel Loading Controls.	3-9
Figure 3.2.7.2	T-9400 'Feature Display'.	3-10
Figure 3.3.1.1	The T-9400's Function/Status Display Screen.	3-11
Figure 3.3.1.2	Feature Display.	3-12
Figure 3.3.2.1	T-9400 Operational Displays.	3-13
Figure 3.3.2.2	T-9400 Meter Function Select Display.	3-13
Figure 3.3.3.1	T-9400 Operating Controls.	3-14
Figure 3.3.4.1	Local/Remote Selection.	3-15
Figure 3.3.5.1	Feature Menu Display Screen.	3-16
Figure 3.3.5.2	Time Display and Time Set Display.	3-16
Figure 3.3.5.3	Time Display.	3-17
Figure 3.3.5.4	'Set-Time' Display.	3-17
Figure 3.3.6.1	Operational Controls for Selecting Memory Dump.	3-18
Figure 3.3.7.1	T-9400 Rear Surface Connectors.	3-19

LISTING of FIGURES (Cont...)

Section	Description	Page
Figure 3.3.7.2	Feature Display of Port Selection Menu.	3-19
Figure 3.3.7.3	Port Conditioning Menu.	3-20
Figure 3.3.7.4	Baud Rate Display.	3-20
Figure 3.3.7.5	Baud Rate Selection Menu.	3-20
Figure 3.3.8.1	Address 00 Display.	3-21
Figure 3.3.9.1	Feature Menu for Selection of 'CW' Options.	3-22
Figure 3.3.10.1	Feature Display of Port Selection Menu.	3-22
Figure 3.3.10.2	Line Audio Selection Menu.	3-23
Figure 3.3.11.1	Transmit Gain Control Setup.	3-23
Figure 3.3.12.1	Feature Menu Display Screen.	3-24
Figure 3.3.12.2	Meter Function Select Display.	3-24
Figure 3.4.1.2.1	Feature Display for LSB FILTER Selection.	3-25
Figure 3.4.1.2.2	Feature Display for LSB Filter Mode Selection.	3-26
Figure 3.4.1.3.1	Feature Display for USB Filter Selection.	3-26
Figure 3.4.1.3.2	Feature Display for USB Filter Mode Selection.	3-27
Figure 3.4.1.4.1	Feature Display For 'POST-SELECTOR' Selection.	3-27
IV	**THEORY OF OPERATION**	
Figure 4.1.1	T-9400 Block Diagram.	4-7
V	**FAULT ISOLATION/MAINTENANCE AND REPAIR**	
Figure 5.2.1.1	Top or Bottom Exciter Cover Removal.	5-2
Figure 5.3.1.1	Exciter BITE Test Set-Up.	5-3
Figure 5.4.1.1	Top View of T-9400 LRU 'Fault Indicators'.	5-4
Figure 5.4.1.2	Bottom View of T-9400 AC Power LRU 'Fault Indicators' Location.	5-5
Figure 5.4.1.3	Module Cover Removal.	5-6
Figure 5.4.1.4	Major Assembly Locations.	5-7
Figure 5.4.1.5	Feature Display.	5-8

LISTING of FIGURES (Cont...)

Section	Description	Page
Figure 5.4.1.6	The T-9400's Function/Status Display Screen.	5-9
Figure 5.4.2.1.1	Front Panel (1A1) Removal.	5-11
Figure 5.4.2.2.1	Removall/Replacement of CPU 1A2A1 and I/O 2A8.	5-12
Figure 5.4.2.2.2	Removal/Replacement of 1A2A8.	5-13
Figure 5.4.2.4.1	Removal/Installation of Modules 1A4, 1A5, and Optional Fans.	5-15
Figure 5.4.2.4.2	Removal/Installation of AC Power Supply Module 5A2.	5-16
Figure 5.4.2.4.3	Removal/Installation of DC Power Supply PC Board 1A5A1A2.	5-17
Figure 5.4.2.4.4	Removal/Installation of Module 1A3 and 1A5.	5-18
Figure 5.7.1	Exciter Alignment Test Equipment Connections.	5-24
Figure 5.7.2	Alignment Adjustment Locations.	5-26
Figure 5.8.1	Final Tested T-9400, Connector Kit, and Chassis Assembly 1A7.	5-35
Figure 5.8.2	Front Panel Assembly 1A1, 4 pages.	5-36
Figure 5.8.3	PC Assembly, Mother Board 1A2A7, 4 pages.	5-40
Figure 5.8.4	PC Assembly, CPU 1A2A1, 6 pages.	5-44
Figure 5.8.5	PC Assembly Optocoupler 1A2A1A1, 2 pages.	5-50
Figure 5.8.6	Synthesizer Module 1A2A2 PC Assembly.	5-53
Figure 5.8.7	Synthesizer Mother Board 1A2A2A5, 2 pages.	5-54
Figure 5.8.8	PC Assembly, First L.O. 1A2A2A1, 2 pages.	5-56
Figure 5.8.9	PC Assembly, Second L.O. 1A2A2A2, 3 pages.	5-59
Figure 5.8.10	PC Assembly, BFO 1A2A2A3, 2 pages.	5-62
Figure 5.8.11	PC Assembly, Reference Loop and Doubler 1A2A2A4, 2 pages.	5-64
Figure 5.8.12	PC Assembly, Audio 1A2A3, 8 pages.	5-66
Figure 5.8.13	PC Assembly, IF 1A2A4, 10 pages.	5-74
Figure 5.8.14	PC Assembly, Front End 1A2A5, 4 pages.	5-84

LISTING of FIGURES (Cont...)

Section	Description	Page
Figure 5.8.15	PC Assembly, Reference Driver 1A2A6, 2 pages.	5-88
Figure 5.8.16	PC Assembly, I/O Board 1A2A8, 3 pages.	5-91
Figure 5.8.17	PC Assembly, FSK Modem 1A2A8A1, 2 pages.	5-94
Figure 5.8.18	Filter Assembly 1A3.	5-97
Figure 5.8.19	PC Assembly, Detector 1A3AL, 2 pages.	5-98
Figure 5.8.20	PC Assembly, Bands 1-4 1A3A2, 2 pages.	5-100
Figure 5.8.21	PC Assembly, Bands 5-8 1A3A3, 2 pages.	5-102
Figure 5.8.22	Power Amplifier Assembly 1A4, 2 pages.	5-104
Figure 5.8.23	Power Supply Assembly 1A5A1.	5-107
Figure 5.8.24	PC Assembly, Switching Regulators 1A5A1A1, 2 pages.	5-108
Figure 5.8.25	PC Assembly, Control Logic, DC/PS 1A5A1A2, 2 pages.	5-110
Figure 5.8.26	Power Supply Assembly 115/230 VAC 1A5A2, 2 pages.	5-112
Figure 5.8.27	PC Assembly, Filter, AC/PS 1A5A2A1, 1 page.	5-115
Figure 5.8.28	PC Assembly, 28V Regulator, 17 AMP 1A5A2A2, 2 pages.	5-116
Figure 5.8.29	PC Assembly, Rear Panel Connector 1A6A1, 2 pages.	5-118

LISTING of TABLES

Section	Description	Page
V	**FAULT ISOLATION/MAINTENANCE AND REPAIR**	
Table 5.5.1	DC to DC and AC Power Supply Troubleshooting.	5-21
Table 5.5.2	Select/Distribution Reference Amplifier Troubleshooting.	5-22
Table 5.7.1	Power vs Voltage.	5-25
Table 5.7.8.1	Switch Settings for 1A2A1 S1.	5-33
Table 5.8	T-9400 Table of Assemblies.	5-34

THIS PAGE INTENTIONALLY LEFT BLANK.

SECTION I

GENERAL INFORMATION

1.1 SCOPE OF MANUAL

This manual contains information necessary to install, operate, and maintain the T-9400 HF/ISB Digital Exciter. Installation information is in Section II. Operating Instructions are in Section III. Theory of Operation is in Section IV. Maintenance and Repair Procedures are in Section V. Information in this manual applies to all equipment configurations, unless otherwise stated in the text or illustrations.

1.2 PURPOSE OF EQUIPMENT

The T-9400 is a 125 Watt HF/ISB Digital Exciter capable of providing communications from 1.6 to 29.99999 MHz. Modes of operation include USB, LSB, ISB, AME, and CW (FSK, FAX, High Speed DATA, ARQ and FEC are available with optional external modems). The T-9400 is designed to be used in fixed station or mobile environments and can be computer or remotely controlled via RS232/422/485/FSK tones. The standard features along with the available options make the T-9400 the most versatile and expandable HF system on the market today.

Features of the T-9400 include: ISB operation, manual or memory frequency selection in 10 Hz steps, 128 programmable channels, AC/DC operation with auto changeover, keyboard entry, nonvolatile memory using EEPROM (no batteries required), BITE to LRU (Lowest Repairable Unit), computer control, and high speed data capability.

1.3 GENERAL DESCRIPTION

The T-9400 can be used in base station 19 inch rack installations, on table tops, in mobile installations and transportable cases. Its rugged package makes the T-9400 ideal for all environments. Internally, the T-9400 is designed with the service technician in mind. Descriptive readouts on the front panel (BITE) and modularized plug-in assemblies make the MTTR (Mean Time To Repair) less than fifteen (15) minutes. LEDs located on the assemblies allow the technician to pin-point the faulty module immediately. The T-9400 is lightweight for its capability, only thirty-six pounds (36 lbs.) when used on DC only and forty-nine pounds (49 lbs.) with AC supply installed. Available in Olive Drab (OD) or Gray, the T-9400 is compatible with most radio station color schemes. If a particular color other than OD or Gray is required, contact the Sunair Marketing Department for information concerning changes to the standard colors.

The T-9400 has a simple, easily understood front panel. First time users can operate the radio without extensive training. The wide screen LCD is continuously updated by the microprocessor with operational status such as Frequency, Channel, Mode, Power, Local or Remote Control. The LCD also contains a bar graph meter which selectively indicates forward RF power, reverse RF power and remote transmit audio levels. The built-in-test routines include power amplifier and antenna coupler status in plain English messages which appear in the display. Softkeys and a softkey menu LCD display selected options such as Time, CW Filter, etc. The softkeys also provide access to remote control configuration, meter selection, and other operating features not found on the front panel keyboard.

1.4 TECHNICAL SPECIFICATIONS

1.4.1 GENERAL

FREQUENCY RANGE: 1.6 to 29.99999 MHz in 10 Hz steps.

PROGRAMMABLE CHANNELS: 128.

FREQUENCY STABILITY: 1 X 10^6 (Optional ± 1 part in 10^6).

MODES OF OPERATION: USB, LSB, ISB, CW, AME, DATA (RTTY, ARQ, FEC,FAX with optional external modems).

MEMORY RETENTION: Non-Volatile.

SYNTHESIZER LOCK: 10 ms.

REMOTE INTERFACE: RS232/422/485 (FSK Tone Optional).

RF OUTPUT IMPEDANCE: 50 Ohm nominal, unbalanced.

BITE: Fault isolated to module level (LRU), descriptive readout on front panel and individual module indication.

INPUT POWER: AC - 115/230 VAC ±15%, 50/60 Hz; DC +26 VDC ±15%; AC/DC Auto Changeover.

SIZE - INCHES (CM): 5.96H (15.2) X 17.83W (45.4) X 17.66L (44.9).

WEIGHT - POUNDS (KG): DC - 36 (16.3); AC - 49 (22.3).

CONSTRUCTION: Modular plug-in assemblies.

1.4.2 TRANSMITTER SPECIFICATIONS

OUTPUT POWER: Normal Operation - 125 Watts PEP and Average for SSB; 125 Watts CW; 40 Watts Carrier in AM. ISB operation 100 Watts PEP total (25 Watts per channel).

HARMONIC SUPPRESSION: -45 dB second order, -55 dB third and higher orders.

INTERMODULATION DISTORTION: 36 dB below PEP.

CARRIER SUPPRESSION: 50 dB below PEP.

UNDESIRED SIDEBAND: 50 dB below PEP @ 1.5 kHz.

HUM & NOISE LEVEL: 50 dB below PEP.

VSWR: Operates at VSWR 2.0:1 (Automatic power reduction above 2.0:1).

AUDIO INPUT: Microphone auxiliary connector, and two independently selectable 600 ohm lines per sideband at -20 dBm to +10 dBm.

AUTOMATIC LEVEL CONTROL: SSB 125 Watts ±1 dB.
ISB no more then 2 dB change due to modulation in the adjacent sideband.

TRANSMIT GAIN CONTROL: ISB Operation 25 Watts per channel ±1 dB.

AUDIO COMPRESSION: 10 dB nominal (Internal Disable).

1.4.3 ENVIRONMENTAL

TEMPERATURE: -30°C to +50°C.

HUMIDITY: 100% at 50°C.

RAIN: MIL-STD-810D, Method 506.2.

SHOCK: MIL-STD-810D, Method 516.3.

VIBRATION: MIL-STD-810D, Method 514.6.

1.5 HIGH FREQUENCY PROPAGATION

When HF radio is used, a limited amount of communication is accomplished in a direct line. Some radio waves will travel outward from the transmit antenna along the ground (ground wave propagation) but these waves soon lose their strength and are eventually lost. The greater use of HF radio is via Skywave Propagation which, simply stated, is a process of using the ionosphere to bend the radio waves back to earth to arrive at the distant station. To be successful in using the ionosphere in this manner you must:

a) Have a general knowledge of the ionosphere and its affect on radio waves.
b) Select the proper frequency to work in conjunction with the condition of theionosphere.
c) Insure the angle of radiation of the radio waves is correct for the condition of the ionosphere and the distance to the receiving station.

Proper frequency selection is critical for effective communication. To select the proper frequency, consulting any of the available sources of such information as 'IONCAP' would be of great benefit. In the absence of such information, viable paths may be selected by receiver monitoring for calls originating near the destination of interest or by trial and error. For example, a high frequency at night, when the ionosphere is at its weakest, would be too strong and the signal would go completely through the ionosphere and out into space. Too low a frequency during the day, when the ionosphere is the most dense, would create a situation where the signal is so weak the ionosphere would totally absorb the radio waves and nothing would return to earth. The general rule of thumb, then is; higher frequencies in the day, lower frequencies at night.

The angle of radiation or take-off angle of a given antenna is also crucial to effective communication. The distance from where the signal exits the transmit antenna to the point at which it returns to earth depends on the angle it enters the ionosphere. If the angle is HIGH, the distance of the signal will be SHORT. If the angle is LOW, the distance will be FAR. The angle of radiation also presents another problem. Too steep an angle means the area of interaction between radio wave and ionosphere is smaller and the danger of the radio wave going straight through and into space increases. Check the literature of the antenna system in use to be sure the angle of radiation or take off angle is consistent with the distance over which you wish to communicate.

1.6 EQUIPMENT SUPPLIED

The following is a list of equipment, with appropriate Sunair part numbers, supplied with the T-9400 Exciter.

Supplied Equipment:	Sunair Part Numbers:
Exciter, T-9400	8103001295 O.D. 8103001252 GRAY
Hand Held Microphone Assembly	8076000602
Manual	8103000507
Mating Connector Kit	8076000491
Power Cord Assembly, 115VAC or Power Cord Assembly, 230VAC	8076002095 8076002192

1.7 OPTIONS AVAILABLE

The following is a list of optional equipment or accessories available for use with the T-9400 Transceiver.

Optional Equipment/Accessories:	Sunair Model/Part Numbers:
High Stability Reference Oscillator	5024013701
Digital Antenna Coupler, CU-9125	8085000296 O.D. 8085000253 GRAY
Kilowatt Digital Antenna Coupler, 1000 Watt Operation, CU-9100	8104001094 O.D. 8104001051 GRAY
Solid State Kilowatt Amplifier, LPA-9600	8105001098 O.D. 8105001055 GRAY
Remote Control Unit, RCU-9310/T	8078801297 O.D. 8078801254 GRAY
Remote Control Unit (Computer Control), RPC-9286D	8078201001
Headset	0840200005
Headset, with Dynamic Microphone	1012220001
CW Key with Phone Plug	5024000994
Clock	1011190010
Audio Interface Cable	8076004594

Optional Equipment/Accessories:	Sunair Model/Part Numbers:
Desktop Microphone	8076000891
Shockmount Assembly (Mobile Application)	8076002591
Rackmount Kit with Slides	8076004896 O.D. 8076004853 GRAY
Blower Kit	8076006091
Power Cord Assembly, DC	8076002290
Depot Spares Kit , Gray	8103901059
Depot Spares Kit , O. D.	8103901091

THIS PAGE INTENTIONALLY LEFT BLANK.

SECTION II

INSTALLATION

2.1 GENERAL

Section II contains all necessary instructions for the unpacking, inspection, and if necessary, reshipping of damaged equipment or parts. In addition, further information regarding location and mounting considerations, power requirements, antenna and ground system hook-ups and final checkouts after installation is also provided.

2.2 UNPACKING AND INSPECTION

As soon as you have received your unit(s), unpack and inspect all components and accessories. Check the packing list to be sure you have received all items ordered, and that all items necessary for operation have been ordered.

NOTE: Be sure to retain the carton and its associated packing materials should it be necessary to reship damaged equipment.

Do not accept a shipment when there are visible signs of damage to the cartons until a complete inspection is made. If there is a shortage of items or any evidence of damage, insist on a notation to that effect on the shipping papers before signing the receipt from the carrier. If concealed damage is discovered after the shipment has been accepted, notify the carrier immediately in writing and await his inspection before making any disposition of the shipment. A full report of the damage should also be forwarded to Sunairs Product Services Department. Please be sure to include the following information for prompt service:

a) ORDER NUMBER.
b) MODEL AND SERIAL NUMBER.
c) NAME OF TRANSPORTATION AGENCY.
d) APPLICABLE DATES.

Upon receipt of this information arrangements will be made, by Sunair, for repair or replacement.

2.3 RETURN OF EQUIPMENT TO FACTORY

The shipping carton for the T-9400 has been designed to protect the equipment during shipment. The container and its associated packing materials should be used to reship the unit. When necessary to return equipment to Sunair for warranty or non-warranty repair, an authorization number is required. This number can be obtained from our Product Services Department: TELEPHONE: (305) 525-1505, TELEX: 51-4443, CABLE SUNAIR, FACSIMILE: (305) 765-1322.

If the original shipping carton is not available, be sure to carefully pack each unit separately, using suitable cushioning material where necessary. Very special attention should be given to providing enough packing material around connectors and other protrusions from the unit. Rigid cardboard should be placed at the corners of the equipment to protect against denting. DO NOT USE DUNNAGE (STYROFOAM PEANUTS) FOR PACKING PROTECTION, they may allow the unit to shift while being shipped, and, therefore, become damaged.

When returning subassemblies or components for repair or replacement, be sure to pack each separately, using suitable cushioning material.

Shipment to be made PREPAID consigned to:

Sunair Electronics, Inc.
Product Services Department
3101 SW Third Avenue
Fort Lauderdale, Florida 33315-3389
U.S.A.

Plainly mark with indelible ink all mailing documents as follows:

US Goods Returned For Repair
Value For Customs - $(Amount)

Mark ALL SIDES of the package:

FRAGILE - ELECTRONIC EQUIPMENT!

NOTE: Before shipping, carefully inspect the package to be sure it is marked properly and is securely wrapped.

2.4 GENERAL INSTALLATION AND MOUNTING INFORMATION

Satisfactory operation of this equipment will depend upon the care and thoroughness taken during installation.

2.4.1 GENERAL INSTALLATION

For installation and use with KW equipment, modems, and other peripherals. Use this manual in conjunction with their respective operating manuals for complete installation information.

a) Carefully plan exciter/peripherals/coupler/antenna locations, observing the following requirements before starting installation.

b) Provide best possible RF ground for exciter and coupler. Use flat copper strap 1" wide or No. 6 or larger wire and connect to ground terminal at rear of exciter. Leads to ground system should be as short as possible.

c) Provide separation between coupler output and exciter with its associated wiring. Coupler may be mounted up to 100 feet from exciter if RG58 RF coax cable is use, or further if RG8 RF coax cable is used.

d) Antenna lead from coupler to antenna must be insulated for at least 10 kV potential. The lead should run parallel to metal fittings or other metal objects that are bonded to the system ground. The coupler should be as close to the antenna as possible, and never more than three (3) feet distant as this will decrease antenna efficiency.

e) If the equipment is installed on a wood or fiberglass boat, approximately ten (10) to twelve (12) square feet of metal surface area in contact with the water should be provided for use as an RF ground.

f) If operated on DC power, check for correct polarity before applying power.

NOTE: Linear amplifiers with low level drive such as used in the T-9400 will oscillate if the RF power output is radiated or conducted into the low level stages. Evidence of this situation is erratic or excessive power output. This is caused by close proximity of the coupler output and antenna to the transmitter and/or inadequate RF grounds. Carefully following the above procedures will prevent this from occurring.

Connection of the T-9400 to power sources, antennas, antenna couplers and other equipment may be accomplished as follows:

TO ADD	CONNECT	NOTE
AC Power	AC source to J1 on rear panel.	See Figure 2.4.1.1.
DC Power (DC Power Cable optional)	DC source to J3 on rear panel.	See Figure 2.4.1.1.
Antenna	Antenna to J4 on rear panel.	Only if antenna coupler not required.
CW Key	Key to J1 on front panel.	See Figure 2.4.1.1.
Microphone or optional Headset	Microphone or optional Headset to J3 on front panel.	See Figure 2.4.1.1.
Headphones	Headphones to J2 on front panel.	See Figure 2.4.1.1.
Antenna Coupler (CU-9125)	Antenna coupler control line from J1 (CU-9125) to accessory connector J6 on rear panel of the T-9400.	See Figure 2.4.1.1 and consult CU-9125 Manual (Figures 2.2 and 2.8).
	Coaxial signal line from J2 (CU-9125) to antenna connector J4 on rear panel of the T-9400.	
Power Amplifier (LPA-9600)	LPA control lines from J5 (LPA-9600) to accessory connector J6 on the rear panel of the T-9400.	See Figure 2.4.1.1 and consult LPA-9600 Manual (Figure 2.1).
	Coaxial signal line from J2 (LPA-9600) to antenna connector J4 on rear panel of the T-9400.	
External Data Modems (Direct Connection T-9400)	Connect modem audio and keyline to T-9400 through audio connector J5 on the rear panel of the T-9400.	See Figure 2.4.1.1 and 2.4.1.2.
Remote Control (RCU-9310/T)	Control lines from J6 (RCU-9310/T) to remote connector J8 on the rear panel of the T-9400.	See Figure 2.4.1.1 and consult RCU-9310/T Manual.
	Audio lines from J4 (RCU-9310/T) to audio connector J5 on rear panel of the T-9400.	
Remote Control (RPC-9286)	Control lines from J2 (RPC-9286) to remote connector J8 on the rear panel of the T-9400.	See Figure 2.4.1.1 and consult RPC-9286 Manual.
	Signal line from J3 (RPC-9286) to audio connector J5 on rear panel of the T-9400.	

2.4.2 BASE STATION INSTALLATION

The T-9400 is equipped with rubber feet so that it can be placed directly on a table, desk or similar flat surface. The front feet are taller then the rear feet to tilt the exciter at a convenient operating angle. Minimum clearance of one (1) inch at the sides and two (2) inches at the rear and top should be allowed to provide for adequate cooling of the rear panel heat sinks. If extended periods of RTTY transmission are anticipated, forced air cooling of the heat sinks is recommended. Figure 2.4.1.1 shows the applicable outline dimensions of the equipment and the location of imputs and outputs for microphones, antennas, antenna couplers, remote controls, signal lines, and modems.

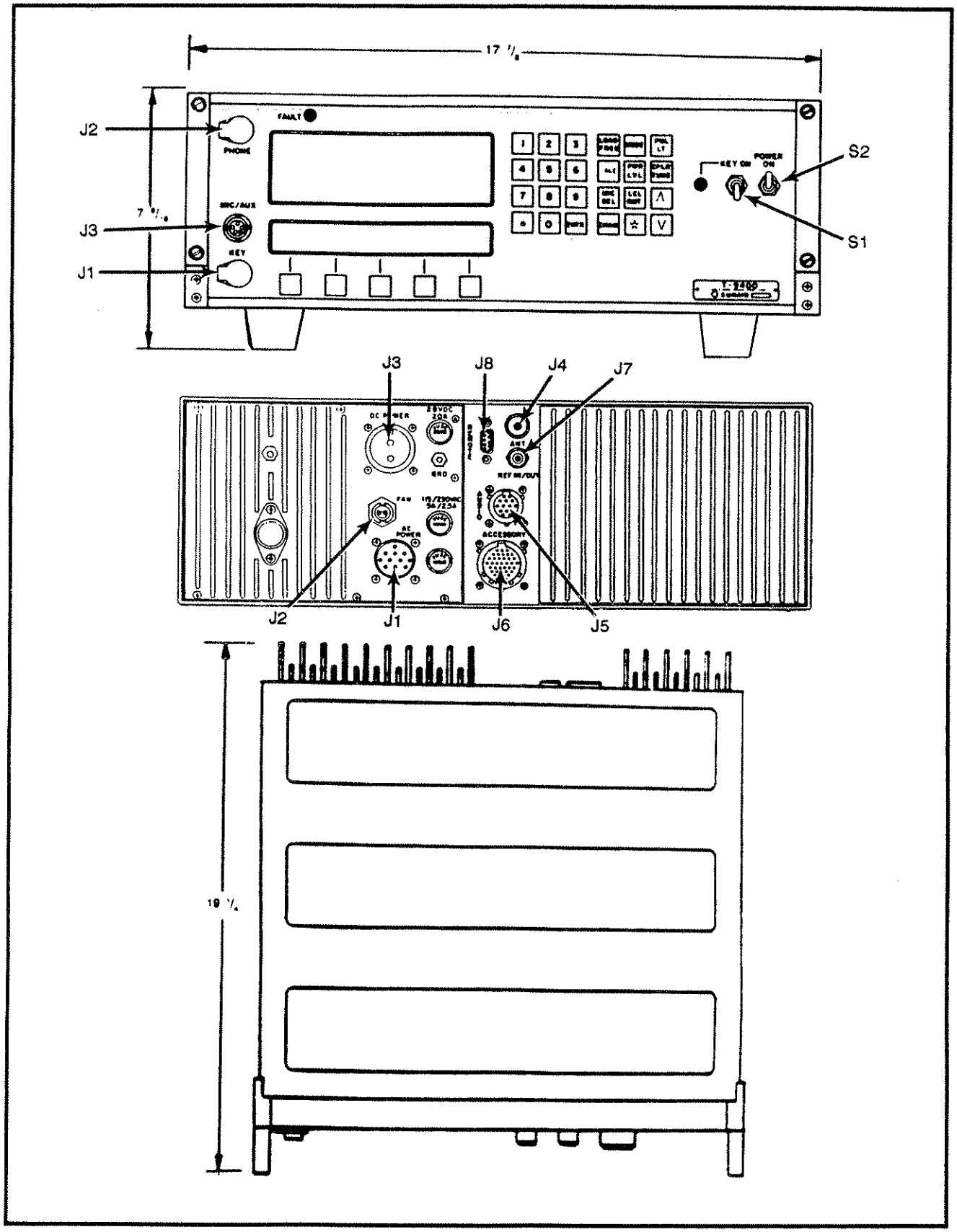

Figure 2.4.1.1 T-9400 Outline Dimensions.

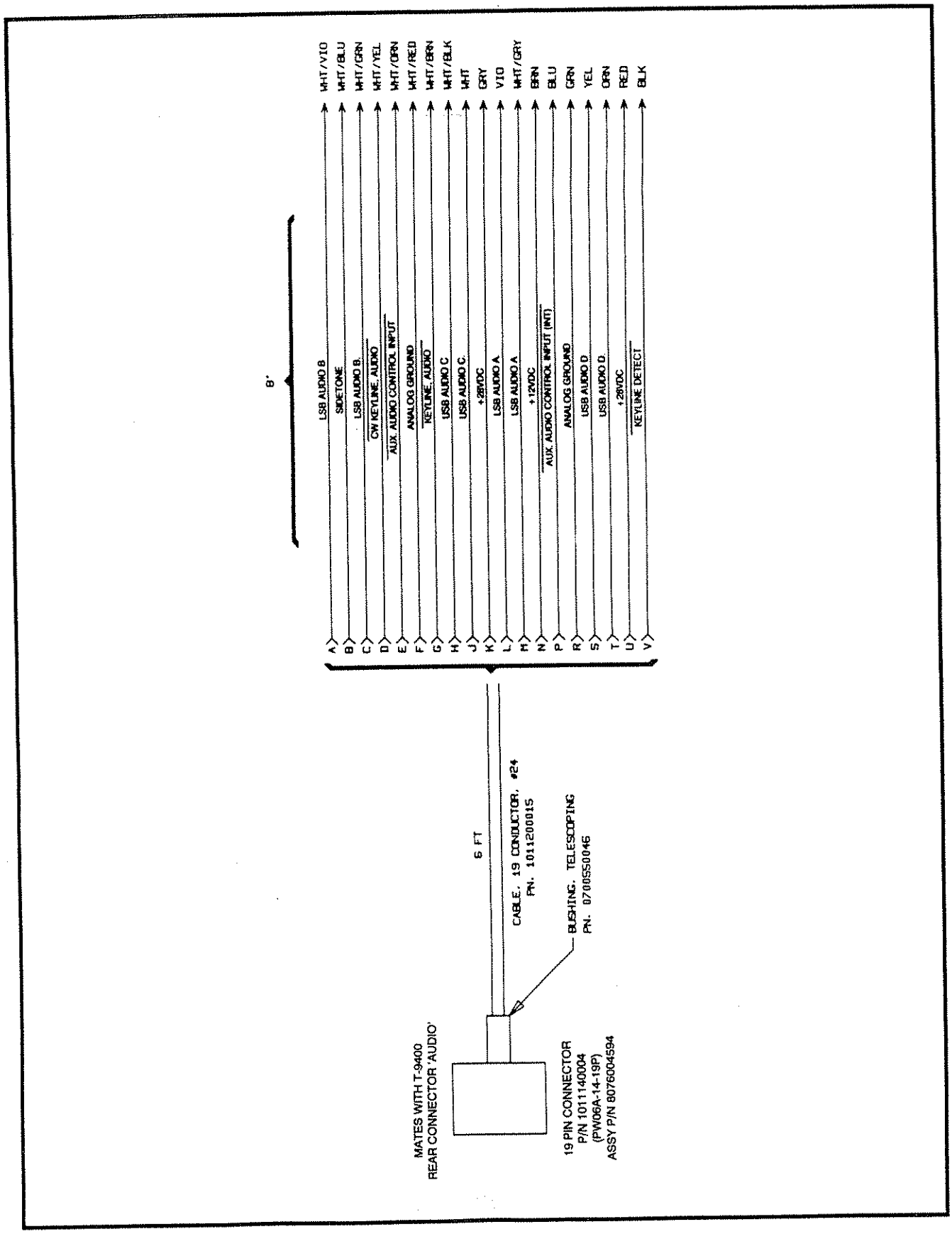

Figure 2.4.1.2 Cable Assembly, T-9400 Audio Interface.

2.4.3 VEHICULAR INSTALLATIONS

The T-9400 Shockmount Assembly (Sunair p/n 8076002591) is designed to mount the exciter in vehicular/mobile installations. Figure 2.4.3.1 gives the applicable outline dimensions for the T-9400 coupled with the shockmount.

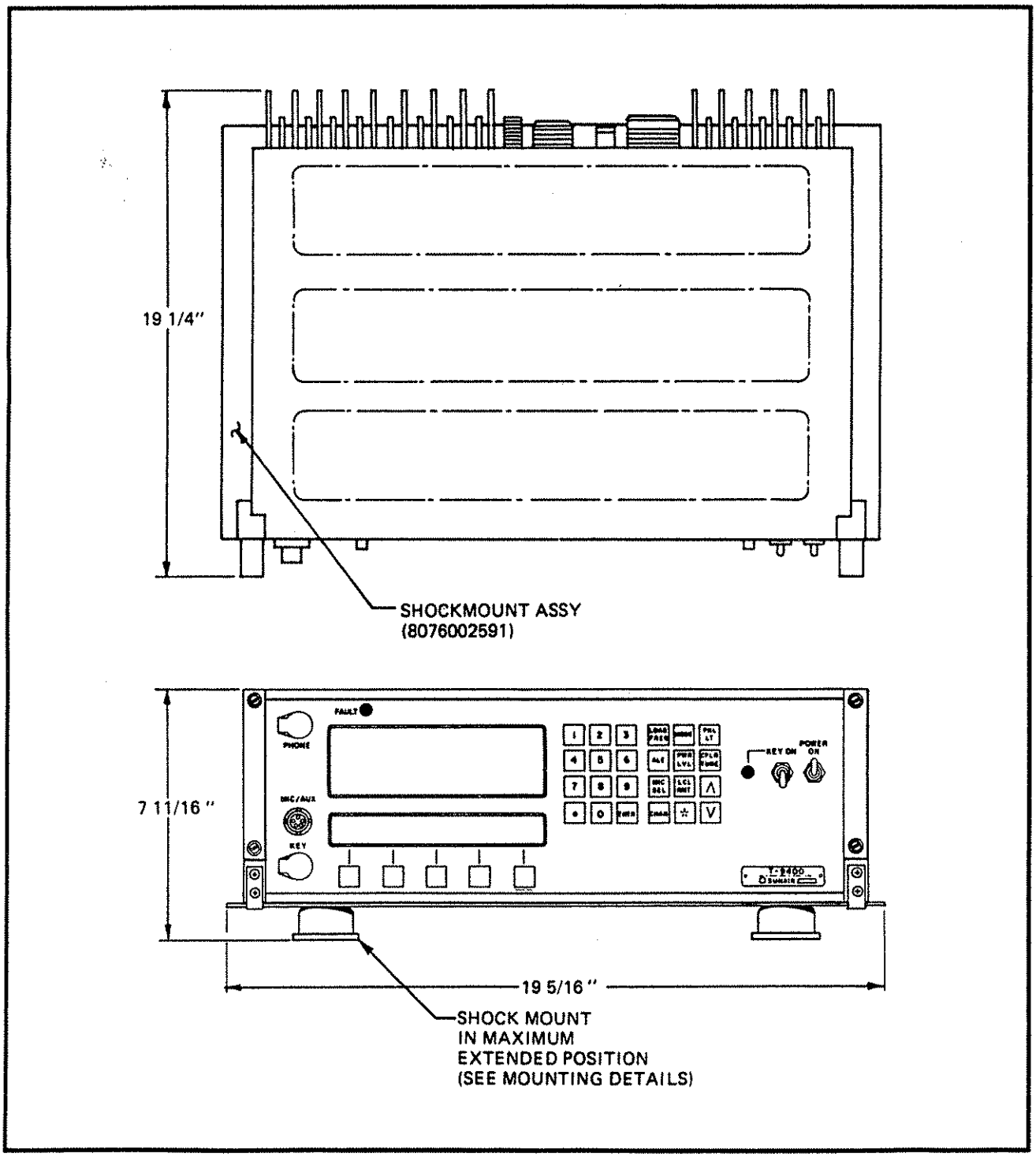

Figure 2.4.3.1 Outline Dimensions of T-9400 with Shockmount.

In order to minimize RF pickup, it is important that the ground strap supplied with the shockmount be securely fastened between the ground post on the equipment and the bottom of the right rear shock isolator (see detail in Figure 2.4.3.2). It is also important to ground the antenna coupler to the frame of the vehicle by the shortest possible path.

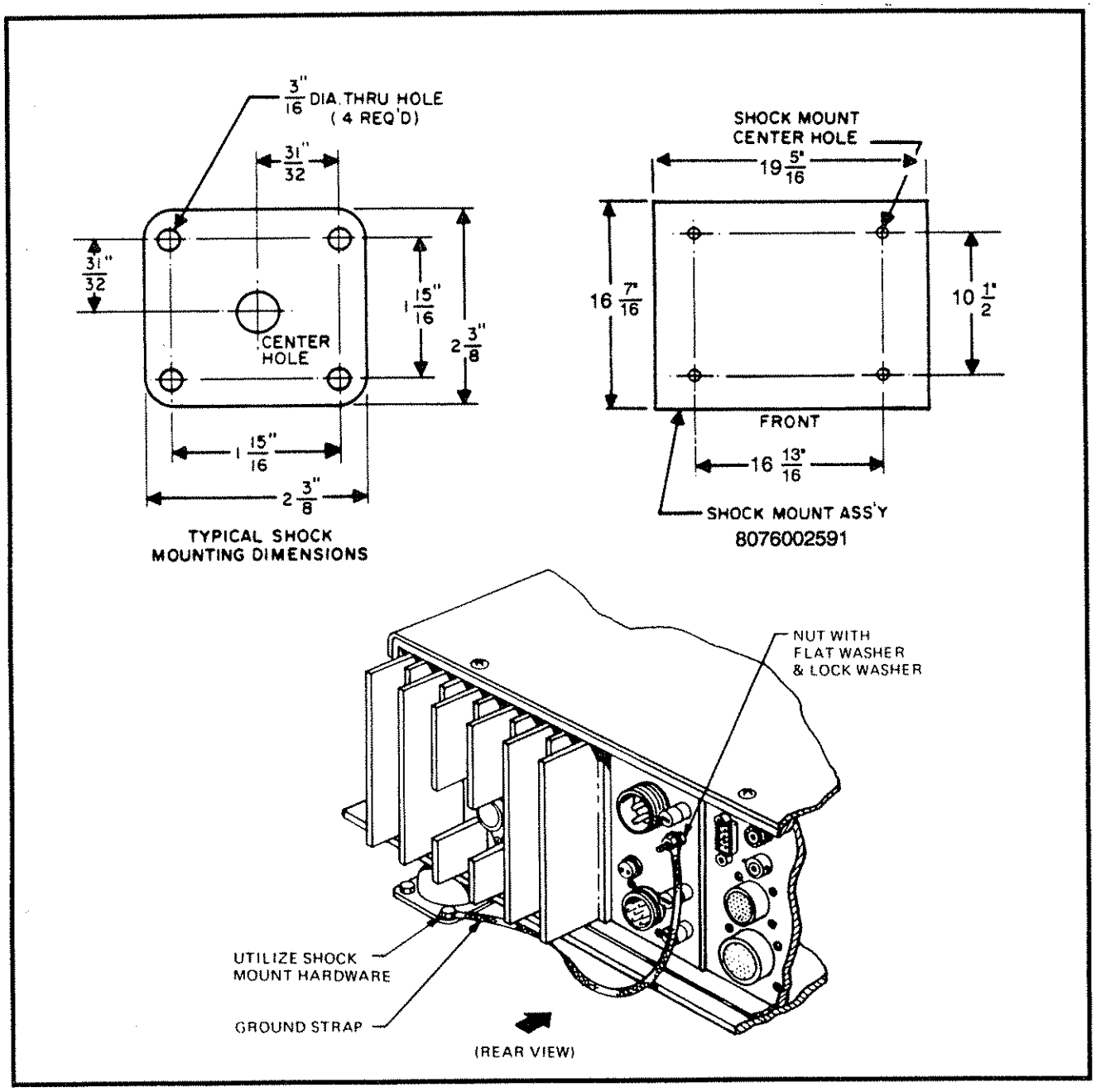

Figure 2.4.3.2 Grounding of T-9400 to Shockmount.

2.4.4 MARINE INSTALLATIONS

In marine installations, follow the same recommendations as outlined in paragraph 2.4.3. If the equipment is installed on a wood or fiberglass boat, a ground plate of twelve (12) square feet minimum area in contact with the water should be installed. A heavy ground lead such as a one inch (1") wide strap or braid should be connected between the ground post on the equipment and the ground plate. The length of this ground lead should be held to an absolute minimum commensurate with a neat installation.

2.4.5 RACK INSTALLATIONS

The exciter may be conveniently mounted in a standard nineteen inch (19") rack using the Rackmount Kit (Sunair p/n 8076004853[Grey] or 8076004896[OD]). The kit includes rack slides, associated hardware and filler panels. The exciter, in the rack mounted configuration, requires a standard panel space of seven inches (7") high. Refer to Figure 2.4.5.1 for assembly details.

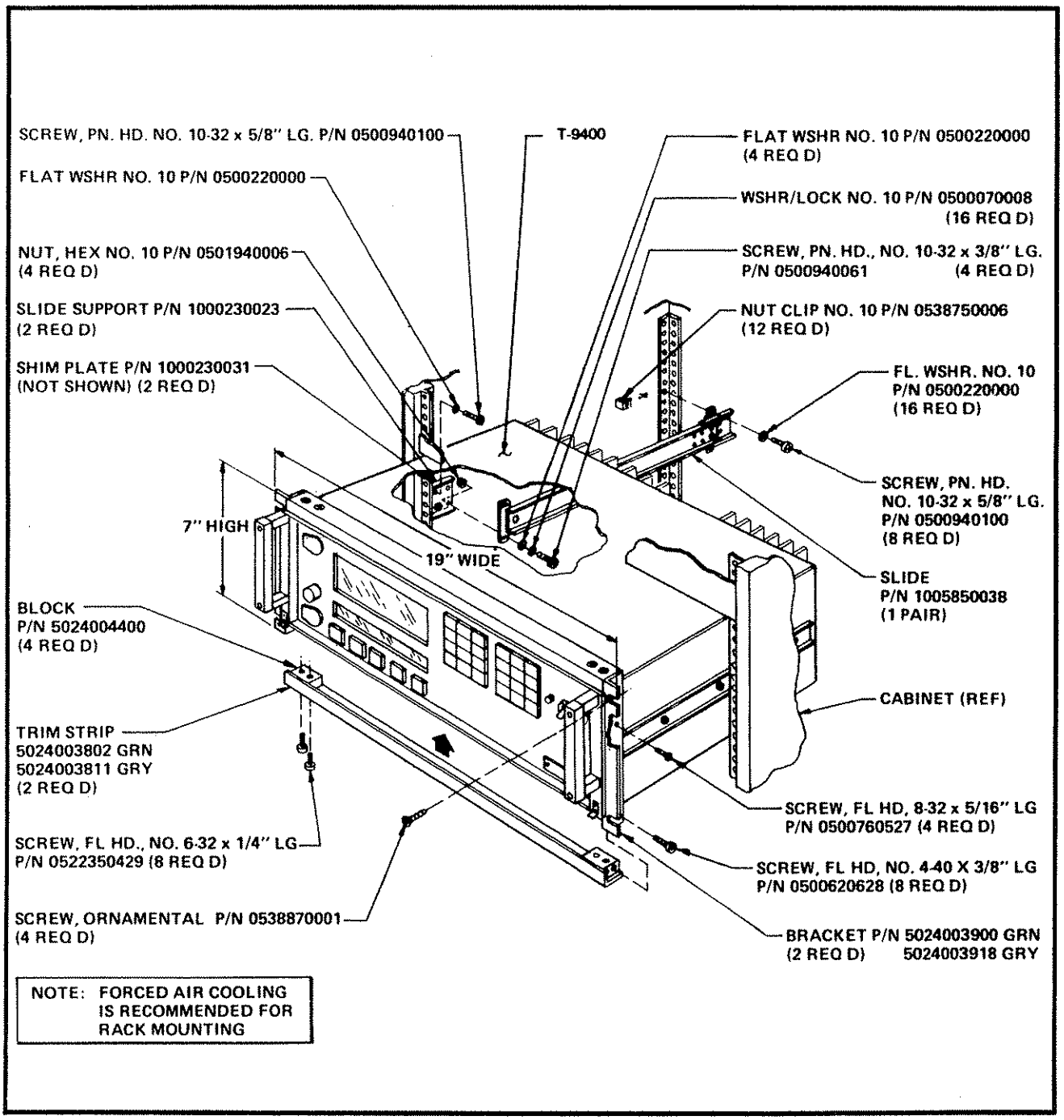

Figure 2.4.5.1 Installation of T-9400 in Equipment Rack.

2.5 ANTENNAS AND GROUND SYSTEMS

2.5.1 GENERAL

The T-9400 is designed to operate into a 50 ohm resistive antenna system with a maximum Voltage Standing Wave Ratio (VSWR) of 2:1. When used with the CU-9125 Digital Antenna Coupler, the system will match antennas ranging from sixteen (16) foot whips to 150 foot long wires. The coupler will also efficiently match nine (9) foot whip antennas at frequencies above 4 MHz.

As there are numerous types of antennas, a complete discussion is beyond the scope of this manual. Antennas for use in the 1.6 to 30 MHz spectrum generally fall into three of the following categories:

a) Narrow Band 50 ohm Antennas.
b) Random Length Non-Resonant Antennas.
c) Broad Band 50 ohm Antennas.

NOTE: Some general 'DOs' and 'DONTs' of antenna installation are:

a) The antenna should be clear of all large objects such as trees, buildings and power lines.
b) Although the CU-9125 Digital Antenna Coupler will match electrically short antennas (i.e. those under 1/8 wavelength), such antennas are not efficient radiators. If the installation permits, antennas over 1/8 wavelength long at the lowest operating frequency should be used. Antenna length generally limits system performance in vehicular applications at frequencies below four (4) MHz as proper size would be innapropriate for the vehicle.
c) When using whip antennas, the ground system actually forms part of the radiating system. Where space permits (such as in a base station installation) a good ground plan or radial system should be installed at the base of the antenna.

NOTE: An inadequate ground system is most often responsible for disappointing performance when using a whip antenna.

d) In vehicular installations and marine installations in a metal hull ship, one inch (1") wide strap or braid should be connected between the antenna coupler ground and the frame of the vehicle. The length should be as short as possible. In an installation aboard a wood or fiberglass boat, a ground plate with at least 12 square feet in contact with the water should be attached to the hull and a short, 1 inch wide strap should be connected between the coupler ground post and the plate. As previously mentioned this ground lead should be as short as possible.

2.5.2 NARROW BAND 50 OHM ANTENNAS

Typical of this type of antenna are the Doublet and the Inverted V. Both types of antennas may be assembled from the Sunair Doublet Antenna Kit (p/n 0996240004). Their operation is efficient for only a narrow band of frequencies within approximately 1 1/2% of their center frequency. The antenna coupler is NOT generally required if the frequency span of the antenna is not exceeded. Both antennas exhibit somewhat directional characteristics. The direction of maximum radiation is perpendicular to the antenna wire. The inverted V antenna is particularly suitable for communication with nearby mobile stations (with vertical antennas) since a portion of the radiation is in a vertical direction.

2.5.3 RANDOM LENGTH NON-RESONANT ANTENNAS

Whips and longwires are popular non-resonant antennas. The whip antenna is often used in mobile, marine, portable or semi-portable installations because it is rugged and self-supporting. The antenna impedance is strongly dependent on the operating frequency, therefore, an antenna coupler MUST BE used to match the antenna to the transceiver. Best radiation efficiency will be obtained if the antenna is at least 1/8 wavelength

long at the lowest operating frequency; however, this requirement does not result in a practical size antenna for low frequency operation. Thirty-five foot (35') whip antennas offer a good compromise between practical height and good electrical performance at low frequencies. The CU-9125 Digital Antenna Coupler is designed to efficiently match whip antennas of 16 foot length or greater. An efficient match may also be obtained for a 9 foot whip above 4 MHz. The whip's performance is greatly influenced by its ground system. For temporary base station installations, a minimum of four (4), six foot (6') long ground rods should be driven into the ground symmetrically placed around the antenna base. The rods should be bonded together with heavy strap and then connected to the antenna coupler ground by another short heavy strap. If the antenna is mounted on the roof of a building, where a short ground lead to the coupler cannot be obtained, a minimum of four (4) symmetrically placed ground radials should be installed at the base of the antenna, bonded together, and connected to the antenna coupler ground post. The radials should be made of number 12 gauge wire or larger and should be at least 1/4 wave long at the lowest operating frequency. The radiation pattern is omnidirectional in the horizontal plane.

The longwire antenna, is a popular base station antenna where a wide range of operating frequencies are used. The antenna impedance varies greatly with frequency and, therefore, MUST BE matched to the transceiver with an antenna coupler. The CU-9125 will efficiently match longwire antennas up to 150 feet in length. The radiation pattern of the longwire antenna is also a function of the operating frequency. The two most popular length longwire antennas, 75 and 150 feet (Sunair p/n's 0999200003 and 099210009), exhibit excellent low frequency radiation efficiency.

2.5.4 BROADBAND 50 OHM ANTENNAS

These are generally complex, expensive antennas requiring a large area for installation. Their use is usually limited to high performance base station installations which must operate at an extended frequency range. As this class of antennas has approximately 50 ohm output impedance over the rated band of frequencies, an antenna coupler is NOT required.

Some common examples are:

a) Discone (a vertical antenna with an omni-directional pattern)

b) Log Periodic (a broadband antenna with a directional pattern), this antenna is often made in a rotatable configuration.

Consult Sunair's Marketing and Product Services Departments for specific recommendations.

SECTION III

OPERATION

3.1 GENERAL

This section provides the operator with the location and use of the T-9400 front panel controls for proper utilization of the equipment. For convenience of discussion, functions are addressed in normal sequence. However, it is not necessary to observe this order once the user becomes familiar with the equipment. Any setting may be changed independently by referring to the appropriate section in this chapter pertaining to the function in question. Reference to Figure 3.1.1 below, shows the location of the control groupings, displays, and their general purpose.

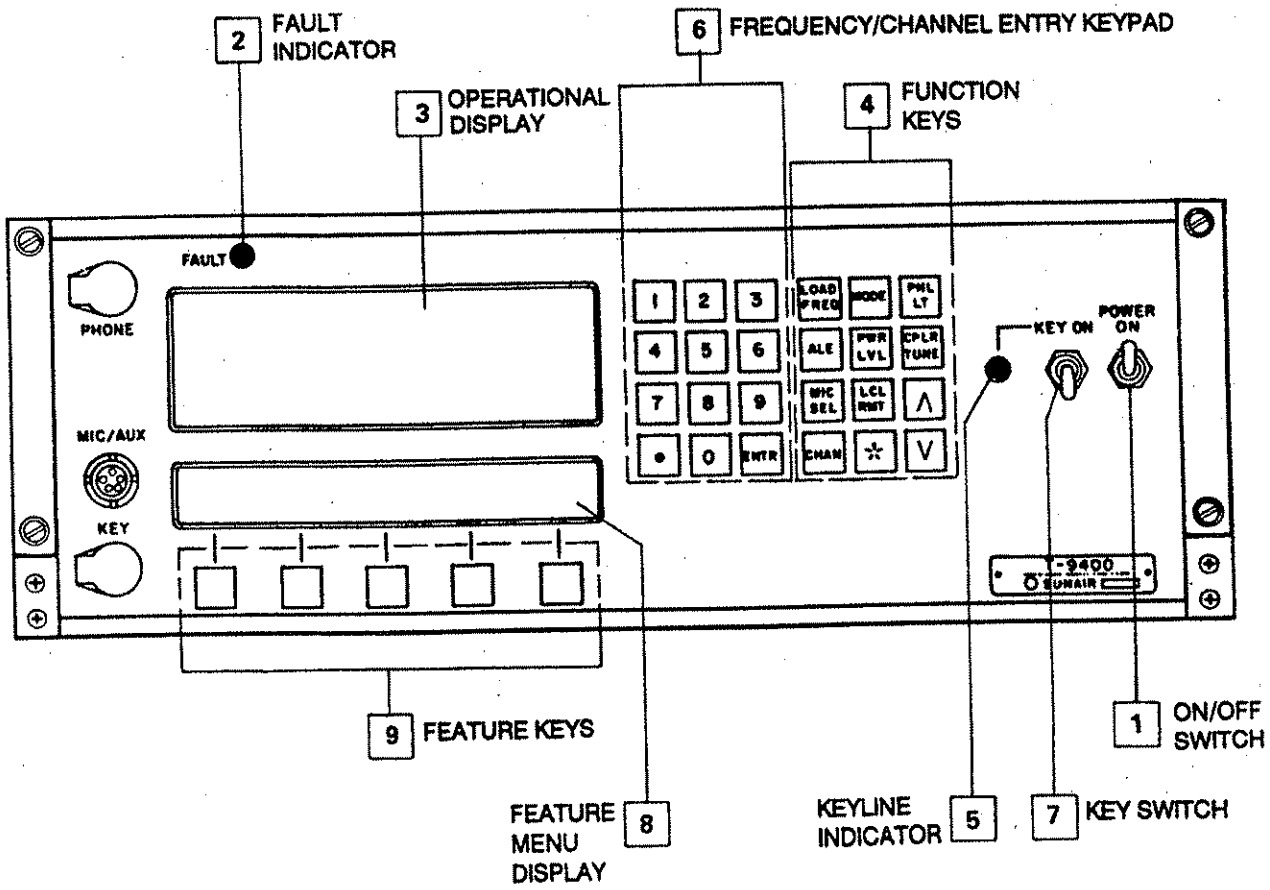

Figure 3.1.1 Front Panel Controls for the T-9400.

1 ON/OFF CONTROL

Push the switch to the upward position.

2 FAULT INDICATOR

If at any time this red indicator is lit, there is a fault in the radio. Please check the installation and proceed to the section on BITE, located in section 3.3.1 of this manual.

3 OPERATIONAL DISPLAY

This liquid Crystal Display (LCD), provides a variety of information required to operate the equipment. Information will appear in four (4) primary areas of the screen as indicated in Figure 3.1.2.

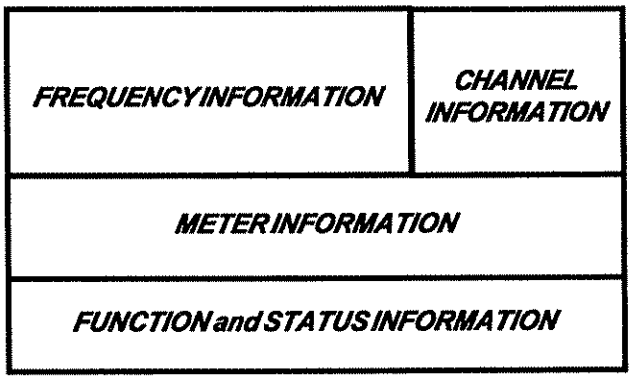

Figure 3.1.2 Operational Display Information Location.

4 FUNCTION KEYS

This grouping of twelve (12) keys is used to control or establish the primary operating functions of the equipment such as mode selection, channel selection, channel loading, microphone select, local/remote operation, power output level selection, panel illumination, and coupler tune command.

5 KEYLINE INDICATOR

When illuminated, the exciter is in the keyed condition.

6 FREQUENCY/CHANNEL ENTRY KEYS

This group of twelve (12) numeric keys is used for entry of frequency or channel information, either to establish a particular operating frequency or load frequency information into channel storage for later recall.

7 KEY SWITCH

When set in the 'UP' position, the exciter is permanently keyed 'ON'.

8 FEATURE MENU DISPLAY

This display provides names or functions for the five (5) keys located directly below the display. In most cases, this display will automatically indicate the appropriate selections based upon the condition of other equipment settings. The menu may be changed at will, however, by depression of the fifth key located under 'MORE'.

9 FEATURE KEYS

This grouping of five (5) 'SOFT' keys will enable the various functions indicated in the display located directly above the key.

NOTE: An asterisk (*) appearing in the display indicates that the feature preceding it is enabled or 'ON'.

Utilization of the controls of the T-9400 Exciter can be divided into two (2) categories:

A. Primary Operations (Section 3.2)

B. Equipment Set-Up (Section 3.3)

3.2 PRIMARY OPERATIONS

3.2.1 EXCITER SET UP FOR MODE, MIC AND TRANSMIT POWER

Turn the equipment on **1** , and refer to Figure 3.2.1.1. The operational display should appear as indicated in the figure except that specific frequencies and modes will reflect the condition of the equipment when last used. Depress 'MODE' key **2** , to select the desired mode of transmission as indicated in the display segment at **3** . Choices are USB, LSB, ISB, CW, and AM.

Depress MIC key **4** , to select MIC connection, which will be indicated in the display segment at **5** . Choices are 'ON' (U or L) or 'OFF' (O) for each sideband.

Exciter power output **6** is indicated in this segment of the operational display and will normally read '125W' (Watts). If '65W' (Watts) is desired, then depressing the 'PWR LVL' (Power Level) Key **7** will condition the exciter accordingly.

NOTE: ISB operation 'PWR LVL' will normally read '100W' (Watts). If '50W' (Watts) is desired then depressing the 'PWR LVL' key **7** will condition the exciter accordingly.

NOTE: Since the T-9400 is frequently used with a one kilowatt Linear Power Amplifier (LPA), provisions have been made in the system for adjustment to the '1000W' (Watt) and '500W' (Watt) levels as well, if the LPA is connected to the output of the exciter.

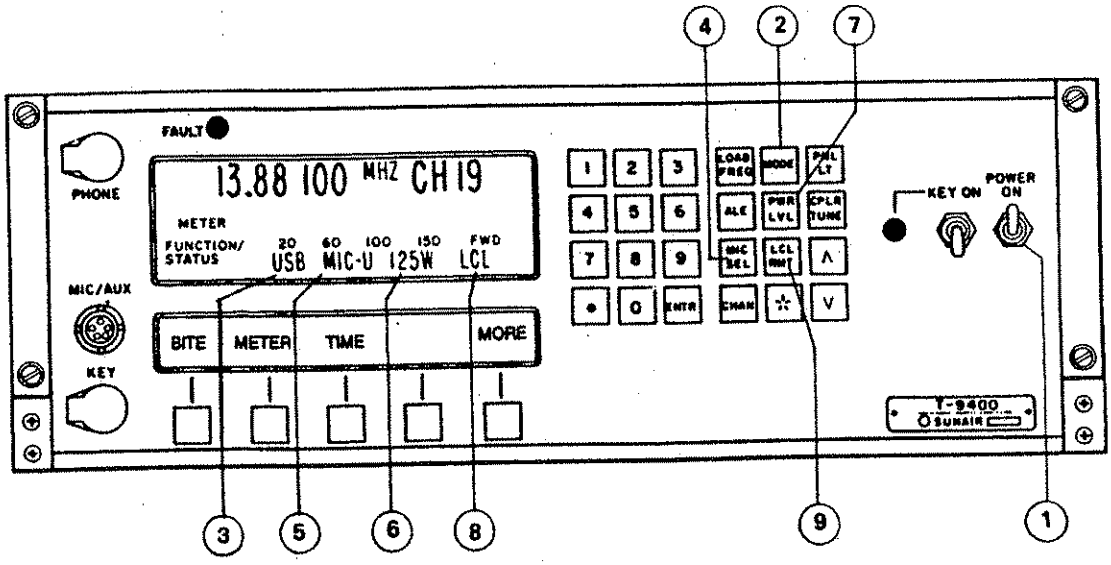

Figure 3.2.1.1 Exciter Display Screens.

This section of the operational display indicates the point of control of the exciter and should read 'LCL' (Local) **8** unless a remote unit is connected to the exciter and presently has control - in which case the display will read 'RMT' (Remote). To change control back to the exciter simply depress the 'LCL/RMT' (Local/Remote) key **9**.

NOTE: If the exciter is not connected to remote control equipment the display should always read 'LCL' and depression of the 'LCL/ RMT' key will produce the message:

'NO REMOTE SYSTEM'

on the display. (Also see section 3.3.4.)

THE BASIC FUNCTIONAL PARAMETERS OF THE EXCITER HAVE NOW BEEN ESTABLISHED.

3.2.2 ESTABLISHING AN OPERATING FREQUENCY

If channel display **1** does not indicate the desired frequency at **4** , refer to Figure 3.2.2.1, then depress 'LOAD FREQ' key **2** . Depression of the 'LOAD FREQ' key, will blank the operational display frequency screen located at **4** , and change feature display to provide 'ERASE' and 'END' functions.

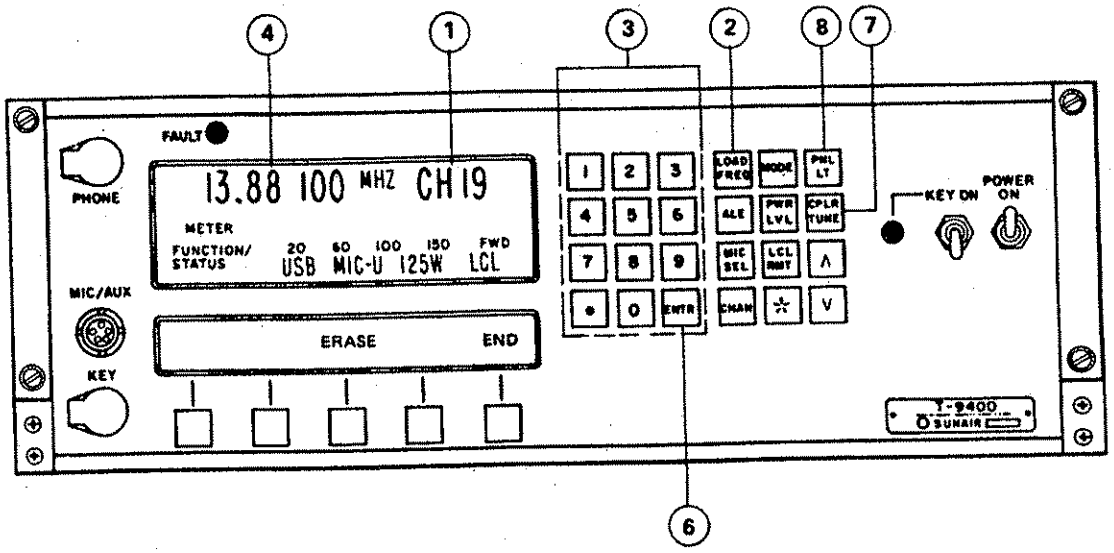

Figure 3.2.2.1 T-9400 Operating Controls.

The numeric keypad, **3** , may now be used to enter any operational frequency by entering seven (7) digits. (For frequencies less than 10 MHz, the first digit entered must be '0'). The numbers being entered will appear on the display at **4** , in the order of entry from left to right. When seven (7) digits have been entered depress the 'ENTER' key, **6** , to activate the exciter.

THE EXCITER IS NOW OPERATIONAL ON THE FREQUENCY SELECTED

NOTE: If an error is made in entering a frequency, simply depress the 'LOAD FREQ' key to clear the screen and repeat the procedure.

NOTE: If a frequency below 1.6 MHz is entered, the frequency will flash on and off and the message:

'ILLEGAL XMIT FREQ'

will appear on the status screen.

If the exciter output is terminated in a Broadband Antenna, or is feeding a Linear Power Amplifier such as the LPA 9600, whose termination is a Broadband Antenna, transmitter tuning occurs automatically and:

THE EXCITER IS NOW FULLY OPERATIONAL.

NOTE: When the 'LOAD FREQ' key is depressed, the equipment feature display **9** will change to provide an 'ERASE' function at **10**. As shown in Figure 3.2.7.2. Depression of this key will erase the numeric frequency entry, one digit at a time, beginning with the last digit entered (right to left). When the desired digits are blanked, simply resume keypad entry of frequency. Do not depress 'END' key **18** unless you desire to abort frequency loading and have the channel revert to its original stored information.

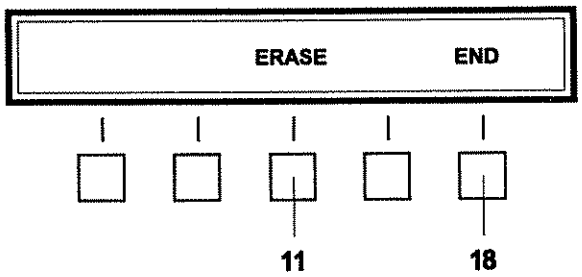

Figure 3.2.7.2 T-9400 Feature Display.

Once the desired frequency has been entered, depress the 'ENTER' key **6** to store the information.

B. To load Mode of Emission, depress the 'MODE' key **11** successively until the desired mode appears on the function display at **12** . Choices are: 'USB', 'LSB', 'ISB', 'CW', and 'AM'. Depress 'ENTER' key **6** .

NOTE: If 'CW' is selected as a mode of emission, key release time is automatically established by default to medium. Other choices are available and are covered in Section 3.3.8 of this manual.

C. To load Power Level depress 'PWR LVL' key **13** successively until desired power level appears on function display at **14** . Choices are '125W' or '65W' SSB. '100W' or '50W' ISB operation. Depress 'ENTER' key **6** .

All of the storage data for this channel has now been entered and the exciter is fully operational on this channel. Additional channels may be loaded by simply repeating this process.

3.3 EQUIPMENT SET-UP

This section addresses those features and functions that are either of secondary operational importance or need be accomplished only infrequently, usually at the time of commissioning.

3.3.1 BITE (Built In Test Equipment)

The T-9400 is equipped with sufficient self-diagnostics to permit the operator to assure himself that all internal subassemblies (LRUs) are functioning correctly or, in the case of malfunction, which specific LRU(s) are faulty. This program may be accessed independent of any prior established modes of operation.

Depress the Feature Menu 'MORE' key **1** successively until the Feature Menu shown in Figure 3.3.1.1 is indicated on the Feature Menu Display **2** .

Depress the 'BITE' key **3** . The equipment will initiate a self test routine of all common modules and will display the results at Function/Status **4** of the Operational Display. The initial message will be:

'BITE IN PROGRESS'.

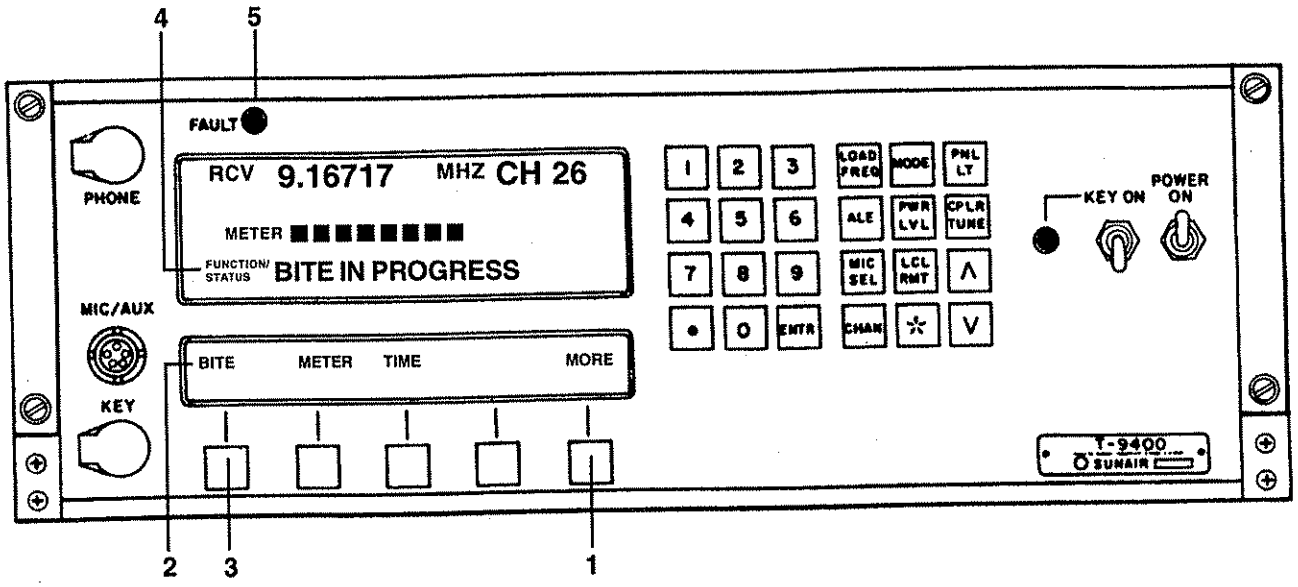

Figure 3.3.1.1 The T-9400's Operational and Feature Menu Displays.

As each common module is tested a corresponding message will appear briefly on the Operational Display in the following order:

'FRONT PANEL O.K.'	*or*	'FRONT PANEL FAULT'
'CPU O.K.'	*or*	'CPU FAULT'
'SYNTHESIZER O.K.'	*or*	'SYNTHESIZER FAULT'
'POWER SUPPLY O.K.'	*or*	'POWER SUPPLY FAULT'
'I/O O.K.'	*or*	'I/O FAULT'

THIS PAGE INTENTIONALLY LEFT BLANK.

3.3.2 METER FUNCTIONS

A variety of metering functions are available on the front panel operation display at **1** in Figure 3.3.2.1 for transmit conditions.

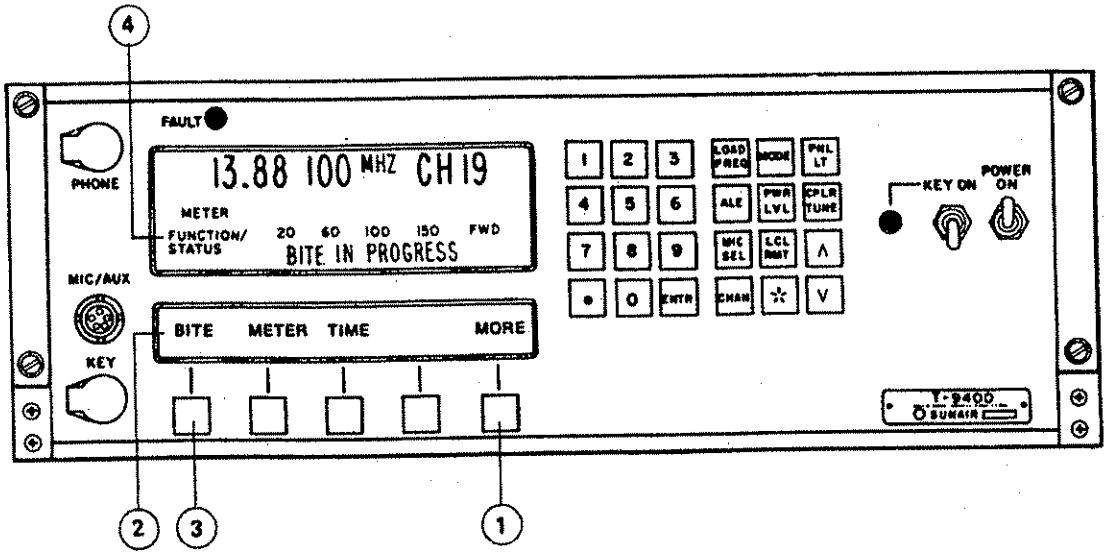

Figure 3.3.2.1 T-9400 Operational Displays.

The available Meter functions are:

'FWD' - Forward RF Power Output (shown in Figure 3.3.2.1).
'RFL' - Reflected RF Power.
'LINE' - 600 OHM Line Audio Input (either USB or LSB).
'ALC' - Automatic Level Control Voltage.

To make the desired selections depress the feature menu select key 'MORE' **2** until the feature display screen appears as indicated by **3** .

Depress the 'METER' function key **4** and the feature select screen will appear as shown in Figure 3.3.2.2.

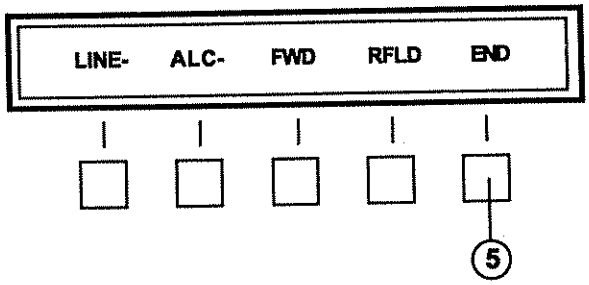

Figure 3.3.2.2 T-9400 Meter Function Select Display.

3.3.5 TIME DISPLAY

If a clock has not been installed, depression of the 'TIME' feature key will produce the message 'NO CLOCK INSTALLED' on the Function/status display. For equipment supplied with the clock option, the time function may be accessed by successively depressing the feature menu select key 'MORE' **1** until the feature menu shown in Figure 3.3.5.1 appears in the display.

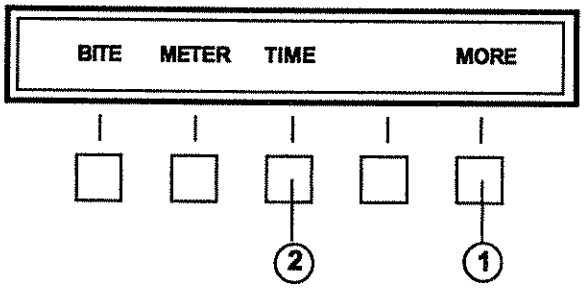

Figure 3.3.5.1 Feature Menu Display Screen.

Depress 'TIME' select key, **2** . Display will now appear as shown in Figure 3.3.5.2.

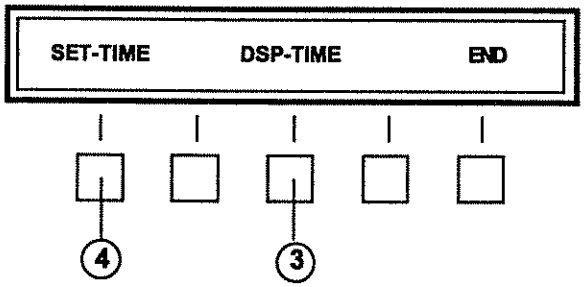

Figure 3.3.5.2 Time Display and Time Set Display.

Time can now be displayed by depressing the feature select key 'DSP-TIME' (Display Time) **3** . The presentation will appear as shown in Figure 3.3.5.3.

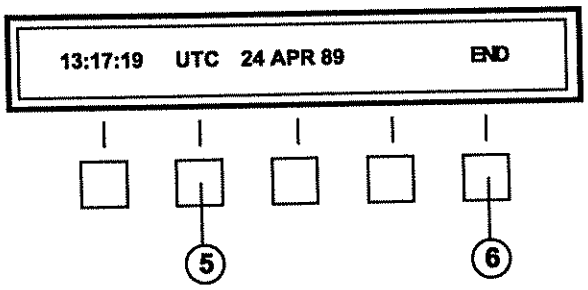

Figure 3.3.5.3 Time Display.

Other times such as 'EST' (Eastern Standard Time) and 'PST' (Pacific Standard Time) may be viewed by successive depressions of the selector key **5** .

Depression of the 'END' key **6** will cause the display to revert to that shown in Figure 3.3.5.2.

TO SET TIME:

Depress the 'SET-TIME' key **4** . The display will appear as shown in Figure 3.3.5.4.

NOTE: Use UTC Time ONLY.

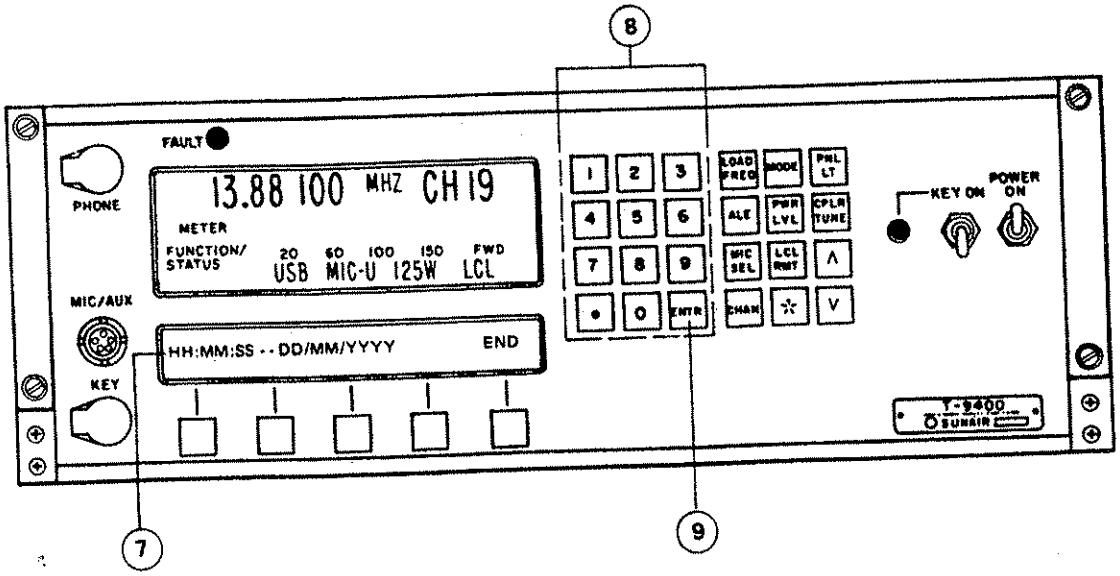

Figure 3.3.5.4 'Set-Time' Display.

The first 'H' (Hour) **7** will flash, indicating the space in the display for numeric keyboard entry. As the first number is entered on the numeric keypad, **8** , the second space will flash, and so on, until numbers have been entered for hours, minutes, seconds—day, month, and year.

When the last digit has been entered, depress the 'ENTER' key **9** to set the clock. The display will revert to that shown in Figure 3.3.5.2. Depress the 'DSP-TIME' key **3** to display the time.

3.3.6 CHANNEL CLEARING AND SOFTWARE REVISION LEVEL

To clear ALL pre-programmed channel information, otherwise referenced as a memory dump, depress feature menu select key 'MORE' **1** until feature display appears as indicated in Figure 3.3.6.1.

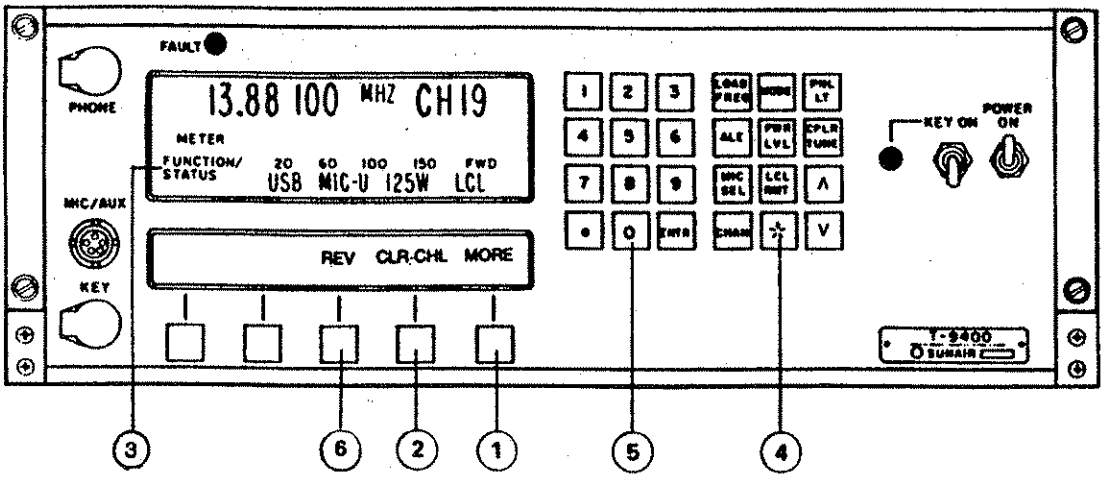

Figure 3.3.6.1 Operational Controls for Selecting Memory Dump.

Depress the 'CLR-CHL' (Clear Channel) feature key, **2** . The function status screen **3** will go blank and the message:

'PRESS *0* TO CLEAR ALL CHANNELS'

will appear on the feature display. If you **DO NOT** wish to clear **ALL** channels in memory, depress the feature key 'END' and the display will revert to its normal operational presentation.

If you do wish to clear all channel information in memory, depress the asterisk (*) key **4** , then the zero '0' key **5** , and finally the asterisk (*) key **4** again. The memory will now be cleared.

To view the software revision (Rev) level installed on CPU and I/O PC assemblies:

Depress the 'REV' feature key **6** . An asterisk will appear at 'REV*' on feature display and function status screen **3** will display the message:

'REV CPU-XX IO-XX'

Depress the 'REV' feature key **6** again. The asterisk at 'REV' on feature display will go out, and the operational display will return to normal.

9000 SERIES EQUIPMENT REMOTE CONTROL
I/O REMOTE CONTROL SELECTION

INTERIM OPERATING INSTRUCTIONS FOR I/O ACCESS USING CODE KEY

The following instructions apply to software revisions: RT-9000: C24, R-9200: B10, T-9400: A16, RCU-9310: A12, RCU-9310R: A2, RCU-9310T: A2 and all subsequent revisions.

Important Operating Notes:

(a) An * (asterisk) associated with a function indicates that the function is enabled.

(b) If no * (asterisk) appears on the Port A Conditioning Feature Menu Display the I/O is disabled.

(c) Pressing **END** will exit the I/O selection menu.

I/O PORT SET-UP

Refer to section 3.3.8 I/O Port Set-Up page revision 7/29/97 for Feature Menu Display details.

To access and configure the 9000 series equipment I/O PORT SET-UP accomplish the following steps:

1.0 Depress the **I/O** key. Located in position 2 on the Feature Menu Display.

2.0 **ENTER CODE NUMBER** will be displayed at position number 3 on the Feature Menu Display.

3.0 Enter code: **2580**, using the Frequency/Channel Entry Keypad. Note: The Operational LCD display will display a square block on the right-hand side of the Operational Display for each keypress entry.

4.0 The Operational display FUNCTION /STATUS field will now display the selected Mode, AGC , RF power and remote control status.

5.0 The Feature Display will change to: **RS232 RS422 RS485 MODEM END.**

6.0 Select the desired remote control mode, Example **RS232**. Note: The companion remote control device and remote control interconnecting cable must be configured for the selected operating mode and bit-per-second rate before proper operation can be achieved.

7.0 Upon selecting the operating mode the Feature Menu will change to: **BAUD ADDRESS END.**

8.0 Select the desired **BAUD** rate in bit-per-second.

9.0 Select the desired equipment **ADDRESS.**

10.0 Depress **END.**

11.0 **ENTER CODE NUMBER** will be displayed in the Feature Menu.

12.0 Enter code: **2580**, using the Frequency/Channel Entry Keypad. Note: The Operational LCD display will display a square block on the right-hand side of the Operational Display for each keypress entry.

13.0 The Feature Display will change to: **RS232 RS422 RS485 MODEM END**

14.0 Depress **END**.

14.0 The radio will return to normal operation.

3.3.7 'I/O' PORT SET-UP

This section deals with conditioning the T-9400 to automatically handle information, in the correct format, for external modems and/or remote lines. The exciter provides dual informational outputs located on the rear surface of the equipment as shown in Figure 3.3.7.1. Although both ports use the same connector, the plug wiring may be split to accommodate different routings for each port.

NOTE: If I/O Ports are NOT being utilized, NO I/O function should be selected. Any selection could cause 'I/O FAULT' or 'NO REPLY FROM REMOTE' to be displayed after running BITE test, or intermittently during normal operation.

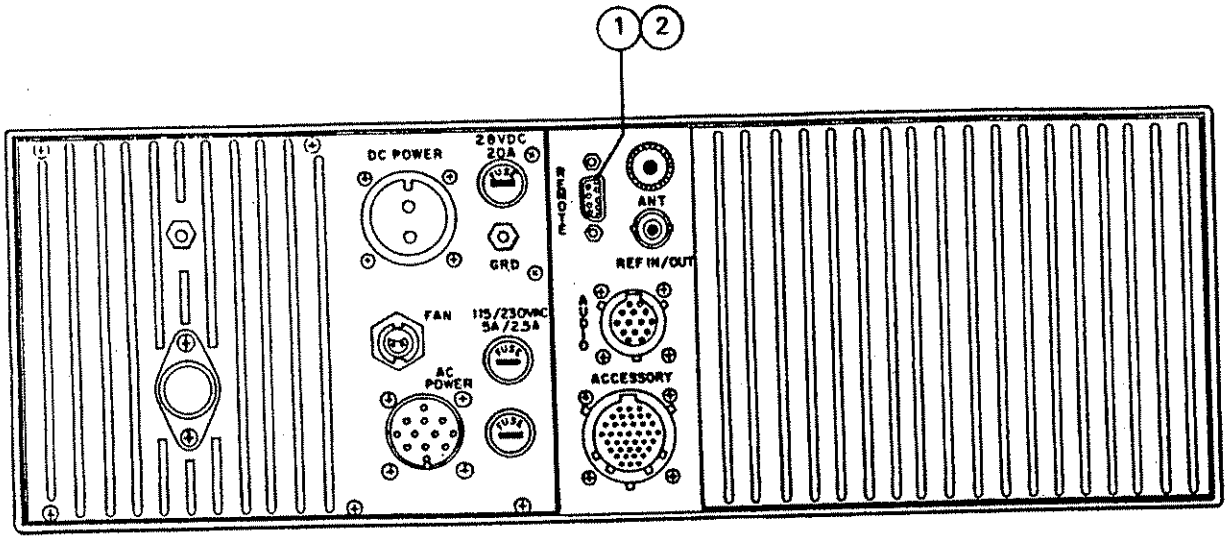

Figure 3.3.7.1 T-9400 Rear Surface Connectors.

The location of 'PORT A' is shown by **1** , the location of 'PORT B' by **2** (Same Connector). Port A is a dedicated RS232 port, used for specific predetermined operations, such as 'Post-Selectors', etc. The correct output format for port B is determined by the requirements of the modem(s) and/or lines connected to this port. Once the desired format is determined, remote port 'B' may be conditioned by depressing the feature menu select key 'MORE' **1** successively until the display shown in Figure 3.3.7.2 appears.

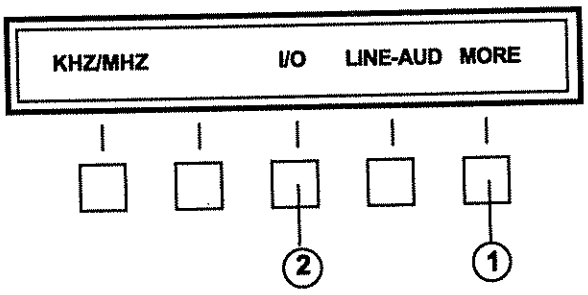

Figure 3.3.7.2 Feature Display of Port Selection Menu.

Depress the 'I/O' select key **2** . The feature display will now read as shown in Figure 3.3.7.3.

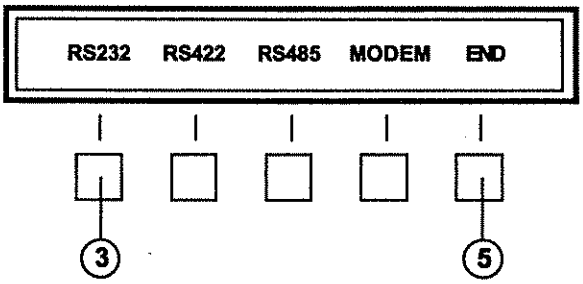

Figure 3.3.7.3 Port Conditioning Menu.

To select 'RS232', 'RS422', 'RS485', or 'MODEM' (FSK TONES) depress the feature select key immediately below the format desired. In this case, key **3** to select 'RS232'. The feature display will now appear as shown in Figure 3.3.7.4 and display the established baud rate.

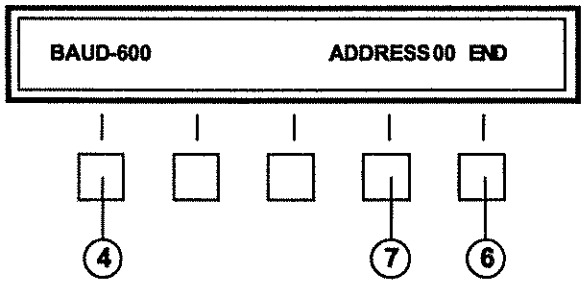

Figure 3.3.7.4 Baud Rate Display.

If a different baud rate is desired than that shown in the display in Figure 3.3.7.4, depress the feature select key **4** and choices will appear on the screen as shown in Figure 3.3.7.5.

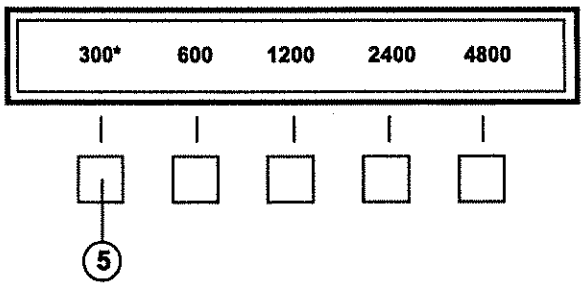

Figure 3.3.7.5 Baud Rate Selection Menu.

Depress the selector key immediately below the desired baud rate, in this case **5** for 300 baud. The feature screen will immediately revert to that shown in Figure 3.3.7.4 and the newly selected baud rate will be displayed.

Once a selection has been made, depression of the 'END' key **6** in Figure 3.3.7.4 will cause the screen to revert to that shown in Figure 3.3.7.3, and display an asterisk to the right of the selected port.

Once the port has been conditioned, depress the 'END' key **5** , shown in Figure 3.3.7.3 and the feature menu will revert to that shown in Figure 3.3.7.2.

3.3.8 ADDRESS

To permit the T-9400 to be controlled by a remote unit (such as the RPC-9286D) equipment address must be established.

With the feature menu as shown in Figure 3.3.7.4, depress 'ADDRESS 00' key to select 'ADDRESS'. The feature display will now appear as shown in Figure 3.3.8.1.

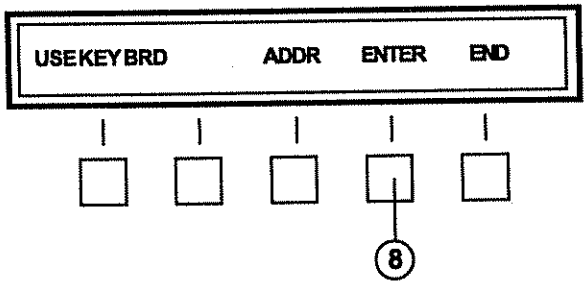

Figure 3.3.8.1 Address Display.

Depress the appropriate two (2) digit address on numeric key pad. Address XX will appear in feature display. Depress 'ENTER', key **8** to enter this address. Display reverts to Figure 3.3.7.4 and displays new address. Depress 'END' key **6** , display reverts to Figure 3.3.7.3. Depress 'END' key **5** to go to other menus.

NOTE: See remote control unit manual for further instructions.

3.3.9 'CW' KEY OPTIONS

In order to invoke access to the proper feature menu, the T-9400 must first be put in the 'CW' mode of operation. This may be done by successively depressing the 'MODE' key until the 'CW' mode is displayed on the Function/ Status screen. Once the 'CW' mode has been selected, the feature menu will appear as shown in Figure 3.3.9.1.

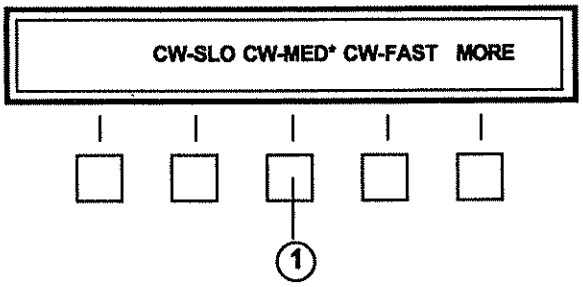

Figure 3.3.9.1 Feature Menu for Selection of 'CW' Options.

The CW key break time is normally set at 'CW-MED' (CW-Medium) **1** when the equipment is shipped from the factory. This setting will accommodate normal keying speeds of 10 to 20 wpm (words per minute). If a setting other than this is desired, it may be selected by depressing the key immediately below 'CW-SLO' (CW-Slow) for under 10 wpm or 'CW-FAST' for over 20 wpm. Note that the asterisk (*) on the screen shown in the figure will move next to the speed selected.

3.3.10 LINE AUDIO SELECTION

The audio input connector at the rear of the T-9400 provides for two (2) sets of 600 OHM input lines for each sideband audio (LSB-A&B, USB-C&D) to permit utilization of more than one external audio applique unit. Selection of either external applique may be made from the front panel by depressing the feature menu 'MORE' key **1** until the screen indicated in Figure 3.3.10.1 appears.

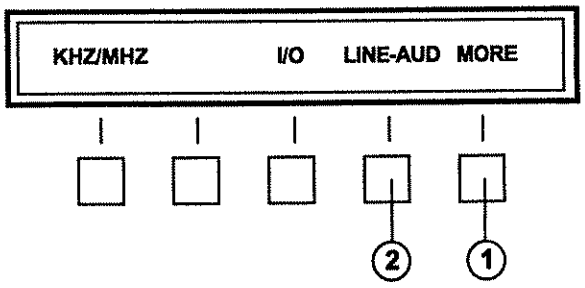

Figure 3.3.10.1 Feature Display of Port Selection Menu.

Depress the 'LINE-AUD' feature key **2** to bring up the line audio selection menu shown in Figure 3.3.10.2.

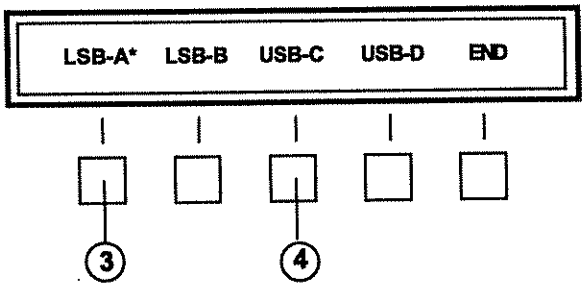

Figure 3.3.10.2 Line Audio Selection Menu.

Depressing of feature key **3** will connect the applique unit on line A to the Lower Sideband channel of the radio. Similarly depression of feature key **4** will connect the applique unit on line C to the Upper Sideband channel of the radio. The asterisk (*) will move next to the line that has been selected.

NOTE: Only one external applique unit may be connected at a time for each sideband channel. If only one applique is to be utilized it should be connected to line audio 'A' or 'C'.

Modem line selection for Lower Sideband/Upper Sideband (B&D) is accomplished in a like manner with appropriate feature keys.

3.3.11 TRANSMIT GAIN CONTROL (TGC SETUP)

The T-9400 is equipped with Transmit Gain Control (TGC) to insure optimum power output for each of the ISB sideband channels. Periodically, as the system is re-configured or at the time of initial start-up, such setup may be effected as follows.

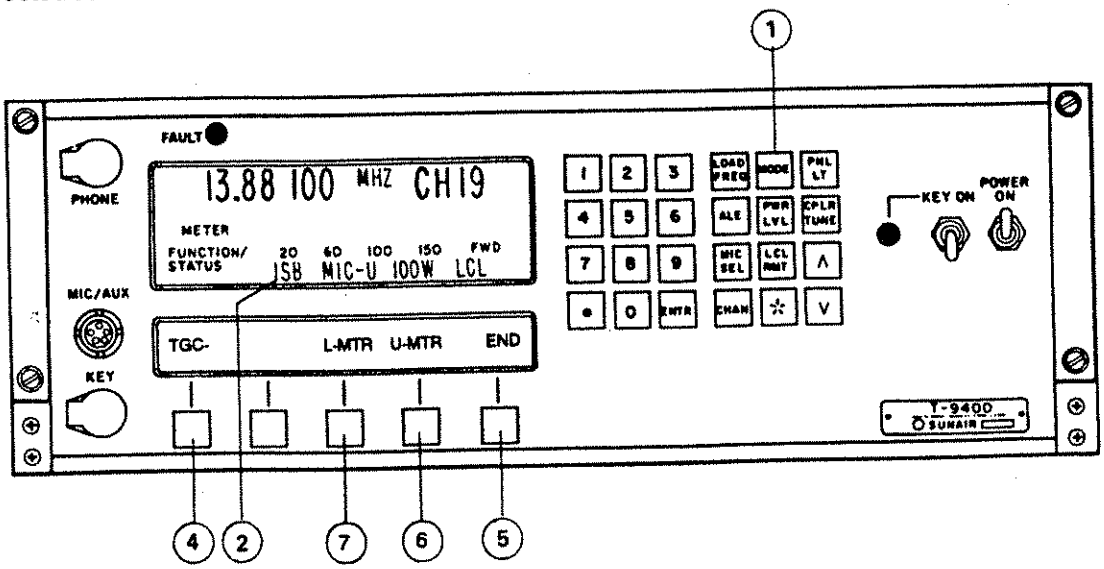

Figure 3.3.11.1 Transmit Gain Control Setup.

Referencing Figure 3.3.11.1, depress the 'MODE' key **1** successively until 'ISB' appears in the display screen at **2** . The Feature Menu indicated by **3** will automatically appear. Depression of the 'TGC' key **4** will cause the exciter to automatically key and adjust ISB Transmitter Gain. While this process is occurring, the message:

'TGC SETUP'

will appear on the function display screen. When successfully adjusted, the message will disappear. The feature menu may be exited by depression of the 'END' key **5** .

3.3.12 ISB MODE - LSB LINE OR USB LINE METER SELECTION

The T-9400 can be set up in the ISB mode of operation to monitor either the LSB 600 Ohm line input or the USB 600 Ohm line input on the 'Operational' display. With the 'Feature' display as shown in Figure 3.3.11.1 depression of feature key **6** or **7** will select the meter function, and an asterisk (*) will move next to the meter function selected. Depress the 'END' key **5** and the 'Feature' display will appear as shown in Figure 3.3.12.1.

3.4.1.5 RADIO SECURITY

The T-9400 exciter can be equipped with a security feature which, when invoked, will prevent unauthorized personnel from either viewing radio settings (by blanking the operational display) or changing any radio setting (by disabling the front panel controls).

For further information, contact Sunair.

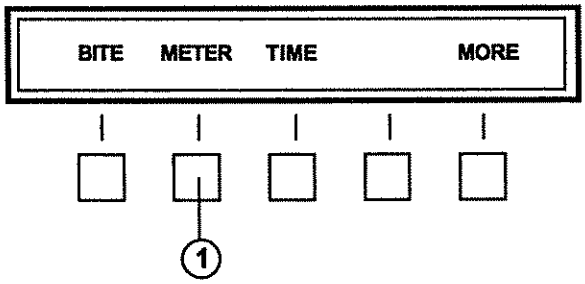

Figure 3.3.12.1 Feature Menu Display Screen.

Depress the 'METER' key **1** and the feature select screen will appear as shown in Figure 3.3.12.2.

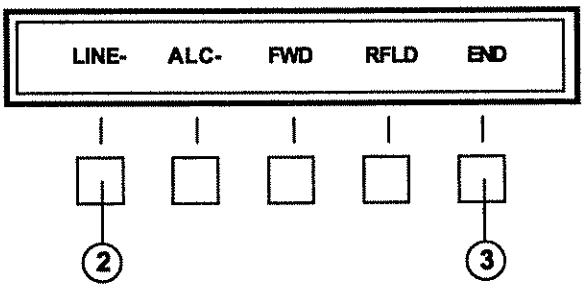

Figure 3.3.12.2 Meter Function Select Display.

Depress the 'LINE' key **2** and the asterisk (*) will move to the meter entry selected and displayed on the 'Operational' display. Depress 'END', key **3** to use other menus.

3.4 ADVANCED OPERATIONS

This section addresses those features and functions that are specialized, or invoke some of the unique features of the T-9400.

3.4.1 OPTIONS

If the T-9400 Exciter has any of the available options installed see applicable section(s) for the operation procedures.

3.4.1.1 OVEN

When the optional High Stability Reference Oscillator (P/N 5024013701) is installed the function status display may read:

'OVEN WARM UP'

for up to several minutes, when the T-9400 is turned 'ON', until the reference oscillator is stabilized.

3.4.1.2 LSB DATA FILTER

Depress 'MORE', key **1** until feature display is as shown in Figure 3.4.1.2.1.

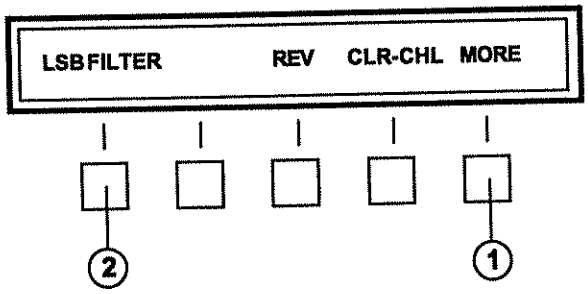

Figure 3.4.1.2.1 Feature Display for 'LSB FILTER' Selection.

Depress 'LSB FILTER', key **2** . The feature display will now appear as shown in Figure 3.4.1.2.2.

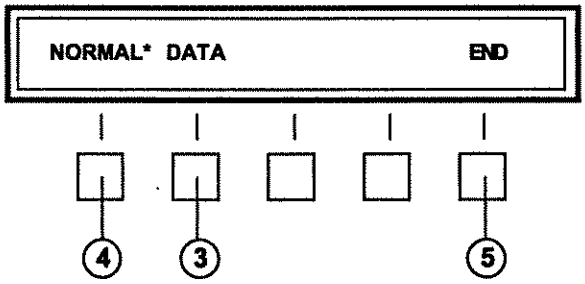

Figure 3.4.1.2.2 Feature Display for LSB Filter Mode Selection.

Depressing 'DATA', key **3** will cause the asterisk (*) to move to 'DATA' for data transmission. Depressing 'NORMAL', key **4** will cause the asterisk (*) to move to 'NORMAL' for voice transmission. Upon mode selection, depress 'END' key **5** to return to Figure 3.4.1.2.1; depress 'MORE' key **1** to bring up other menus.

3.4.1.3 USB DATA FILTER

Depress 'MORE' key **1** until feature display is as shown in Figure 3.4.1.3.1. Depress 'USB FILTER', key **2** .

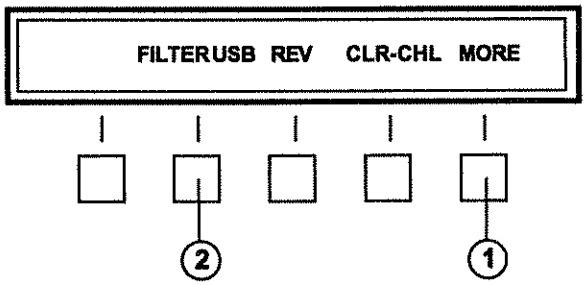

Figure 3.4.1.3.1 Feature Display for USB Filter Selection.

Feature display will appear as shown in Figure 3.4.1.3.2.

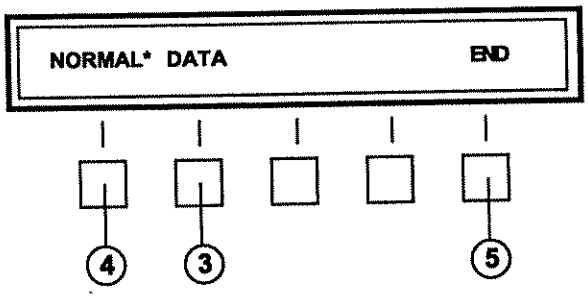

Figure 3.4.1.3.2 Feature Display for USB Filter Mode Selection.

Depressing 'DATA' key **3** will cause the asterisk (*) to move to 'DATA' for data transmission. Depressing 'NORMAL', key **4** will cause the asterisk (*) to move to 'NORMAL' for voice transmission. Upon mode selection, depress 'END' key **5** to return to Figure 3.4.1.3.1; depress 'MORE' key **1** to bring up other menus.

3.4.1.4 POST-SELECTOR

Depress 'MORE' key **1** until feature display is as shown in Figure 3.4.1.4.1.

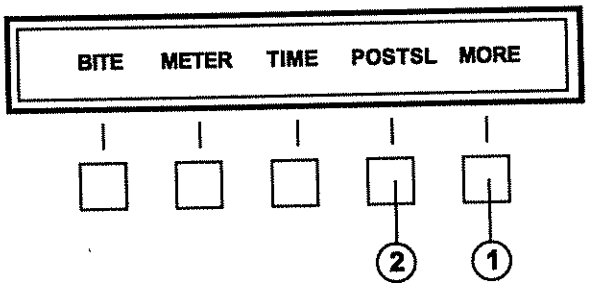

Figure 3.4.1.4.1 Feature Display for 'POST-SELECTOR' Selection.

Depress 'POSTSL' key **2** . An asterisk (*) will appear behind 'POSTSL*', indicating you have selected the optional external post-selector to be used with the T-9400.

THIS PAGE INTENTIONALLY LEFT BLANK.

SECTION IV

THEORY OF OPERATION

4.1 GENERAL

The theory of operation of the T-9400 Exciter is presented in eight (8) parts:

(1) Front Panel Module.
(2) Microprocessor Assembly.
(3) Synthesizer Assembly.
(4) Exciter Module.
(5) Filter Module.
(6) Select/Distribution Reference.
(7) Power Amplifier Module.
(8) DC and AC Power Assemblies.

Figure 4.1.1 is the overall block diagram of the T-9400 Exciter referred to in the discussion.

4.2 NON-SIGNAL CIRCUIT SECTION

4.2.1 FRONT PANEL ASSEMBLY 1A1

The Front Panel Assembly contains the circuitry necessary to provide analog and control interfacing with appropriate sub-assemblies. It also provides and accepts digital information through the exciter control/data bus, via the microprocessor assembly, with the various other assemblies. A wide screen Liquid Crystal Display (LCD) indicates operating status such as frequency, channel, mode, MIC, RF power level and local/remote control as selected by front panel keypad. The LCD contains a bar graph display which can selectively indicate transmit forward/reflected power, and 600 Ohm transmit audio levels. The exciter's Built-In-Test Equipment (BITE) circuitry monitors status of all exciter plug-in assemblies as well as external LPA-9600 Solid State Kilowatt Amplifier and CU-9100 (1000 Watt) or CU-9125 (125 Watt) Digital Antenna Coupler equipment. Plain language messages are displayed on the LCD, providing assurance of continuing functionality of the T-9400 Exciter or HF system. Selecting the exciter BITE function, exercises a comprehensive test routine (contained in the microprocessor software) which checks all plug-in sub-assemblies to the Lowest Repairable Unit (LRU). Should a fault be detected, the 'FAULT' Light Emitting Diode (LED) in the upper left hand corner will illuminate and the LCD will display what LRU(s) is (are) inoperative. A Soft Key Menu LCD located directly below the primary LCD permit the selection of enhanced functions not found on the keyboard entry keypad, such as BITE, Time-of-Day, etc... The soft keys also provide access to remote control configuration, meter selections and remote audio.

4.2.2 MICROPROCESSOR ASSEMBLY 1A2A1

4.2.2.1 GENERAL

The Microprocessor Assembly provides overall control of the T-9400 functions. It enables most Front Panel controls, status indications, and storage or operation on any frequency. By means of external interfacing, it also controls the LPA-9600 Solid State Kilowatt Amplifier and CU-9100 (1000 watt) or CU-9125 (125 watt) Digital Antenna Couplers. The information exhibited on the Front Panel LCD is furnished by the Microprocessor Assembly. It has complete control of all frequency information routed to the Synthesizer Assembly 1A2A2 via Control/Data Bus. The Microprocessor Assembly acquires BITE information from the exciter assemblies via Control/Data Bus. The Microprocessor Assembly via Control/Data Bus selects the proper Band Pass Filter within the Front End Assembly 1A2A5 and the appropriate Low Pass Filter in the Filter Module 1A3. The Microprocessor Assembly is referenced to a 5 MHz standard frequency, by means of the Select/Distribution Amplifier Assembly 1A2A6 for its clock signal.

4.2.2.2 MICROPROCESSOR U2

The Microprocessor Assembly contains the 80C85 (8-bit) microprocessor U2. U2 is the prime control for all of the T-9400's functions. It executes instructions (software) contained in EPROM U13. U2 controls circuits on the Microprocessor Assembly by three busses:

a) AD0 thru AD7, a Multiplexed Address/Data Bus containing either data or address information.

b) A8 thru A15, which always contains address information.

c) The Control/Status bus which contains signals:

RD = READ Control,
WR = WRITE Control,
IO/M = I/O Write, I/O Read, Memory Write or Memory Read,
ALE = Address Latch Enable.

4.2.2.3 ERASABLE PROGRAMMABLE READ ONLY MEMORY (EPROM) U13

The EPROM U13, contains the necessary data bits which make up the program or software which microprocessor U2 uses to control the T-9400 functions.

4.2.2.4 STATIC RANDOM ACCESS MEMORY (SRAM) U3

The SRAM provides an area of temporary storage which U2 uses as a 'scratch pad' during the execution of its program with U13.

4.2.2.5 ELECTRICALLY ERASABLE PROGRAMMABLE READ ONLY MEMORY (EEPROM) U8

Long term storage of the T-9400 functions is handled by the non-volatile memory in U8. The frequency information for each of the 128 channels, mode, power level, etc., is placed in U8 to be used by U2 during the execution of its program with U13. U8 is an 8k X 8 bit CMOS EEPROM in which each byte may be reliably written 10,000 times without degrading device operation. The data in the byte will remain valid after its last write operation for ten (10) years with or without power applied.

4.2.2.6 OPTIONAL SMART WATCH U14(A)

Smart Watch is an optional IC that is piggy backed into U14's (a spare EPROM) socket. It keeps track of hundredths of seconds, seconds, minutes, hours, days, date of the month, months and years. An embedded lithium energy cell maintains watch information whenever the Exciter is turned off. The above information is available to U2 Microprocessor on the Multiplexed Address/Data Bus to be displayed on the Front Panel LCD as Time-of-Day Clock.

4.2.3 OPTOCOUPLER ASSEMBLY 1A2A1A1

The Optocoupler is a sub-assembly containing (PS2401A-4) optically coupled isolators that plug into the Microprocessor Assembly 1A2A1. The Optocoupler assembly electronically isolates the microprocessor busses from the Exciter Control/Data Bus to prevent transfer of Exciter noise to the Microprocessor Assembly or the transfer of Microprocessor Bus noise to Exciter circuits.

4.2.4 SYNTHESIZER ASSEMBLY 1A2A2

The Synthesizer Assembly consists of one (1) printed circuit motherboard (1A2A2A5) and four (4) plug in assemblies: 1A2A2A1 - First Local Oscillator, 1A2A2A2 - Second Local Oscillator, 1A2A2A3 - Third Local Oscillator/Beat Frequency Oscillator, and the 1A2A2A4 - Reference Loop and Doubler.

4.2.4.1 GENERAL

The Synthesizer Assembly generates the three (3) Local Oscillator (LO) injection frequencies necessary to determine the operating frequency of the T-9400 Exciter. The synthesizer input is a 5 MHz reference signal from the internal Temperature Controlled Crystal Oscillator (TCXO) or an external reference signal via the 1A2A6 Reference Select/Distribution Amplifier assembly. The three LO injection frequencies are produced from the 5 MHz reference by digital phase lock techniques. The frequency accuracy of the Exciter is therefore, solely determined by the accuracy of the frequency standard employed.

4.2.4.2 THIRD LO/BFO ASSEMBLY 1A2A2A3

The 455 kHz Third LO/BFO reference is produced by a bus controlled Phase-Locked Loop (PLL) operating on a Voltage-Controlled Oscillator (VCO). The output of the (455 kHz) Third LO is used as a carrier generating frequency in transmit.

4.2.4.3 SECOND LO ASSEMBLY 1A2A2A2

The 47.850 MHz Second LO varied +5 kHz in 10 Hz steps by means of two (2) bus controlled PLL VCOs. The Second LO output is used in the 1A2A4 IF/Filter Assembly to convert the 455 kHz First IF frequency to the Second IF frequency of 48.305 MHz.

4.2.4.4 FIRST LO ASSEMBLY 1A2A2A1

The First LO Assembly consists of four (4) individual bus controlled PLL VCOs, covering the frequency range of 48.31 to 78.31 MHz in 1 kHz steps. Only one (1) of the PLL VCOs is activated at any given time, and is determined by HF Transmit Frequency selected, through the microprocessor assembly, via the exciters Controlled Data Bus. The frequency output of the First LO Assembly is given by:

F1 = 48.305 MHz + F0 MHz

where F1 = First LO output frequency
F0 = Selected T-9400 operating frequency (i.e. 1.60000 MHz).

Example: 48.305 MHz + 1.60000 MHz = 49.905 MHz.

The First LO frequency is used in the 1A2A5 Front End Assembly to down convert the transmit Second IF of 48.305 MHz to the final desired RF output frequency.

4.2.4.5 REFERENCE LOOP AND DOUBLER ASSEMBLY 1A2A2A4

The Reference Loop and Doubler Assembly consists of a Reference Frequency Divider, a PLL controlled 40 MHz Crystal Oscillator, and a Frequency Doubler Circuit that produce the 1 MHz and 40 MHz outputs used by the Third LO Assembly and the 40 MHz and 80 MHz used by the Second LO Assembly in synthesizing their outputs.

4.3 SIGNAL SECTION

This section of the T-9400 is found on three (3) modules:

(1) The Power Amplifier module - 1A4.

(2) The Filter Module - 1A3, containing:
1A3A1 - RF Detector Assembly.
1A3A2 - Filter Assembly Bands 1 thru 4.
1A3A3 - Filter Assembly Bands 5 thru 8.

(3) The Exciter Module - 1A2, containing:
1A2A3 - Audio Assembly.
1A2A4 - I.F. Assembly.
1A2A5 - Front End Assembly.

These three assemblies are interconnected by means of the 1A2A7 Exciter Motherboard.

4.3.1 GENERAL SIGNAL FLOW

Input to the exciter is available from three sources:

a) Microphone.
b) 600 Ohm balanced lines.
c) CW key.

The microphone input signal from the 1A1 Front Panel is routed to the 1A2A3 Audio Assembly where it is amplified and electronically switched to the microphone/600 Ohm audio circuits. This microphone output is level controlled by an internal adjustment. The output may be fed thru the Transmit Audio Compressor circuitry or switched to bypass these circuits. The microphone audio amplified switched to the transmit audio amplifier thus providing the transmit audio at the proper level. The 600 Ohm balanced audio input is level controlled by an internal adjustment then buffered and electronically switched thru the microphone/600 Ohm audio switch circuits. This audio can also be internally switched thru the Transmit Audio Compressor circuits or switched to bypass these circuits. The audio signal then follows the same path as the microphone and is signal.

Keying the exciter through the CW key, enables the CW sidetone switch. The CW tone is buffered and coupled to the transmit audio buffer U9B. A second buffer and internal level control provides sidetone to the front panel phone jack. The transmit audio from either of the three sources is supplied to the audio buffer on the 1A2A4 IF/ Filter Assembly. This audio is applied to the balanced modulator along with 455 kHz from the Third Local Oscillator. The balanced modulator suppresses the carrier and produces two outputs:

a) 455 kHz plus the audio frequencies (Upper Sideband, USB).
b) 455 kHz minus the audio frequencies (Lower Sideband, LSB).

Hence, the output of the balanced modulator is Double Sideband Suppressed Carrier, DSBSC. After amplification, the DSBSC signal is diode gated into the USB Filter, LSB Filter, or the optional Data Filter as selected via controls from 1A2A1 Microprocessor Assembly. AM operation is, in reality Carrier plus USB only, so the AM Filter is not used in transmit. The appropriate sideband filter eliminates the unwanted sideband and the output is fed thru another diode gate into the mixer preamplifier. At this point if the AM mode of operation has been selected, the AM carrier (455 kHz) is injected into the mixer preamplifier. The balanced mixer, mixes the SSB signal and the selected Second LO frequency of 47.845 thru 47.855 MHz and produces the desired transmit Second IF of 48.305 MHz and the unwanted mixer products. These frequencies are amplified in a fixed gain Monolithic Amplifier and routed thru the narrowband 48.305 MHz Crystal Filter to remove the unwanted mixer products. The output of 48.305 MHz is amplified in another fixed gain Second IF Monolithic Amplifier. The amplified signal is passed thru the VHF Transmit Gain Control circuit to a fixed gain transmit Second IF amplifier and then routed to the 1A2A5 Front End Assembly.

The VHF transmit gain control circuit is internally adjusted for static operation. During dynamic operation this circuit is electronically controlled by the Automatic Level Control/Automatic Carrier Control (ALC/ACC) circuits. The ALC/ACC sample the forward and reflected power in the 1A3 Filter Module and produce the voltages to control the gain of the transmit Second IF output signal. When the T-9400 is used with the external LPA-9600 the ALC and ACC voltages from the LPA-9600 are also sampled in the ALC/ACC control circuits to control the gain of the transmit Second IF output signal. The 48.305 MHz transmit Second IF is brought into the 1A2A5 Front End Assembly thru the ALC current circuit into the mixer. The mixer mixes the 48.305 MHz and the selected First LO frequency 48.31 to 78.31 MHz to provide the desired frequency output between 1.6 and 30 MHz. The mixer output is Low Pass filtered to remove undesired mixer products and the output is amplified in predrivers Q11, Q12, and Q13. The RF signal is again amplified in Drivers Q9 and Q10 to a level of 0.5 watts PEP. The RF signal is then band pass filtered in one of eight filters and routed to the 1A4, Power Amplifier Module.

The ALC current circuit is controlled by the 1A5 DC Power Supply Module current ALC detector circuit which

monitors the +28 VDC current supplied to the 1A4 Power Amplifier Module. Whenever the power amplifier transistors draw excessive current, this circuit sends a signal to the 1A2A5 ALC (I) circuit causing it to attenuate the Transmit Second IF signal input to the Mixer, reducing the output from the 1A2A5 Front End Assembly and thereby limiting the Power Amplifier transistors current to a safe level.

The 0.5 Watts of transmit RF power is amplified in 1A4 Push-Pull Drivers Q1 and Q2. The amplified RF is transformer coupled into two sets of Push-Pull Power Amplifiers (Q3, Q4, and Q5, Q6) whose output is coupled to an output combiner circuit to produce the normal 125 watt PEP RF output. The PA output is supplied to the 1A3 Filter Module. The filter module consists of 8 half-octave low pass filter bands. The selected filter operates in both receive and transmit. The RF output from the selected filter is routed thru the VHF filter the Forward and Reflected Power Detector circuits and out to the antenna.

The 1A5A1 DC to DC Power Supply Module is the primary power supply, utilized in the T-9400 transceiver. The DC input power is routed to three high-efficiency switching regulators to produce the +5 VDC Digital, +5 VDC Analog, and +12 VDC needed for the operation of the exciter circuits. Each of the IC regulators electronically over voltage protected. Whenever the regulator output voltage exceeds a predetermined level, an electronic circuit senses a fault and grounds the output of that regulator, preventing damage to the transceiver circuits. The +28 VDC applied to the exciter circuits is protected with a fuse and transient protection device. The Current ALC Detector circuit monitors the DC input current applied to the 1A4 Power Amplifier Module. Whenever the PA transistors drain excessive current this circuit will cause the RF output from the 1A2A5 Front End assembly to reduce drive power causing the PA transistors current to return to safe limits. The optional 1A5A2 AC power supply produces a regulated +28 VDC that is applied to the DC to DC Power Supply. In AC line operation, this power supply is of linear design reducing the undesirable effects of Radio Frequency Interference (RFI) and Electromagnetic Radiation Interference (EMI) from the exciter. When both power supplies are installed the T-9400 Exciter accommodates both AC line and DC battery power thru separate connectors. With both AC and DC power connected, the supply will automatically sense AC line reductions or failure and switch to the DC battery back up voltage source.

The 1A2A6 Select/Distribution Reference Amplifier assembly amplifies and TTL conditions the exciter TCXO 5 MHz and routes it to the 1A2A2 Synthesizer and 1A2A2 Microprocessor assemblies. By internal switches the TCXO amplified signal may be connected to the exciter's rear panel to external peripheral equipment. Also an external frequency standard can be applied to the rear panel and switched into the assembly in place of the exciter TCXO.

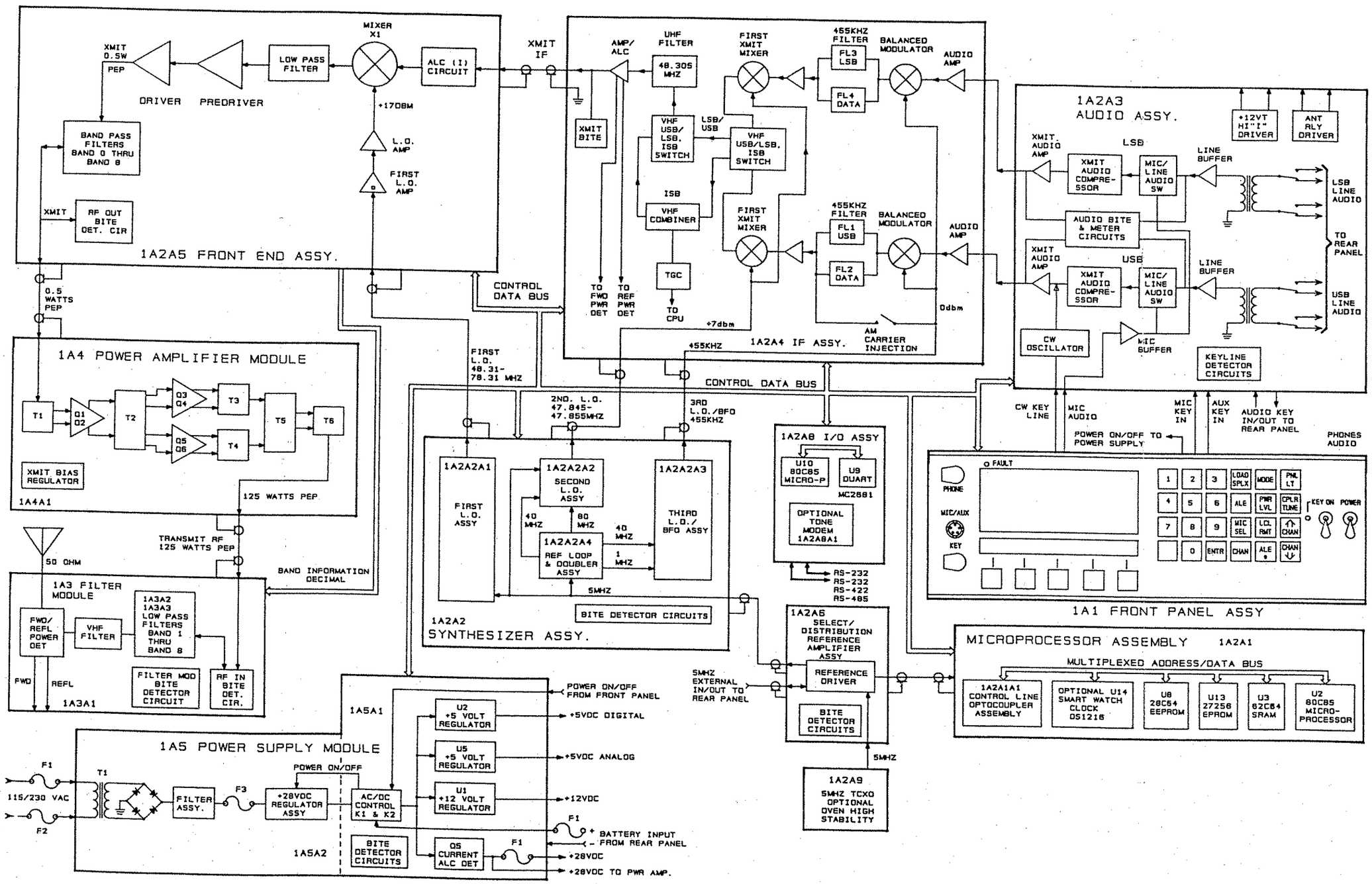

Figure 4.1.1 T-9400 Block Diagram.

THIS PAGE INTENTIONALLY LEFT BLANK

SECTION V

FAULT ISOLATION/MAINTENANCE AND REPAIR

5.1 GENERAL

This section provides the procedures for Fault Isolation, Maintenance and Repair to the Lowest Repairable Unit (LRU) level.

5.2 DISASSEMBLY

Disassembly should be only to the extent necessary to accomplish the repair or replacement of the defective LRU. Procedures for the disassembly of major modules and assemblies are given in the following paragraphs.

5.2.1 TOP OR BOTTOM EXCITER COVER REMOVAL

Refer to Figure 5.2.1.1.

a) Remove the three screws at the rear of the cover.
b) Release cover latches.
c) Pull cover up and back from the front panel (1A1).

5.3 TEST SET-UP

5.3.1 PRELIMINARY

Connect T-9400 and test equipment as shown in Figure 5.3.1.1.

WARNING: For personal safety and to prevent damage to voltage sensitive components in the transceiver, always turn 'OFF' the T-9400 whenever reseating printed circuit cards (PC), LRUs, and when replacing fuses.

5.4 BITE

5.4.1 PRELIMINARY

The 'BITE' of the T-9400 Exciter provides immediate LRU faults. The Surveillance BITE is controlled by the microprocessor on CPU Assembly 1A2A1. It checks the operational status of the LRUs with the exception of the DC to DC Power Supply 1A5A1, AC Power Supply 1A5A2, and the Select/Distribution Reference Amplifier 1A2A6. These LRUs have self-surveillance BITE non-dependent upon CPU Assembly 1A2A1.

The front panel LCD will display a plain language 'FAULT MESSAGE', the 'FAULT' Red LED will illuminate on the Front Panel Figure 5.4.1.5 and on the faulty LRU. (See Figures 5.4.1.1 and 5.4.1.2).

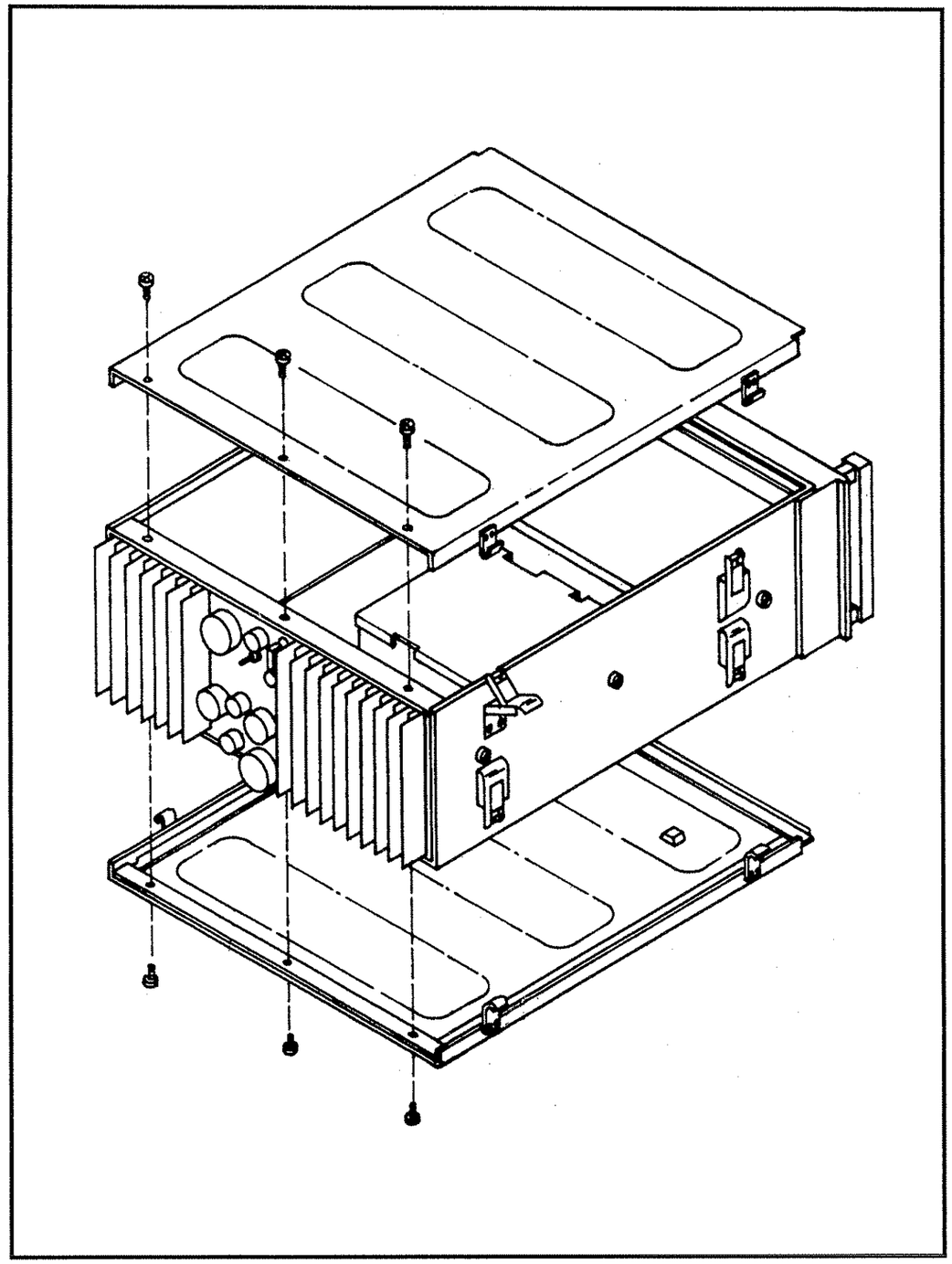

Figure 5.2.1.1 Top or Bottom Exciter Cover Removal.

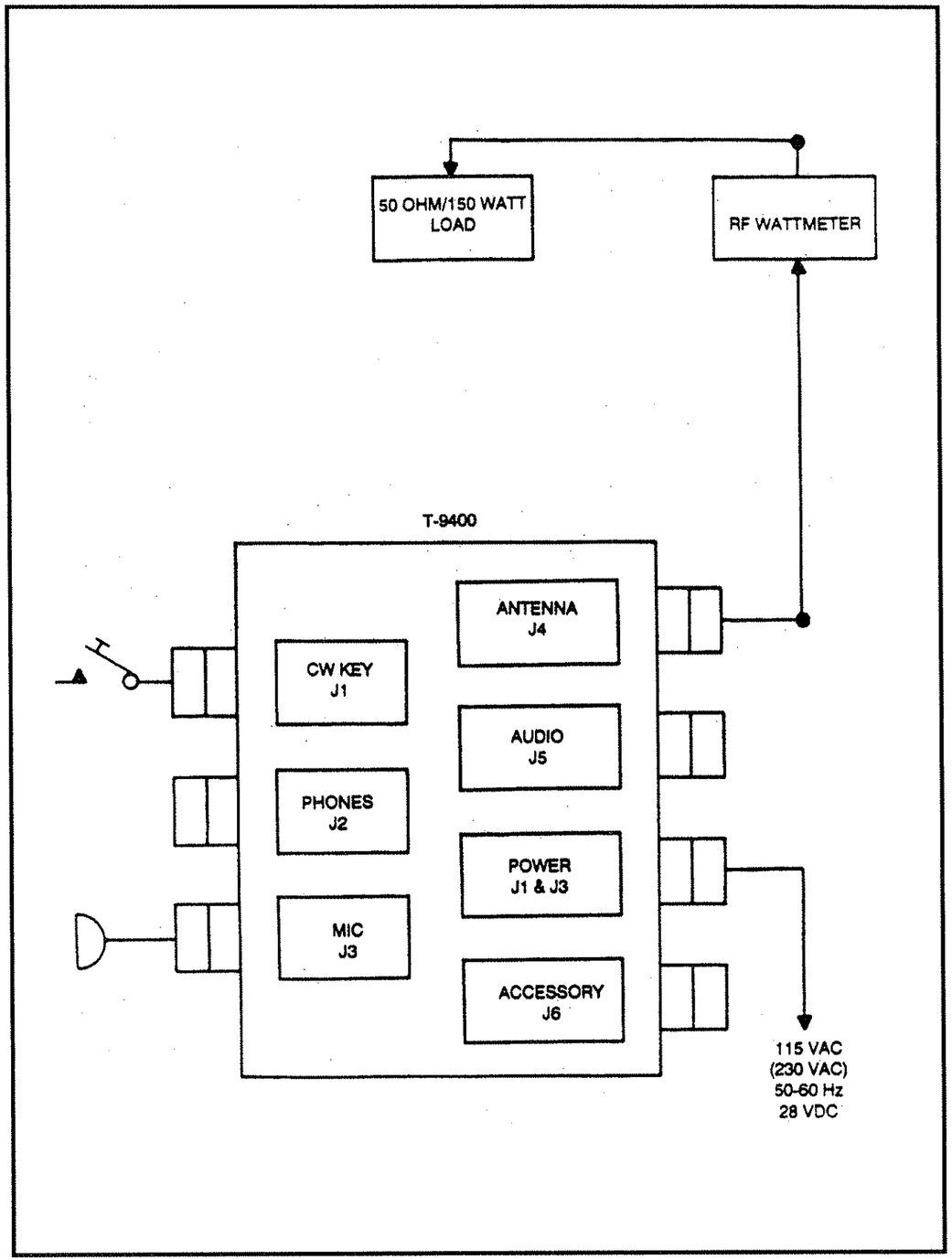

Figure 5.3.1.1 Exciter BITE Test Set-Up.

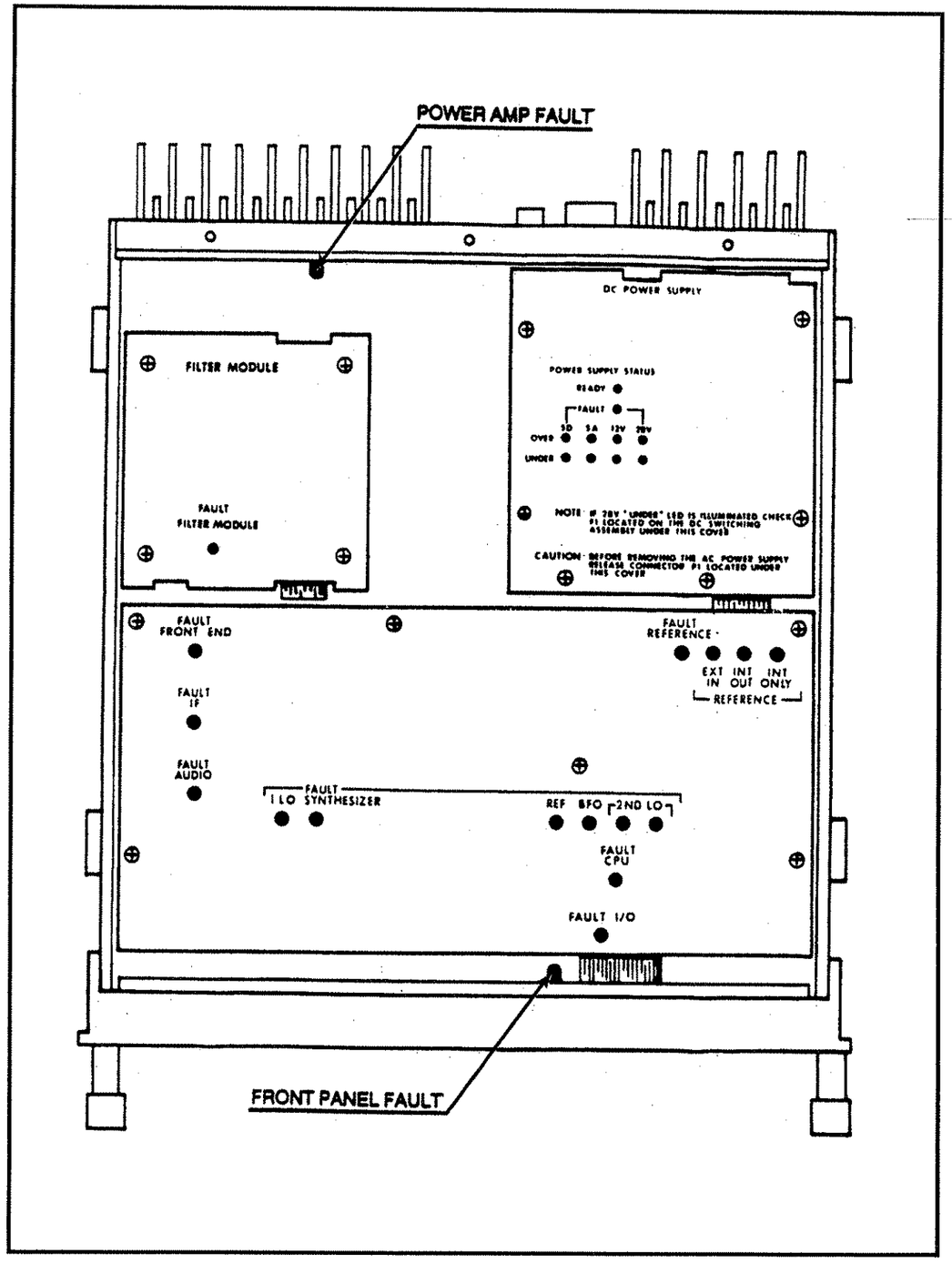

Figure 5.4.1.1 Top View of T-9400 LRU 'Fault Indicators'.

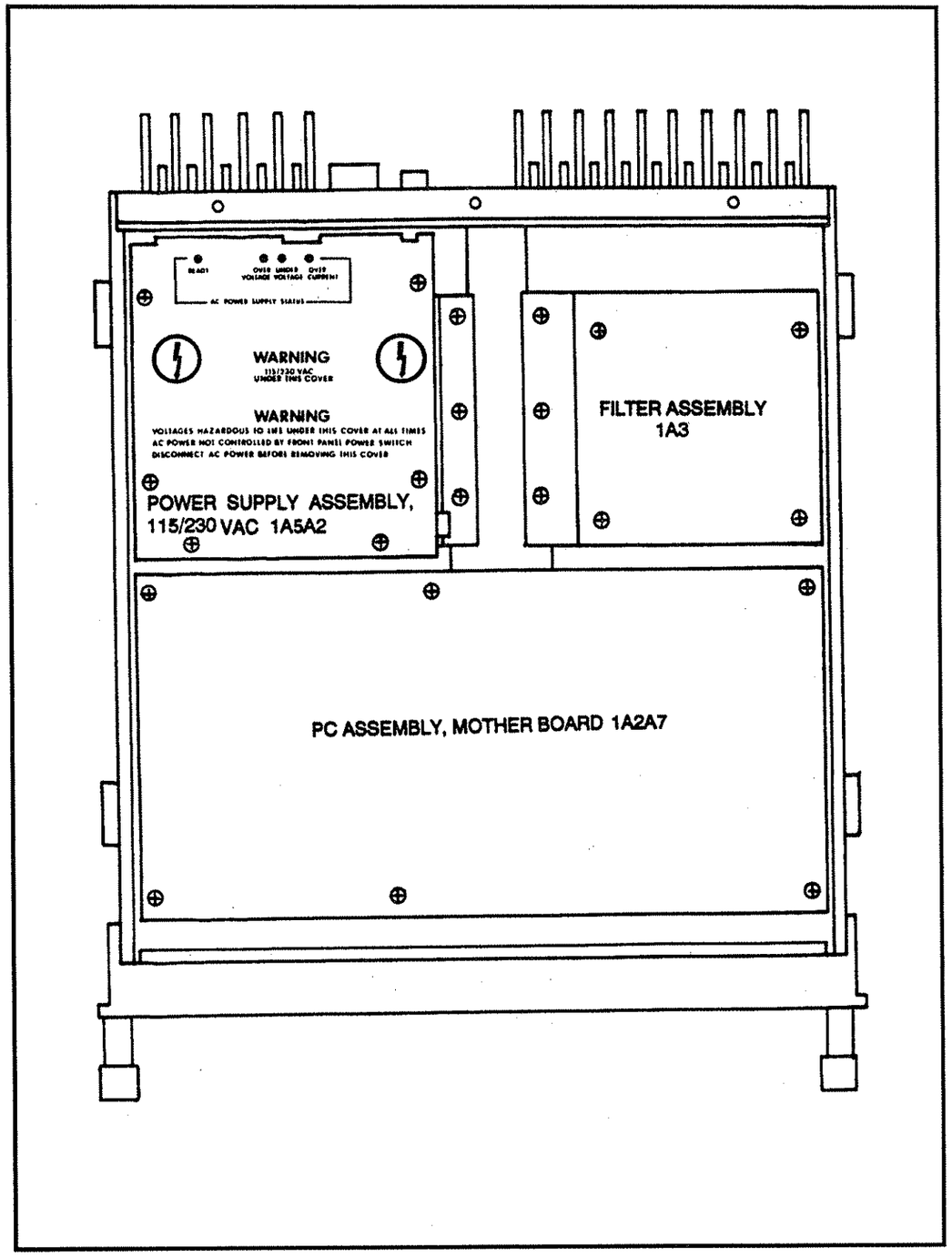

Figure 5.4.1.2 Bottom View of T-9400 AC Power LRU 'Fault Indicators' Location.

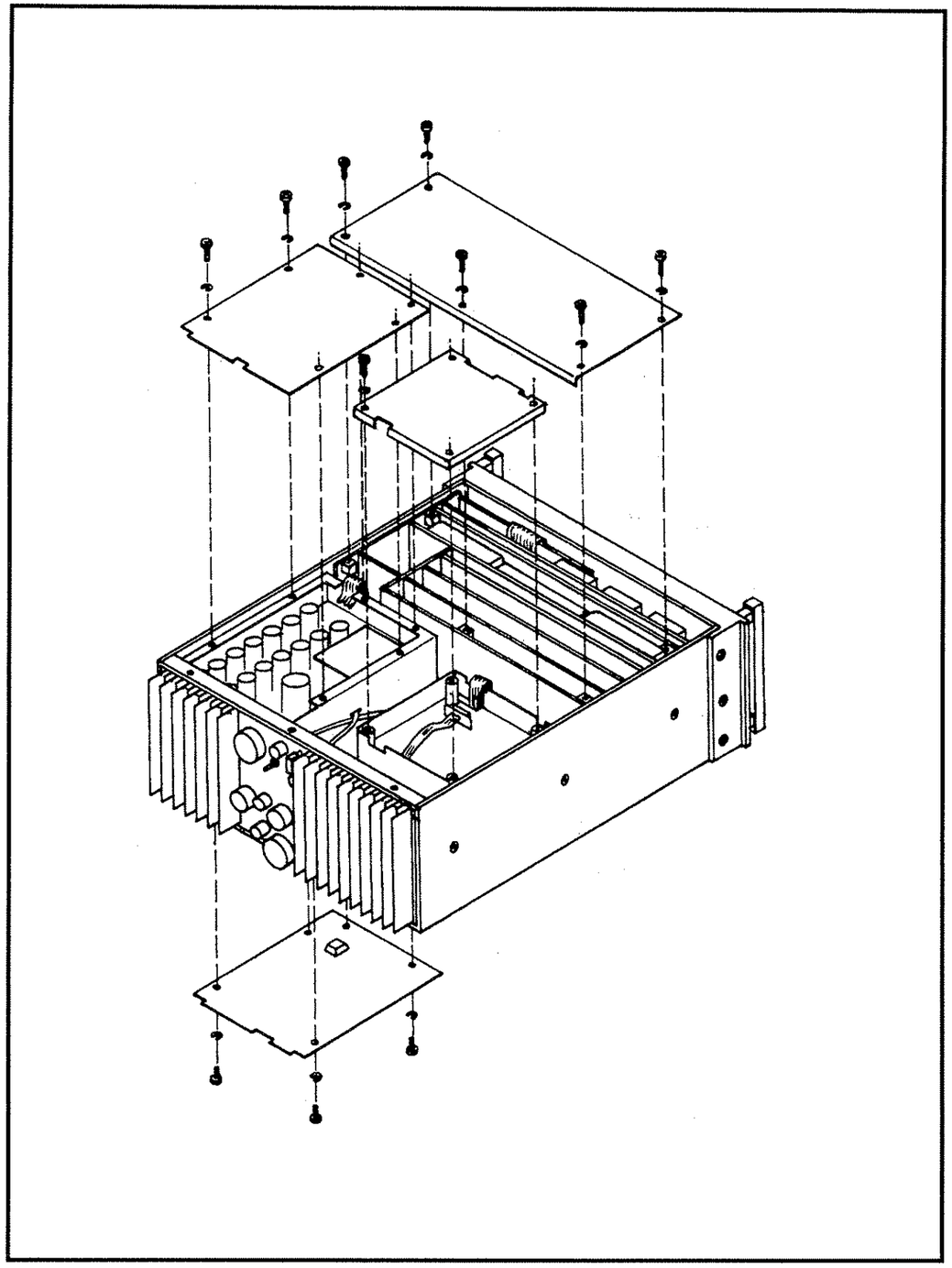

Figure 5.4.1.3 Module Cover Removal.

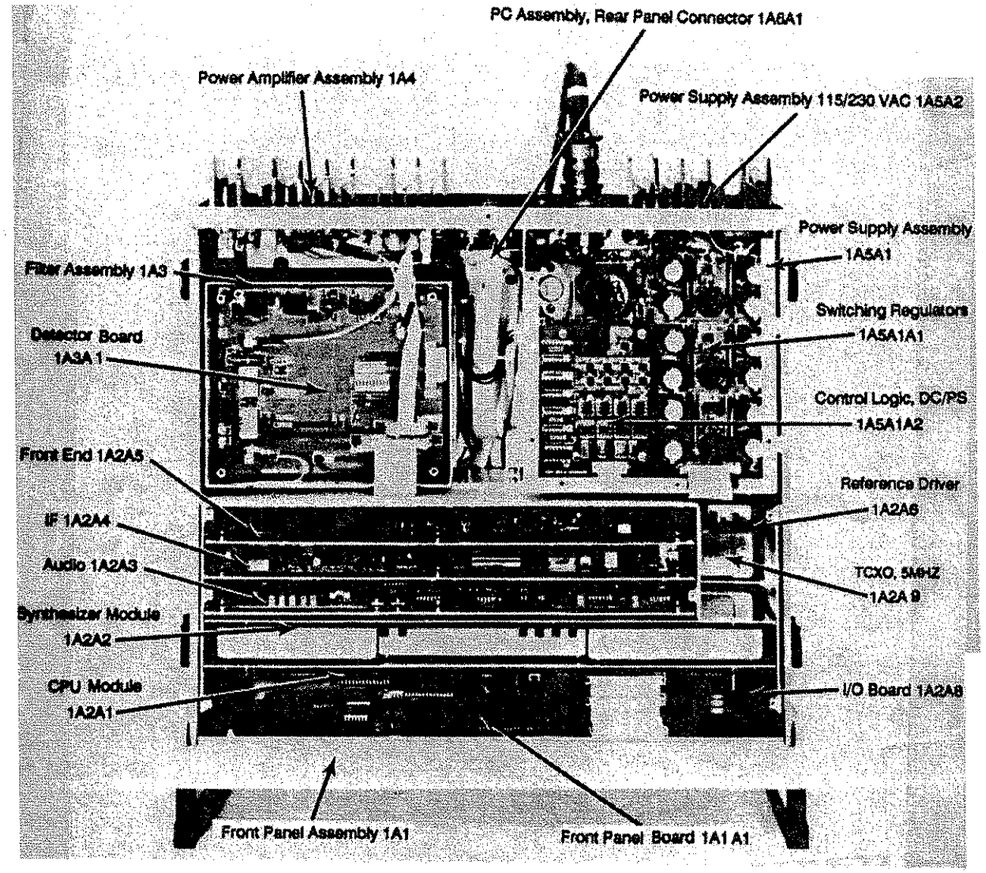

Figure 5.4.1.4 Major Assembly Locations.

With T-9400 Exciter connected as in Figure 5.3.1.1 turn 'ON' the Exciter and perform the following:

NOTE: If the T-9400 you are checking is normally used with a remote control unit and you are bench checking without the remote unit, you MUST TURN OFF the I/O in the T-9400. See Section 3.3.7.

Depress the Feature Menu 'MORE' key **1** successively until the Feature Menu shown in Figure 5.4.1.6 is indicated on the Feature Menu Display **2** .

Depress the 'BITE' key **3** . The equipment will initiate a self test routine of all common modules and will display the results at Function/Status **4** of the Operational Display. The initial message will be:

'BITE IN PROGRESS'.

As each common module is tested a corresponding message will appear briefly on the Operational Display in the following order:

'FRONT PANEL O.K.'	*or*	'FRONT PANEL FAULT'
'CPU O.K.'	*or*	'CPU FAULT'
'SYNTHESIZER O.K.'	*or*	'SYNTHESIZER FAULT'
'POWER SUPPLY O.K.'	*or*	'POWER SUPPLY FAULT'

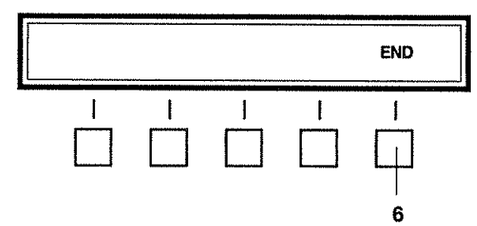

Figure 5.4.1.5 BITE Sub-Menu

Frequency displayed will step through the following test frequencies: 1.75, 2.75, 3.75, 5.75, 7.75, 10.75, 16.75 and 25.75 MHz. Frequency will step back to 1.75 MHz and Operational Display will step through:

'BITE IN PROGRESS'

'AUDIO O.K.'	*or*	'AUDIO FAULT'
'IF O.K.'	*or*	'IF FAULT'
'FRONT END O.K.'	*or*	'FRONT END FAULT'
'POWER AMPL O.K.'	*or*	'POWER AMPL FAULT'
'FILTER MODULE O.K.'	*or*	'FILTER MODULE FAULT'

The filter module is first checked at 1.75 MHz, then is stepped through above test frequencies.

At the conclusion of a valid 'BITE' test, the message:

'TEST COMPLETED'

will appear on the Operational Display. To return to normal operation you must Depress 'END' key **6** See Figure 5.4.1.5.

NOTE: In any of the above tests, if a 'FAULT' **4** and **5** is detected, the test will stop at that particular 'FAULT'. By depressing the 'MORE' key 1, you are able to rerun the 'BITE' again to double-check the fault.

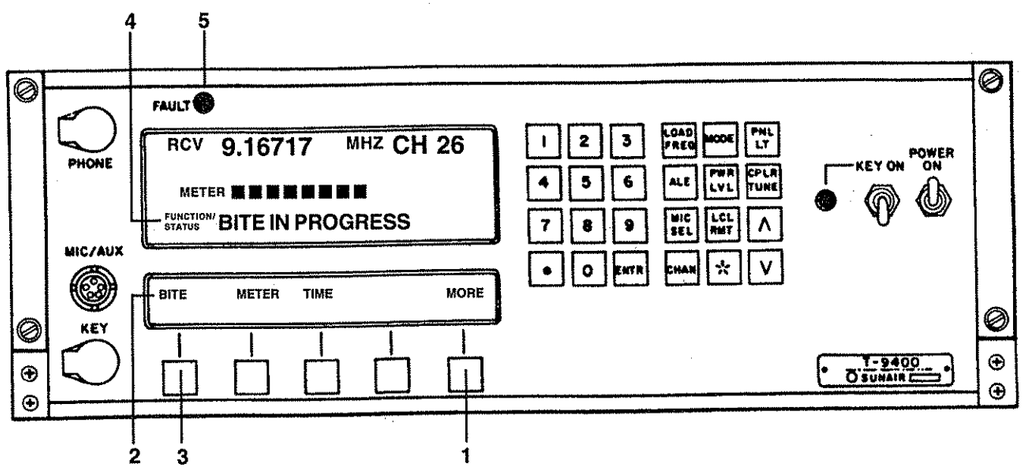

Figure 5.4.1.6 The T-9400's Operational and Feature Menu Displays.

5.4.2 NON SIGNAL PATH MODULES

NOTE: Refer to Figures 5.4.1.3 and 5.4.1.4 for module cover removal and assembly locations.

5.4.2.1 FRONT PANEL FAULT

This is an indication of a failure on the Front Panel PC Board Assembly 1A1A1.

a) Turn Exciter 'OFF' and remove Front Panel Module 1A1. See Figure 5.4.2.1.1.

b) Remove and replace Front Panel PC Board Assembly 1A1A1. See Figure 5.4.2.1.1.

c) Reinstall Front Panel Module 1A1. Turn Exciter 'ON'.

d) Repeat 'BITE TEST'. Upon completion of successful test, return Exciter to operational status and return failed 1A1A1 PC Assembly to factory for repair.

e) If in step d) above, test fails the Front Panel test again, turn 'OFF' Exciter and remove 1A1 Module; replace with original 1A1A1 PC Assembly. Return the failed 1A1 Module to factory for repair.

5.4.2.2 CPU FAULT

This is an indication of a failure on the PC Assembly CPU 1A2A1.

a) Turn the Exciter 'OFF' and remove and replace PC Assembly 1A2A1. See Figures 5.4.1.3, 5.4.1.4, and 5.4.2.2.1 thru 5.4.2.2.2.

b) Turn 'ON' Exciter and repeat 'BITE TEST'. Upon completion of a successful test, return Exciter to operational status.

c) Return failed PC Assembly 1A2A1 to factory for repair.

5.4.2.3 I/O FAULT

This is an indication of a failure on PC Assembly I/O 1A2A8 .

a) Turn the Exciter 'OFF' and remove and replace PC Assembly 1A2A8. See Figures 5.2.1.1, 5.4.2.1.1 and 5.4.2.2.1 thru 5.4.2.4.1.

b) Turn 'ON' Exciter and repeat 'BITE TEST'. Upon completion of a successful test return Exciter to operational status.

c) Return failed PC Assembly 1A2A8 to factory for repair.

5.4.2.4 SYNTHESIZER FAULT

This is an indication of a failure on the Synthesizer Module 1A2A2.

a) Turn the Exciter 'OFF' and remove and replace Module. See Figure 5.4.1.3 and 5.4.1.4.

b) Turn 'ON' Exciter and repeat 'BITE TEST'. Upon completion of a successful test, return Exciter to operational status.

c) Return failed Module 1A2A2 to factory for repair.

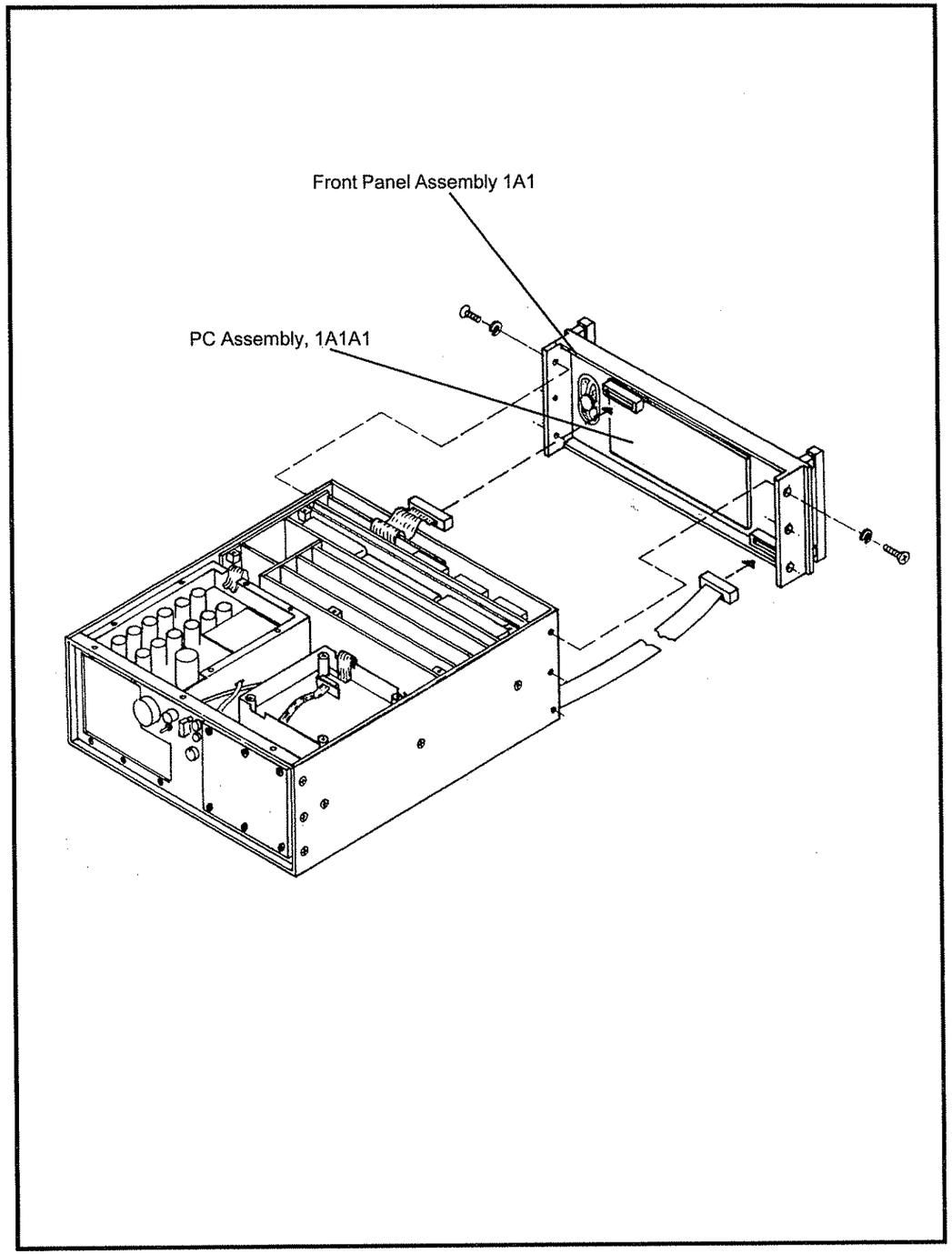

Figure 5.4.2.1.1 Front Panel (1A1) Removal.

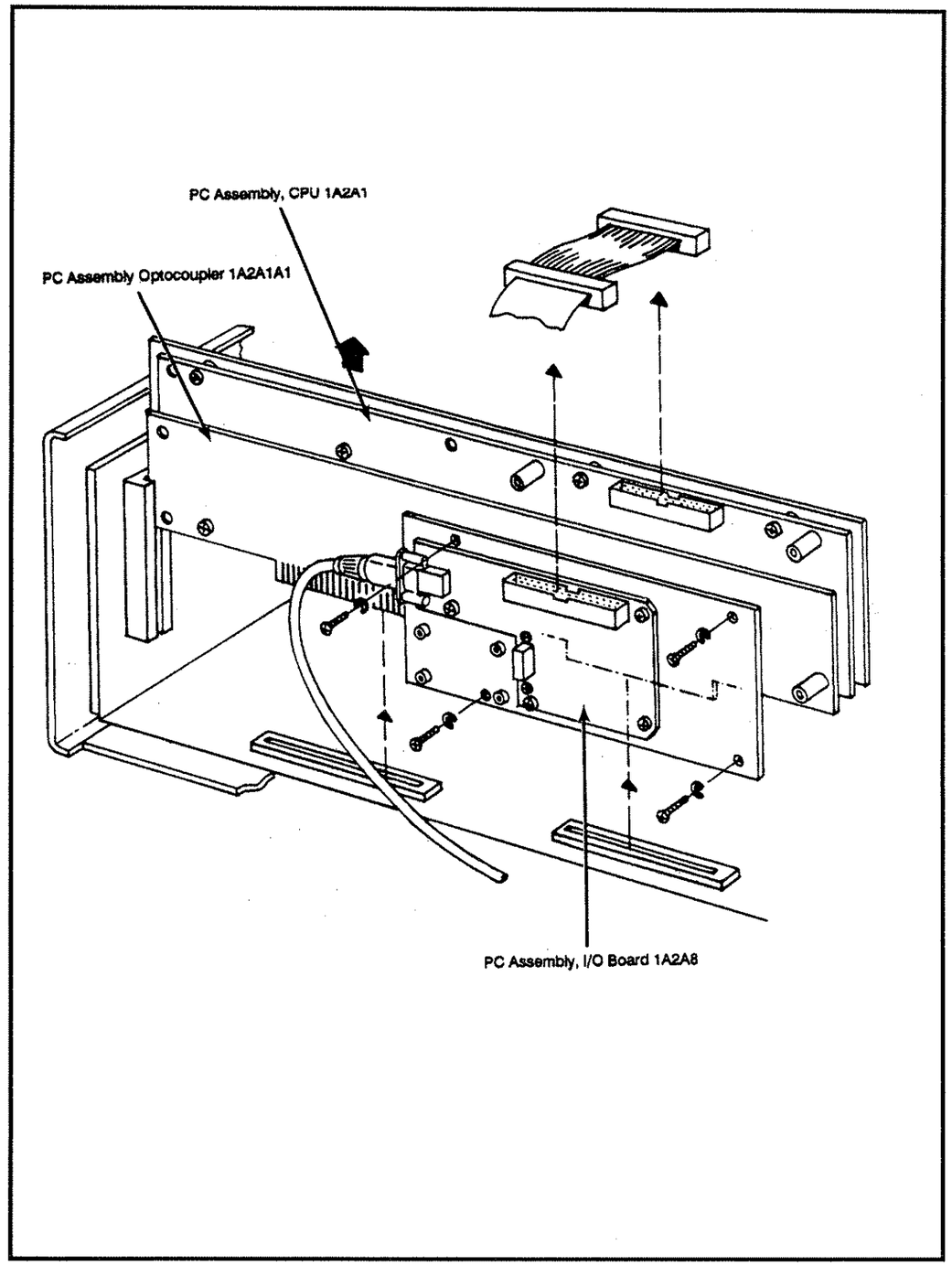

Figure 5.4.2.2.1 Removal/Replacement of CPU 1A2A1 and I/O 1A2A8.

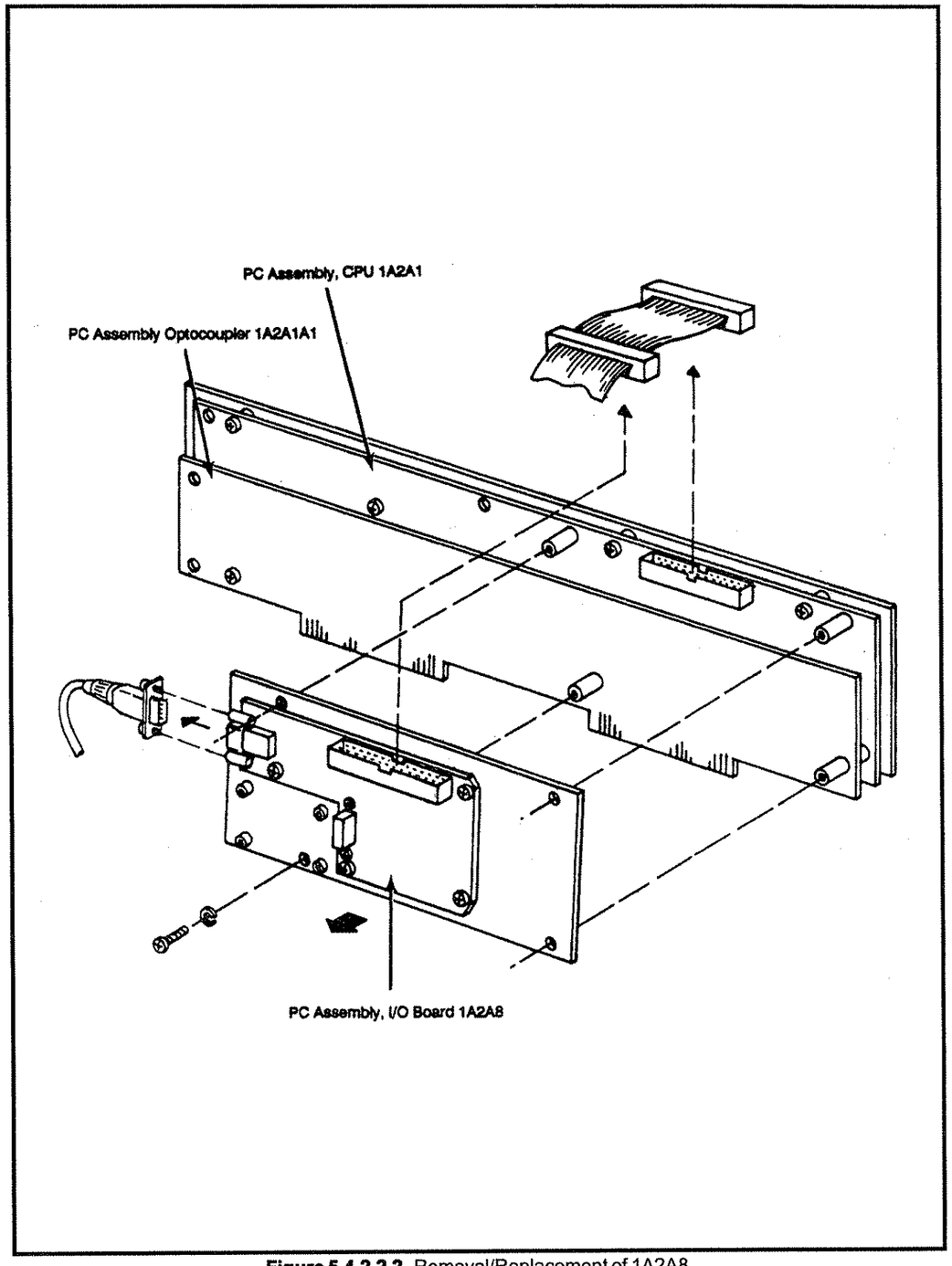

Figure 5.4.2.2.2 Removal/Replacement of 1A2A8.

5.4.2.5 POWER SUPPLY FAULT

This indicates a failure of the 1A5A1A1 +5 VDC analog circuit. The failures are:

a) +5 VDC analog 'OVER' voltage.
b) +5 VDC analog 'UNDER' voltage.

a) +5 VDC analog 'OVER' voltage.

1) Turn 'OFF' Exciter and remove and replace PC Assembly 1A5A1A1 (switching regulator board). See Figures 5.4.1.3, 5.4.1.4, and 5.4.2.4.1 thru 5.4.2.4.4.

2) Turn 'ON' Exciter; observe Power Supply Fault LEDs (should be 'OFF'); run 'BITE TEST'. Upon completion of successful test, return Exciter to operational status. Return PC Assembly 1A5A1A1 to factory for repair. If above power supply LEDs are 'ON', turn 'OFF' Exciter and remove and replace PC Assembly 1A5A1A2 (Control Logic Board). See Figure 5.4.2.4.3.

3) Turn 'ON' Exciter; observe Power Supply Fault LEDs (should be 'OFF'); run 'BITE TEST. Upon completion of successful test, return Exciter to operational status. Return PC Assembly 1A5A1A2 to factory for repair.

b) +5 VDC analog 'UNDER' voltage.

1) Turn 'OFF' Exciter and remove ribbon connector to Filter Module 1A3J4.

2) Turn 'ON' Exciter and observe Power Supply Fault LEDs. If LEDs are 'OFF', a short in the 1A3 Filter Module on the +5 VDC analog line is indicated. Remove and replace 1A3 Module. (See Figure 5.4.2.4.4.) If LEDs are 'ON', trouble in other circuitry is indicated. Turn 'OFF' Exciter and reinstall connector to 1A3J4. Go on to step 3.

3) Remove Front End PC Assembly 1A2A5. Turn 'ON' Exciter and observe Power Supply Fault LEDs. If LEDs are 'OFF', a short in the 1A2A5 +5 VDC analog circuitry is indicated; replace 1A2A5. If LEDs are 'ON', trouble in other circuitry is indicated. Turn 'OFF' Exciter and reinstall 1A2A5. Go on to step 4.

4) Remove IF PC Board Assembly 1A2A4. Turn 'ON' Exciter and observe Power Supply Fault LEDs. If LEDs are 'OFF', a short in the 1A2A4 +5 VDC analog circuitry is indicated; replace 1A2A4. If LEDs are 'ON', trouble in other circuitry is indicated. Turn 'OFF' Exciter and reinstall 1A2A4. Go on to step 5.

5) Remove Audio PC Board Assembly 1A2A3. Turn 'ON' Exciter and observe Power Supply Fault LEDs. If LEDs are 'OFF', a short in the 1A2A3 +5 VDC analog circuitry is indicated; replace 1A2A4. If LEDs are 'ON', trouble in other circuitry is indicated. Turn 'OFF' Exciter and reinstall 1A2A3. Go on to step 6.

6) Remove and replace DC Power Supply Switching Regulator Board 1A5A1A1. Turn 'ON' Exciter and observe Power Supply Fault LEDs. If LEDs are 'OFF', this indicates that 1A5A1A1 should be sent to the factory for repair. If LEDs are 'ON', trouble in other circuitry is indicated. Turn 'OFF' Exciter and go to step 7.

7) Remove and replace Control Logic PC Board Assembly 1A5A1A2. Turn 'ON' Exciter and observe Power Supply Fault LEDs. If LEDs are 'OFF', this indicates that 1A5A1A2 should be sent to the factory for repair. If LEDs are 'ON', trouble could be on Motherboard 1A2A7 or in the interconnecting ribbon cables. Turn Exciter 'OFF' and use normal troubleshooting procedures to locate the short on the +5 VDC line throughout the Exciter.

Other Power Supply Fault LEDs will be discussed in section 5.5.

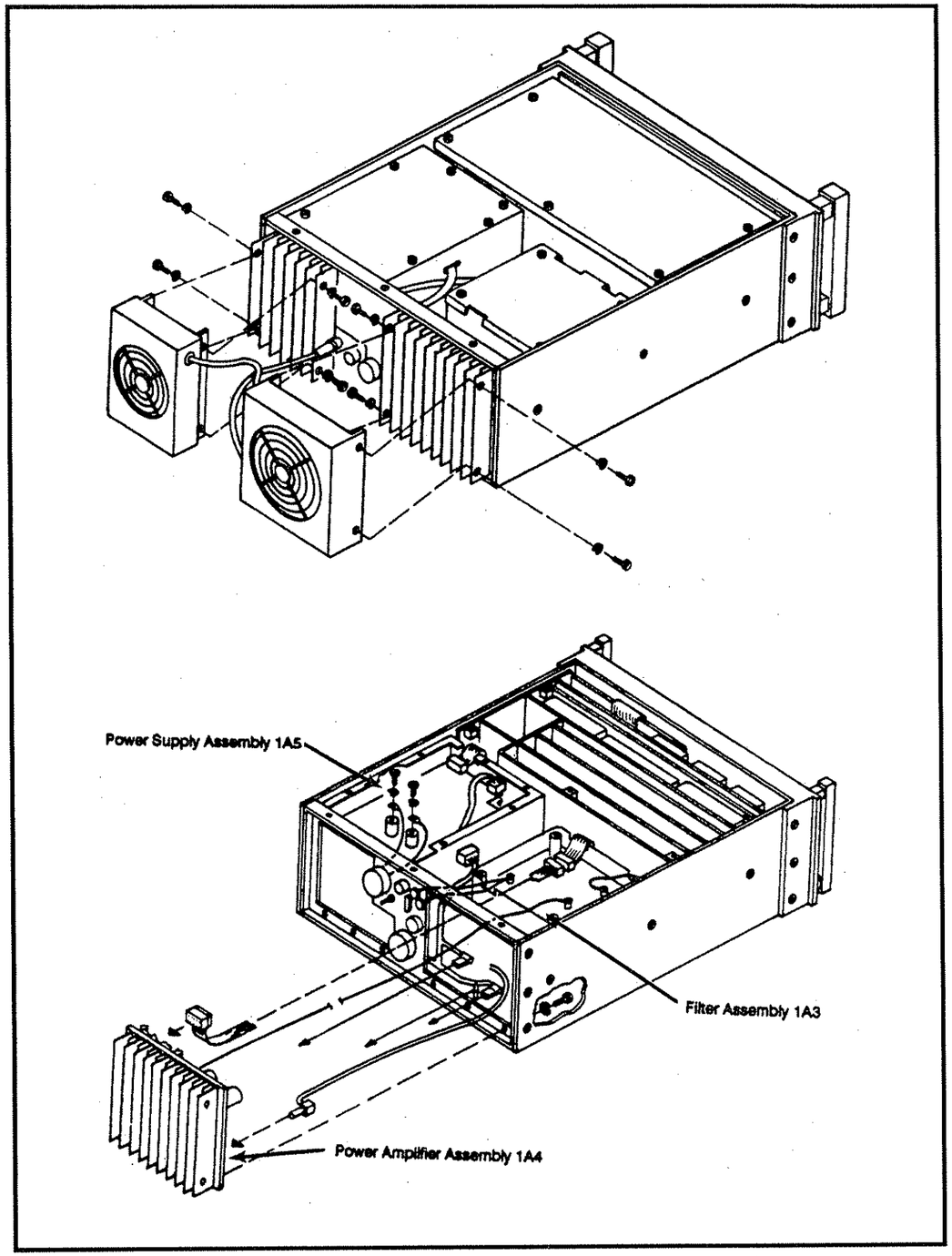

Figure 5.4.2.4.1 Removal/Installation of Modules 1A4, 1A5, and Optional Fans.

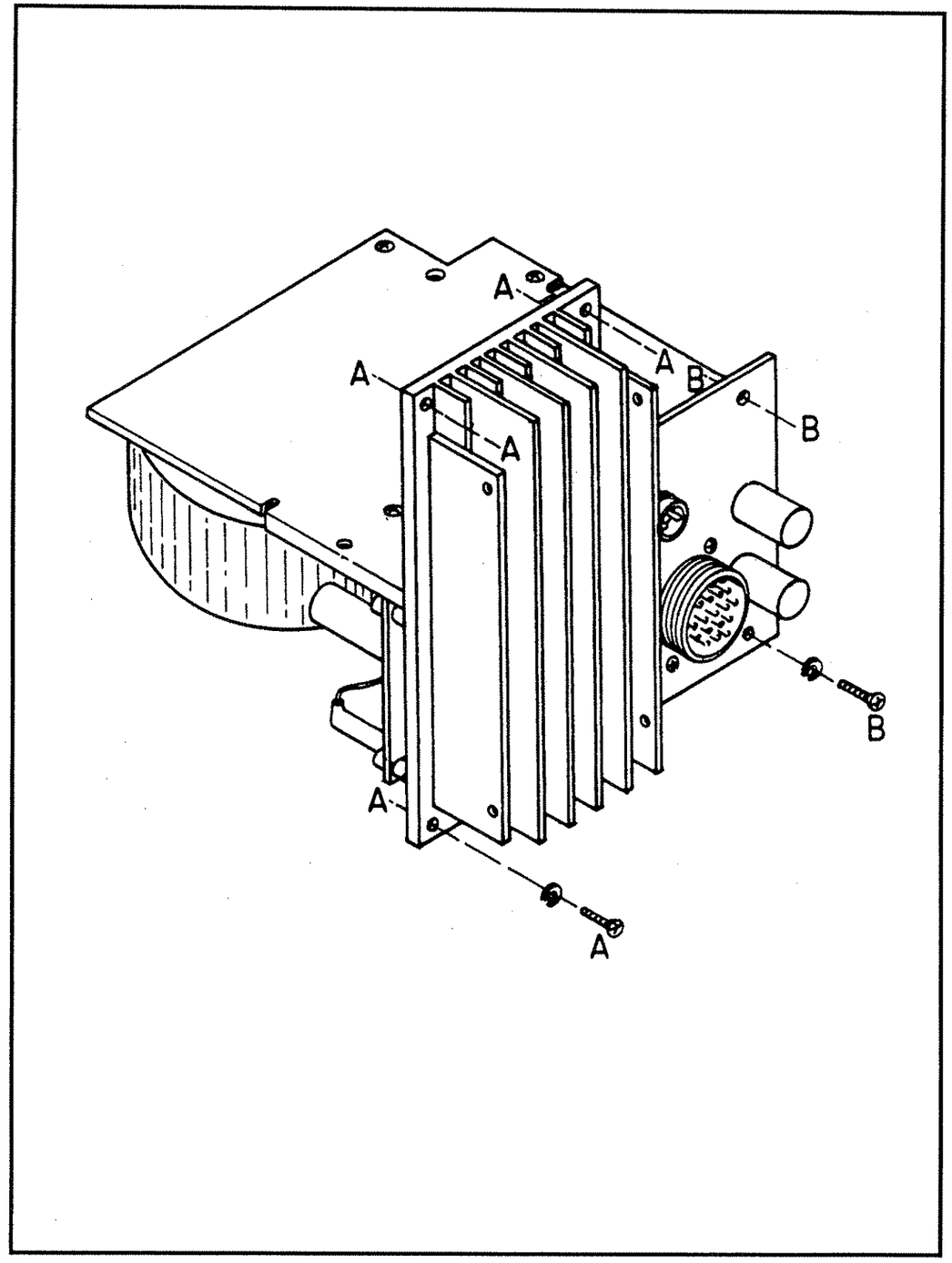

Figure 5.4.2.4.2 Removal/Installation of AC Power Supply Module 1A5A2.

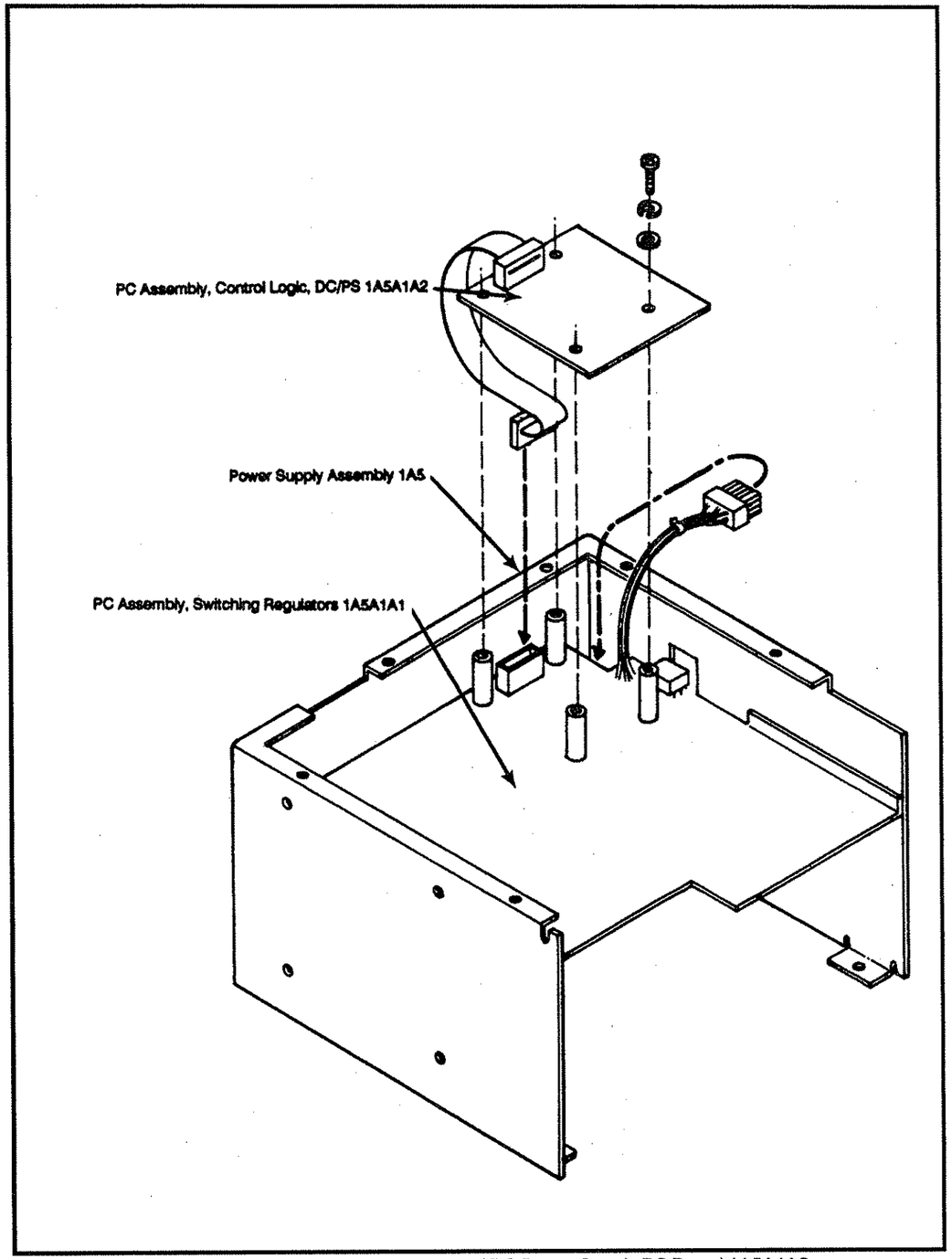

Figure 5.4.2.4.3 Removal/Installation of DC Power Supply PC Board 1A5A1A2.

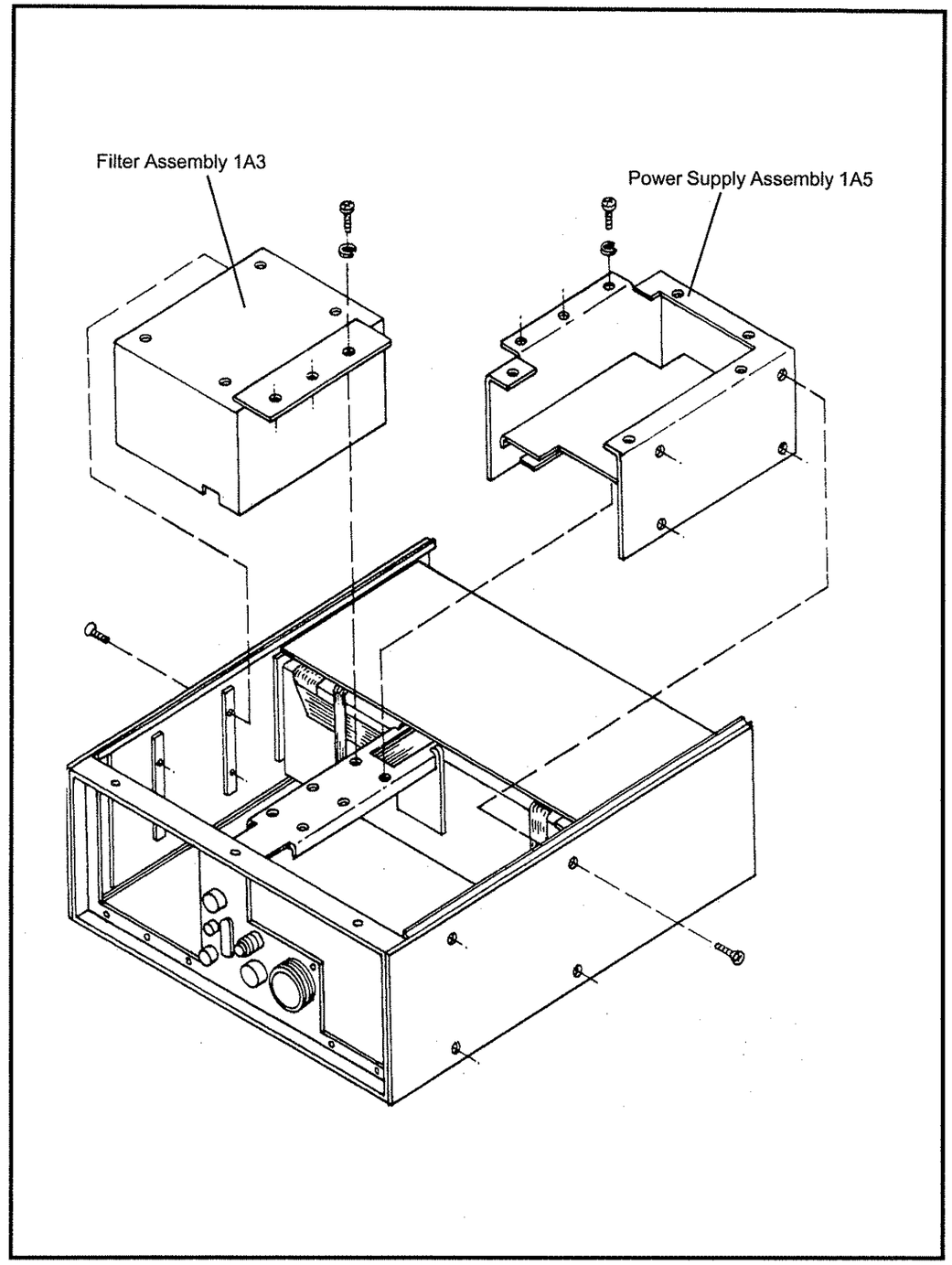

Figure 5.4.2.4.4 Removal/Installation of Module 1A3 and 1A5.

5.4.3 SIGNAL MODULES

5.4.3.1 AUDIO FAULT

This indicates a failure on the Audio PC Assembly 1A2A3.

a) Turn Exciter 'OFF' and remove and replace 1A2A3. See Figures 5.4.1.3 and 5.4.1.4.

b) Turn Exciter 'ON'. Repeat 'BITE TEST'. Upon completion of successful test, return Exciter to operational status. Return failed 1A2A3 to factory for repair.

5.4.3.2 IF FAULT

This indicates a failure on the IF PC Assembly 1A2A4.

a) Turn Exciter 'OFF' and remove and replace 1A2A4. See Figures 5.4.1.3 and 5.4.1.4.

b) Turn Exciter 'ON'. Repeat 'BITE TEST'. Upon completion of successful test, return Exciter to operational status. Return failed 1A2A4 to factory for repair.

5.4.3.3 FRONT END FAULT

This indicates a failure on the Front End PC Assembly 1A2A5.

a) Turn Exciter 'OFF' and remove and replace 1A2A5. See Figures 5.4.1.3 and 5.4.1.4.

b) Turn Exciter 'ON'. Repeat 'BITE TEST'. Upon completion of successful test, return Exciter to operational status. Return failed 1A2A5 to factory for repair.

5.4.3.4 POWER AMP FAULT

This indicates a failure on the Power Amplifier Module 1A4.

a) Turn Exciter 'OFF' and remove and replace 1A4. See Figures 5.4.1.3, 5.4.1.4 and 5.4.2.4.1.

b) Turn Exciter 'ON'. Repeat 'BITE TEST'. Upon completion of successful test, return Exciter to operational status. Return failed 1A4 to factory for repair.

5.4.3.5 FILTER MODULE FAULT

This indicates a failure on the Filter Module Assembly 1A3.

a) Turn Exciter 'OFF' and remove and replace 1A3. See Figures 5.4.1.3, 5.4.1.4, 5.4.2.4.1, and 5.4.2.4.4.

b) Turn Exciter 'ON'. Repeat 'BITE TEST'. Upon completion of successful test, return Exciter to operational status. Return failed 1A3 to factory for repair.

5.5 TROUBLE SHOOTING WITH SELF-SURVEILLANCE BITE

5.5.1 DC TO DC POWER SUPPLY 1A5A1/1A5A1A1/1A5A1A2

Reference Figure 5.5.1.

5.5.2 AC POWER SUPPLY 1A5A2/1A5A2A1/1A5A2A2

Reference Figure 5.5.1

5.5.3 SELECT/DISTRIBUTION REFERENCE AMPLIFIER 1A2A6

Reference Figure 5.5.2

	DC TO DC POWER SUPPLY 1A5A1										AC POWER SUPPLY 1A5A2				POSSIBLE TROUBLE	CORRECTIVE ACTION
LED's X=ON BLANK=OFF	READY	FAULT	5D		5A		12 V		28 V		READY	OVER VOLTAGE	UNDER VOLTAGE	OVER CURRENT		
			OVER	UNDER	OVER	UNDER	OVER	UNDER	OVER	UNDER						
1	X										X				No Trouble	No Action Required
2		X								X	X				1. 1A5A1A1 F1 Open. 2. Short in the Transceiver on +28 V line.	Replace fuse as required. If fuse opens again, use normal trouble shooting procedures to locate and repair short.
3															1. No AC power. 2. Open AC Fuses 1A5A2 F1 and F2. 3. Open 1A5A2 F3.	1. Check for AC input. 2. Replace F1 and F2. If fuses open again, remove and replace 1A5A2 power supply. 3. Replace F3. If it opens again, replace power supply.
4											No AC power supply installed or using only DC to DC supply.				1. No DC power. 2. 1A6 F1 open.	1. Check for +28 VDC input. 2. Replace F1. If it opens again, remove and replace 1A5A1 power supply.
5												X			1A5A2 AC power supply.	Replace 1A5A2 assembly.
6													X		1A5A2 AC power supply.	Replace 1A5A2 assembly.
7														X	1. 1A5A2 AC power supply. 2. Short on +28 V line in DC power supply or Radio.	1. Remove 1A5A1 F1 and P3 to radio and check. Use normal trouble shooting procedures to locate and repair short. 2. Replace 1A5A2 assembly.
8		X		X	X			X			X				U5 and associated circuitry in 1A5A1.	Replace 1A5A1 assembly.
9		X	X			X		X			X				U2 and associated circuitry in 1A5A1.	Replace 1A5A1 assembly.
10		X		X		X	X				X				U1 and associated circuitry in 1A5A1.	Replace 1A5A1 assembly.
11		X						X		X	No AC power supply installed or using only DC to DC supply.				DC power input low.	Correct DC input voltage.
12		X							X		No AC power supply installed or using only DC to DC supply.				DC power input high.	Correct DC input voltage.
13		X				X					X				1. U5 and associated circuitry in 1A5A1. 2. Short on +5 V analog line in Transceiver.	1. Replace 1A5A1 assembly. 2. Use normal trouble shooting procedures to locate and repair short.
14		X		X							X				1. U2 and associated circuitry in 1A5A1. 2. Short on +5 V digital line in Transceiver.	1. Replace 1A5A2 assembly. 2. Use normal trouble shooting procedures to locate and repair short.
15		X						X			X				1. U1 and associated circuitry in 1A5A1.	1. Replace 1A5A2 assembly. 2. Use normal trouble shooting procedures to locate and repair short.

Figure 5.5.1 DC to DC and AC Power Supply Troubleshooting.

SELECT/DISTRIBUTION REFERENCE AMPLIFIER
1A2A6

NOTE: S1A, S1B, and S1C are accomplished by a jumper plug. Normal factory setting is INTERNAL ONLY. However, this value can be changed by the user to INTERNAL OUT or EXTERNAL IN.

LED's X=ON BLANK=OFF	INT ONLY	INT OUT	EXT IN	FAULT	POSSIBLE TROUBLE	CORRECTIVE ACTION
1	X				Normal indication for factory setting.	No action required.
2	X			X	1. No input to 1A2A6. 2. No output from 1A2A6.	1. Use oscilloscope and check input and output on 1A2A7 Mother board J11 pins 5 and 2. Replace as required 1A2A9 or 1A2A6.
3		X			Normal indication for this setting.	No action required.
4		X		X	1. No input to 1A2A6. 2. No output from 1A2A6.	1. Use oscilloscope and check input and output on 1A2A7 Mother board J11 pins 5, 4, and 2. Replace as required 1A2A9 or 1A2A6.
5			X		Normal indication for this setting. Input is from an external frequency standard.	No action required.
6			X	X	1. No input from external frequency standard. 2. No output from 1A2A6.	1. Use oscilloscope and check input from External Standard at J11 pin 4 and check output at J11 pin 2. Replace as required External Standard or 1A2A6.

Figure 5.5.2 Select/Distribution Reference Amplifier Troubleshooting.

5.6 TEST EQUIPMENT REQUIRED OR EQUIVALENT

Multimeter	Simpson 260
Wattmeter, thruline with 250 Watt, 2-30 MHz element	Bird Model 43
Power Supply (optional for DC only), 0-40 Volt @ 30 Amp	HP-6269
Oscilloscope, 100 MHz bandwidth	Tektronix Model 2235
Coaxial Resistor, 50 ohm, 150 Watt (3 each)	Bird Model 8135
Audio Generator (2 each)	Leader Model LAG-120B
Audio Voltmeter	Leader Model LMV-181A
Frequency Counter	Systron-Donner Model 6050 with option 12
RF Voltmeter	Boonton 92EA
100/1 Voltage Divider	Boonton 91-7
Tee Adapter	Boonton 91-14A
Digital Multimeter	Leader LDM-853A
Microphone	P/N 8076000602
CW Key	P/N 5024000994
Coaxial Cable (4 each)	RG-58/U with BNC Connectors
Adaptor, N to BNC (3 each)	UG-201/U
Adaptor, UHF to BNC (2 each)	UG-273/U
'T' Connector BNC (2 each)	UG-274/U
Audio Interface Cable	P/N 8076004594
Remote Key Switch	Any model one (1) pole toggle switch

WARNING: The adjustments called out in the following alignments are all that should be attempted. Any other adjustments not called out are factory adjustments and cannot be done in the exciter.

5.7 EXCITER ALIGNMENT and CHECKS

See Figure 5.7.1 for Test Equipment Connections. Remove top and bottom covers. Once inside Exciter remove 1A3 Filter Module cover (see Figures 5.2.1.1 and 5.4.1.3).

General: Connect coaxial cable from J4 (Antenna) to Thruline Wattmeter and 50 ohm load. Connect RF Voltmeter and Oscilloscope to 50 ohm load. Connect microphone to J3 and CW key to J1.

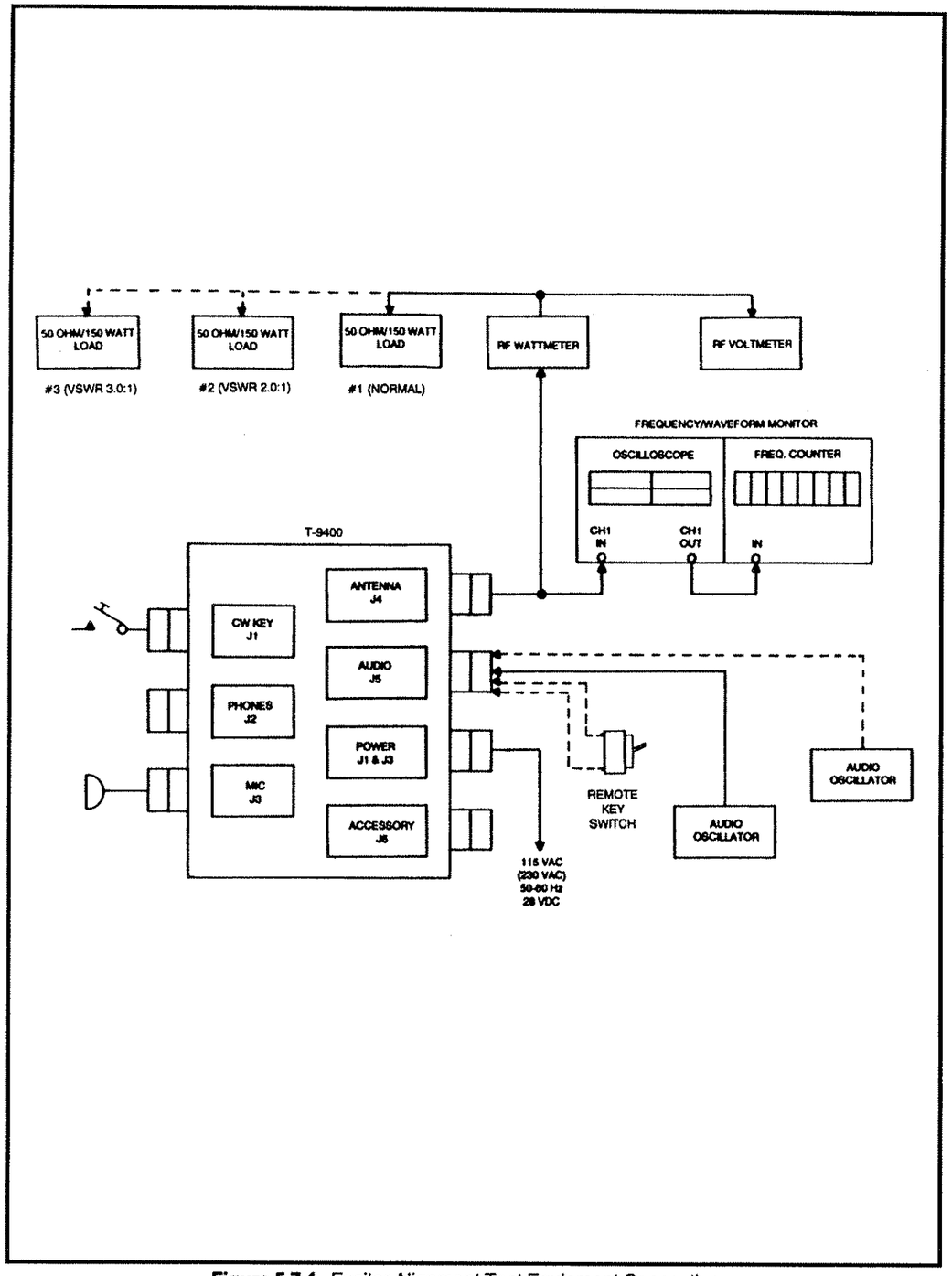

Figure 5.7.1 Exciter Alignment Test Equipment Connections.

VRMS	Vpeak	Vp-to-p	WATTS ACROSS 50 OHMS
32.00	45.25	90.50	20.48
33.00	46.66	93.32	21.78
34.00	48.08	96.15	23.12
35.00	49.49	98.98	24.50
36.00	50.90	101.81	25.92
37.00	52.32	104.64	27.38
38.00	53.73	107.46	28.88
39.00	55.15	110.29	30.42
40.00	56.56	113.12	32.00
41.00	57.97	115.95	33.62
42.00	59.39	118.78	35.28
43.00	60.80	121.60	36.98
44.00	62.22	124.43	38.72
45.00	63.63	127.26	40.50
46.00	65.04	130.09	42.32
47.00	66.46	132.92	44.18
48.00	67.87	135.74	46.08
49.00	69.29	138.57	48.02
50.00	70.70	141.40	50.00
51.00	72.11	144.23	52.02
52.00	73.53	147.06	54.08
53.00	74.94	149.88	56.18
54.00	76.36	152.71	58.32
55.00	77.77	155.54	60.50
56.00	79.18	158.37	62.72
57.00	80.60	161.20	64.98
58.00	82.01	164.02	67.28
59.00	83.43	166.85	69.62
60.00	84.84	169.68	72.00
61.00	86.25	172.51	74.42
62.00	87.67	175.34	76.88
63.00	89.08	178.16	79.38
64.00	90.50	180.99	81.92
65.00	91.91	183.82	84.50
66.00	93.32	186.65	87.12
67.00	94.74	189.48	89.78
68.00	96.15	192.30	92.48
69.00	97.57	195.13	95.22
70.00	98.98	197.96	98.00
71.00	100.39	200.79	100.82
72.00	101.81	203.62	103.68
73.00	103.22	206.44	106.58
74.00	104.64	209.27	109.52
75.00	106.05	212.10	112.50
76.00	107.46	214.93	115.52
77.00	108.88	217.76	118.58
78.00	110.29	220.58	121.68
79.00	111.71	223.41	124.82
80.00	113.12	226.24	128.00
81.00	114.53	229.07	131.22
82.00	115.95	231.90	134.48
83.00	117.36	234.72	137.78
84.00	118.78	237.55	141.12
85.00	120.19	240.38	144.50
86.00	121.60	243.21	147.92
87.00	123.02	246.04	151.38
88.00	124.43	248.86	154.88
89.00	125.85	251.69	158.42
90.00	127.26	254.52	162.00

Table 5.7.1 Power vs Voltage.

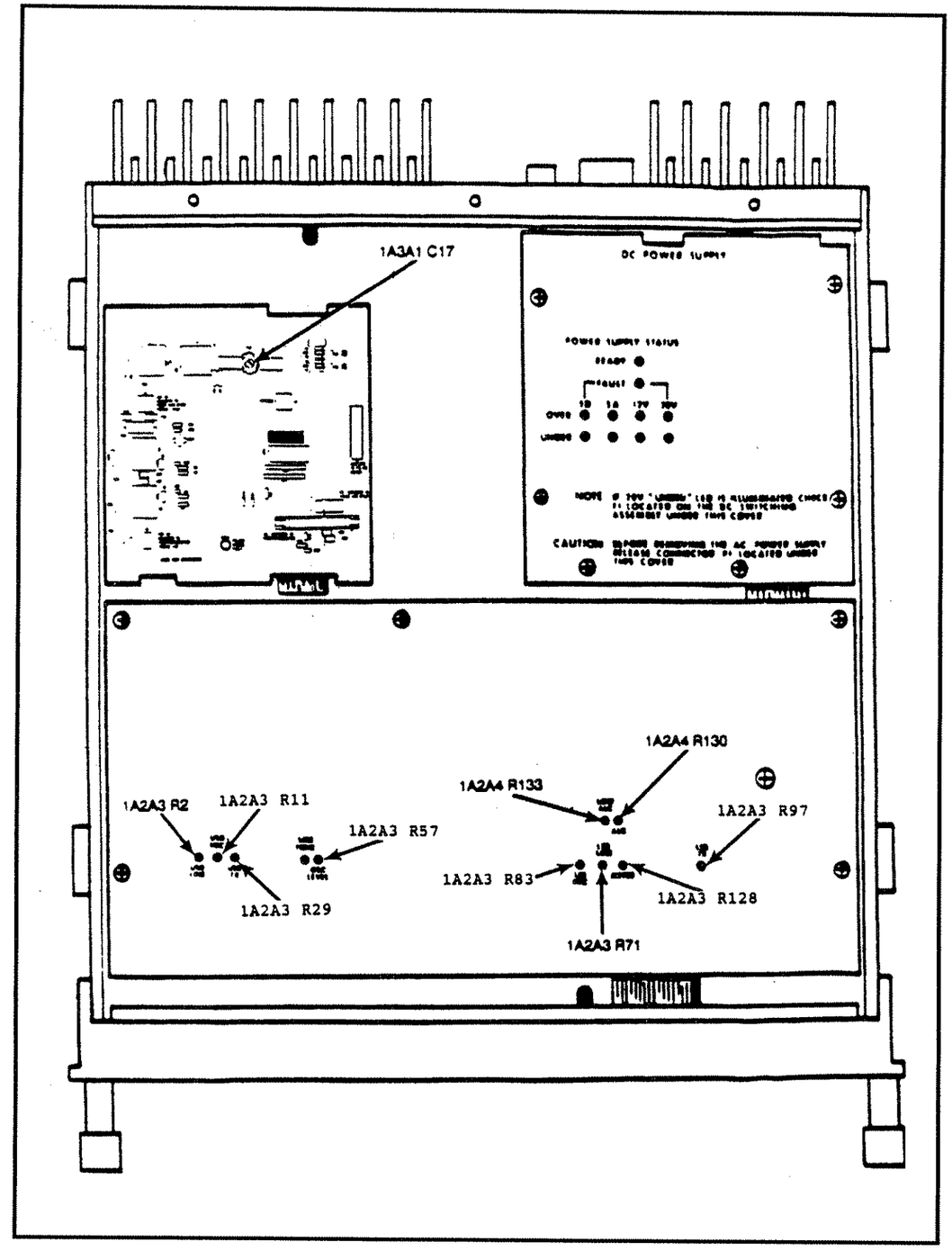

Figure 5.7.2 Alignment Adjustment Locations.

5.7.1 AUTOMATIC LEVEL CONTROL (ALC)

a) Set Exciter to 1.6 MHz, CW mode, 125 Watt level.

b) Depress the CW key and adjust 1A2A4 R130 ALC until output power is 125 Watts/79 VRMS or 223 V peak to peak (see Table 5.7.1 and Figure 5.7.2), release CW Key.

c) Change Exciter to 29.999 MHz and depress CW Key. Adjust C17 on 1A3A1 (Filter Module) for output power of 125 Watts/79 VRMS or 223 V peak to peak (see Table 5.7.1 and Figure 5.7.2), release CW Key.

NORMAL: Go on to step d).
ABNORMAL: Remove and replace the following LRUs one at a time and re-accomplish steps a) through c) each time:

AUDIO ASSEMBLY 1A2A3.
IF/FILTER ASSEMBLY 1A2A4
FRONT END ASSEMBLY 1A2A5
POWER AMPLIFIER MODULE 1A4
FILTER MODULE 1A3

d) Check the output power of the Exciter at 1 MHz increments from 1.6 to 29.6 MHz, and at 29.9999 MHz. The output at all frequencies should be between 112.5 Watts/75 VRMS and 137.7 Watts/83 VRMS (see Table 5.7.1). Set Exciter frequency to 1.6 MHz. Select 'FWD' meter on Front Panel. Depress CW Key and note that Operation Display indicates 100 to 150 Watts on Bar Graph. Unkey and select 'ALC' meter. Depress CW Key and meter should display approximately 120 on the Bar Graph. Unkey and select 'RFLD' meter. Depress CW Key and meter should display zero (0) on the Bar Graph. Unkey and select 'FWD' meter.

NORMAL: Go on to test 5.7.2.
ABNORMAL: Remove and replace the following LRUs one at a time and re-accomplish step d) each time:

AUDIO ASSEMBLY 1A2A3.
FRONT END ASSEMBLY 1A2A5
POWER AMPLIFIER MODULE 1A4
FILTER MODULE 1A3

5.7.2 LOW POWER AUTOMATIC LEVEL CONTROL (ALC)

a) Set Exciter power level to 65 Watts and mode to CW.

b) Depress the CW key and adjust 1A2A4 R133 LOW ALC until output power is 65 Watts/57 VRMS or 161 V peak to peak (see Table 5.7.1 and Figure 5.7.2).

NORMAL: Go on to step c).
ABNORMAL: Remove and replace the IF/FILTER Assembly 1A2A4 and re-accomplish steps a) and b).

c) Check the output power of the Exciter at 1 MHz increments from 1.6 to 29.6 MHz, and at 29.9999 MHz. The output at all frequencies should be between 55 and 59 VRMS (see Table 5.7.1).

NORMAL: Go on to test 5.7.3.
ABNORMAL: Remove and replace the following LRUs one at a time and re-accomplish step c) each time:

FRONT END ASSEMBLY 1A2A5
POWER AMPLIFIER MODULE 1A4
FILTER MODULE 1A3

5.7.3 AUTOMATIC CARRIER CONTROL (ACC)

NOTE: This is an Exciter operational check. The ACC Level is factory set.

a) Set Exciter to 1.6 MHz, AM Mode, 125 Watt level. Connect test equipment as in 5.7).

b) Depress CW Key and verify that output power is between 35 Watts/42 VRMS or 119 V peak-to-peak and 60 Watts/55 VRMS or 156 V peak-to-peak (see Table 5.7.1). Unkey Exciter.

c) Check the Exciter output power in 1 MHz increments from 1.6 to 29.6 and at 29.999 MHz. The power out should be between 35 and 60 Watts at all frequencies.

NORMAL: Go on to 5.7.4. ACC circuitry is operating normally.
ABNORMAL: Remove and replace the IF/FILTER Board Assembly 1A2A4 and re-accomplish steps a) through c).

5.7.4 VSWR AUTOMATIC LEVEL CONTROL (ALC)

NOTE: This is an Exciter operational check. The ALC Level is factory set.

a) Set Exciter to 1.6 MHz, CW Mode, 125 Watt level. Connect test equipment as in 5.7.

b) Depress CW Key and verify that output power is between 112.5 and 137.7 Watts measured on Wattmeter. Unkey Exciter.

c) Using a 'T' Connector, connect a second 50 ohm load in parallel with the original 50 ohm load (See Figure 5.7.1). Key the Exciter, the Wattmeter should read within 10 Watts of the reading obtained in step b). Unkey the Exciter.

NOTE: Due to the two (2) 50 ohm loads in parallel the impedance that the test equipment and the Exciter see is no longer 50 ohms, therefore, the Wattmeter readings are approximate. This test simulates the Exciter working into a VSWR of 2.0:1.

d) Using a second 'T' Connector, connect a third 50 ohm load in parallel with the other two loads. Key the Exciter. The Wattmeter should read less than 80 Watts. Unkey the Exciter.

NOTE: With three (3) 50 ohm loads in parallel the impedance that the test equipment and the Exciter see is no longer 50 ohms, therefore, the Wattmeter readings are approximate. This test simulates the Exciter transmitting into a VSWR of 3.0:1.

e) Disconnect all three (3) 50 ohm loads from the Wattmeter causing the Exciter to transmit into an open termination. Key the Exciter. The Wattmeter stabilizes at less than 25 Watts.

NORMAL: Go on to 5.7.5. The Exciter VSWR ACC circuitry is working properly.
ABNORMAL: Remove and replace the IF Board Assembly 1A2A4 and re-accomplish steps b) through e).

5.7.5 AM MODULATION

NOTE: This is an Exciter operational check. The AM modulation is factory set.

a) Set Exciter to 1.6 MHz, AM mode, and power to 125 Watt level. Connect test equipment per section 5.7.

b) Key the Exciter with microphone Push-to-Talk (PTT) switch and speak in a normal tone of voice. Amplitude Modulation of the RF envelope should be displayed on the Oscilloscope with a varying peak-to-peak of up to 220 V while speaking.

NORMAL: Go on to 5.7.6. The AM Modulation circuitry is operating properly.
ABNORMAL: Use the Oscilloscope to check the microphone input to Audio Board Assembly 1A2A3.

1) While speaking into the microphone check for a varying audio signal of up to 200 mV peak-to-peak on the Mother Board 1A2A7 P9 pin 4 and J5 pin 1. If there is no audio signal at these points use normal trouble shooting techniques, and check for faulty microphone or circuit path from Front Panel Microphone Connector J3.

2) If preceding checks are normal remove and replace Audio Board 1A2A3 and re-accomplish step b).

5.7.6 USB/LSB MODULATION

NOTE: This is an Exciter operational check. The modulation level is factory set.

a) Set Exciter to 1.6 MHz, USB mode, and power to 125 Watt level. Connect test equipment per section 5.7.

b) Key the Exciter with microphone 'PTT' switch and speak in a normal tone of voice. RF should be displayed on Oscilloscope with a varying peak-to-peak up to 220 V while speaking into microphone. Unkey Exciter.

c) Set Exciter mode to LSB, depress microphone 'PTT' switch and speak in a normal tone of voice. Oscilloscope should have same display as in step b). Unkey Exciter.

NORMAL: Go on to 5.7.7.
ABNORMAL: Use the same procedure as in ABNORMAL AM Modulation, section 5.7.5.

5.7.7 EXCITER OUTPUT FREQUENCY

a) Set Exciter to 1.6 MHz, AM mode, and power to 125 Watt level. Connect test equipment per section 5.7. Connect frequency counter to vertical output connector on Oscilloscope.

b) Key the Exciter with microphone 'PTT' and observe the frequency of the output. This should be within one (1) part per million of that selected on the Front Panel of the Exciter. Unkey Exciter.

c) Repeat step b) at the following frequencies:

2.22222
3.33333
4.44444
5.55555
6.66666
7.77777
8.88888
9.99999
10.00000
11.11111
20.00000

NORMAL: If the above frequencies are all within tolerance stated in step b) go on to 5.7.8.

ABNORMAL: Connect Oscilloscope and Frequency Counter to Exciter Mother Board, 1A2A7 J12 pin 6 ('TCXO' out). The frequency must be 5.0 MHz ±5.0 Hz.

1) If this frequency checks good, remove and replace Synthesizer Assembly 1A2A2 and re-accomplish steps b) and c).

2) If 'TCXO' frequency is out of tolerance: first remove the Exciter module cover, then remove the 'TCXO' top cover screw (see Figures 5.4.1.3 and 5.4.1.4) and adjust trimmer in the 'TCXO' to the frequency stamped on the cover. This adjustment should only be done with 'TCXO' at room temperature (25 C / 75 F). If unable to adjust, or 'TCXO' drifts more than 10 Hz, remove and replace the 'TCXO' (1A2A9) and re-accomplish steps b) and c).

5.7.8 USB/LSB TRANSMIT LINE LEVEL

NOTE: This 600 ohm remote audio level has been factory aligned to allow the Exciter to provide rated RF output power via the Audio Board (1A2A3) Compressor Circuit for a 0 dBm 1.5 kHz audio input. This circuit nominally operates ±10 dB for rated RF output power.

a) Set Exciter to 1.6 MHz, LSB mode and power to 125 Watt level. Connect one (1) Audio Generator to remote audio connector J5 pins H and J (USB AUDIO C) and another Audio Generator to J5 pins L and M (LSB AUDIO A). Adjust both Audio Generators to 1.5 kHz, 0 dBm output. Connect J5 pins G and F to remote key switch (see Figure 5.7.1). On Exciter Front Panel select 'LINE AUDIO' menu and select 'LSB-A*' and 'USB-C*' keys. Depress 'MIC SEL' key until 'MIC-O' is displayed on the Operational Display.

b) Key the Exciter with remote key switch and check RF LSB output power. It should read between 112.5 Watts/75 VRMS and 125 Watts/83 VRMS. Ideally it should be 125 Watts/79 VRMS (see Table 5.7.1). Unkey the Exciter, set mode to USB and depress 'MIC SEL' key until 'MIC-O' is displayed. Key the Exciter and check RF USB output power. It should read the same as LSB RF power above. Vary the Audio Generator to -10 dB and +10 dB. RF output power should remain constant as Audio Generator is varied. Return Audio Generator to 0 dBm and unkey Exciter.

NORMAL: Go on to step c). Transmit line level and compressor circuits are operating properly.

ABNORMAL: Set Exciter and test equipment as in 5.7.8 a). Remove Exciter module cover and set 1A2A3 S1-3 and S2-3 to 'OFF' position (see Figure 5.8.12). Key the Exciter and adjust 1A2A3 R71 (LSB XMIT LINE LEVEL) for 125 Watts/79 VRMS. Unkey Exciter and select USB mode and 'MIC-O', key the Exciter and adjust 1A2A3 R2 (USB XMIT LINE LEVEL) for 125 Watts/79 VRMS. After accomplishing above alignments, reset S1-3 and S2-3 to 'ON' and re-accomplish step b).

1) If unable to accomplish above alignment use normal troubleshooting procedures to check audio lines A and C from J5 to Audio Board by signal tracing on the PC Assembly Mother Board 1A2A7 (see Figure 5.8.3).

2) If this checks good remove and replace Audio Board Assembly (1A2A3) making sure that the replacement 1A2A3's S1 and S2 are properly set (see Figure 5.8.12). Re-accomplish step b).

c) Disconnect both Audio Generators and reconnect one (1) generator to J5 pins A and C (LSB AUDIO B) and the other generator to J5 pins S and T (USB AUDIO D). On Exciter Front Panel select 'LINE AUD' menu and then select 'LSB-B*' and 'USB-D*' keys. Select LSB mode and depress 'MIC SEL' key until 'MIC-O' is displayed on the Operational Display.

d) Key the Exciter with remote key switch and verify that Exciter is still producing full power as in step b). Unkey Exciter, select USB mode and depress 'MIC SEL' key until 'MIC-O' is displayed. Key Exciter and verify full power as in step b).

NORMAL: Go on to section 5.7.9. All transmit lines are operating properly.

ABNORMAL: This is not an alignment problem as there is only one (1) alignment for each pair of audio input lines and the Exciter passed test b). Accomplish the following to isolate and correct the problem:

1) Signal trace the B and D audio lines from J5 to Audio Board inputs on the Mother Board (see Figure 5.8.3).

a) If signal tracing indicates Audio is at the Audio Board inputs remove and replace Audio Board 1A2A3 and re-accomplish step d). If step d) is NORMAL go on to 5.7.9. If step d) is ABNORMAL, go on to step 2) below.

2) Signal trace the control signals (LSB A/B AUDIO SELECT and USB C/D AUDIO SELECT) from CPU Assembly 1A2A1 to Audio Board 1A2A3 on the Mother Board 1A2A7 (see Figure 5.8.3).

NORMAL: Observe control signal levels changing as the following are selected on the Exciter Front Panel; 'LSB-A*', 'USB-C*' and then 'LSB-B*', USB-D*'.

ABNORMAL: Remove and replace the following LRU's one (1) at a time until the problem is corrected:

CPU ASSEMBLY 1A2A1
FRONT PANEL ASSEMBLY 1A1

5.7.9 TRANSMIT GAIN CONTROL (TGC SETUP)

NOTE: This is only an operational check of the IF Assembly's (1A2A4) TGC Circuitry. There are no adjustments.

a) Set Exciter to 29.999 MHz, ISB mode, and power to 100 Watt level. Depress 'MIC SEL' key until 'MIC-O' is displayed. Connect Thruline Wattmeter, RF Voltmeter, Oscilloscope and 50 ohm load to Exciter (see Figure 5.7.1).

b) Depress 'TGC' key and observe the test equipment to see where the RF output level settles after the automatic setup is completed. The RF output level should be between 32 VRMS/20 Watts and 42 VRMS/35 Watts (see Table 5.7.1).

Repeat this test at 1.6 and 12.0 MHz. The RF output level should be the same as step b) above, between 20 and 35 Watts.

NOTE: During this test 'TGC FAULT' should NOT be displayed.

If 'TGC FAULT' is displayed, verify test equipment setup and connections and Exciter settings. Turn Exciter power OFF and then ON (resetting CPU) and re-accomplish step b).

If 'TGC FAULT' is again displayed after completing above procedure, remove and replace IF/FILTER Assembly 1A2A4, and re-accomplish step b).

c) With equipment still connected as per 5.7.9 a), connect one (1) Audio Generator to J5 pins H and J (USB AUDIO C) and another Audio Generator to J5 pins L and M (LSB AUDIO A). Adjust both Audio Generators to 1.5 kHz, 0 dBm output. Connect J5 pins G and F to remote key switch (see Figure 5.7.1). On Exciter Front Panel go to the 'LINE AUDIO' menu and select 'LSB-A*' and 'USB-C*' keys. Depress 'MIC SEL' until 'MIC-O' is displayed on the Operational Display. Set Exciter to 29.999 MHz, ISB mode and power to 100 Watt level.

d) Depress 'TGC' key and when automatic setup is completed, key the Exciter with remote key switch.

NORMAL: A 100% modulated 165 to 220 Volt peak-to-peak waveform should be displayed on the oscilloscope. Repeat step d) at 1.6 and 12.0 MHz and observe same waveform as above. This completes the Exciter alignment and checks. Return equipment to normal operation.

ABNORMAL: Remove and replace IF/FILTER Assembly 1A2A4 and then re-accomplish step d).

SOFTWARE SWITCH SETTINGS ON CPU PC ASSEMBLY 1A2A1 for T-9400 OPTIONS.

NOTE: S1 Sections 1 through 8 are normally set to OPEN position (all rocker switches are raised at open side, see Figure 5.8.4). If while performing maintenance on the T-9400 the 1A2A1 is replaced, make sure 1A2A1 S1 is configured for non-optionized or for the applicable options installed in the Exciter.

S1 SECTION	SELECTION		OPTION/FUNCTION
	RAISED AT OPEN	RAISED AT NUMBER	
1	OPEN		Normal 1A2A9 TCXO installed.
		1	Optional High Stability 1A2A9 TCXO installed.
2	OPEN		Spare Function / Not used at this time.
3	OPEN		Spare Function / Not used at this time.
4	OPEN		Normal LSB Filter 1A2A4 FL3 installed.
		4	LSB Filter 1A2A4 FL3 plus optional LSB Data Filter 1A2A4 FL4 installed.
5	OPEN		Normal USB Filter 1A2A4 FL4 installed.
		5	USB Filter 1A2A4 FL1 plus optional USB Data Filter 1A2A4 FL2 installed.
6	OPEN		Normal T-9400 / Stand alone Exciter.
		6	Optional external Post-Selector used with T-9400.
7	OPEN		Not Connected / Not used at this time.
8	OPEN		Not Connected / Not used at this time.

Figure 5.7.8.1 Switch Settings for 1A2A1 S1.

5.8 SCHEMATICS AND PARTS LISTS

The following pages contain schematics and parts lists for the T-9400, see Table 5.8 below.

DESIGNATOR		DESCRIPTION	SUNAIR PART NUMBER
ASSEMBLY	SUBASSEMBLY		
1A1		FRONT PANEL ASSEMBLY	81030400XX
	1A1A1	PC ASSEMBLY FRONT PANEL	8076045096
	1A1A2	KEYBOARD, 6X4	8103046809
	1A1A3	CUSTOM LCD, FULL FUNCTION	8076040604
	1A1A4	CUSTOM LCD, 1X40 CHARA	8076041601
	1A1A5	KEYBOARD, 1X5	8076046505
1A2		EXCITER	
	1A2A1	PC ASSEMBLY, CPU	8076070091
	1A2A1A1	OPTO COUPLER	8076075092
	1A2A2	SYNTHESIZER MODULE	8076060095
	1A2A2A1	PC ASSEMBLY, FIRST L.O.	8076068096
	1A2A2A2	PC ASSEMBLY, SECOND L.O.	8076066093
	1A2A2A3	PC ASSEMBLY, BFO	8076062098
	1A2A2A4	PC ASSEMBLY, REF LOOP AND DOUBLER	8076064091
	1A2A2A5	PC ASSEMBLY, MOTHER BOARD (SYN)	8076061091
	1A2A3	PC ASSEMBLY, AUDIO	8103090093
	1A2A4	PC ASSEMBLY, IF/FILTER	8103080098
	1A2A5	PC ASSEMBLY, FRONT END	8076100097
	1A2A6	PC ASSEMBLY, REFERENCE DRIVER	8076120098
	1A2A7	PC ASSEMBLY, MOTHER BOARD	8103017094
	1A2A8	PC ASSEMBLY, I/O BOARD	8076110092
	1A2A8A1	PC ASSEMBLY, FSK MODEM	8076115094
	1A2A9	TCXO, 5 MHz	5024012704
1A3		FILTER ASSEMBLY	8076050090
	1A3A1	PC ASSEMBLY, DETECTOR	8076053099
	1A3A2	PC ASSEMBLY, BANDS 1-4	8076057094
	1A3A3	PC ASSEMBLY, BANDS 5-8	8076055091
1A4		POWER AMPLIFIER ASSEMBLY	8076030099
	1A4A1	PC ASSEMBLY, POWER AMP	8076031095
1A5		POWER SUPPLY MODULE	
	1A5A1	POWER SUPPLY ASSEMBLY, 28 VDC	8103020095
	1A5A1A1	PC ASSEMBLY, SWITCHING REGULATORS	8103022098
	1A5A1A2	PC ASSEMBLY, CONTROL LOGIC	8076024099
	1A5A2	POWER SUPPLY ASSEMBLY, 115/230 VAC	8103021091
	1A5A2A1	PC ASSEMBLY, FILTER AC/PS	8076021197
	1A5A2A2	PC ASSEMBLY, 28 V REGULATOR 17 AMP	8076021391
1A6		REAR PANEL	
	1A6A1	PC ASSEMBLY, REAR PANEL CONNECTOR	8076011094
1A7		CHASSIS ASSEMBLY	81030100XX

Table 5.8 T-9400 Table of Asemblies.

810201350
810304053
5024043502 11,5 4
5024043,420 11 2
050161 2823 4 (13/4)

CONNECTOR KIT

	CONNECTOR KIT ADAPTER, RF, FOR PL-259 CONNECTOR, RF, UHF PL-259 CONNECTOR, RF, BNC UG-88/U CONNECTOR, POWER, 9 PIN FEMAL CONNECTOR, POWER, 19 PIN MALE JUNCTION SHELL, DB-9

SUNAIR T-9400

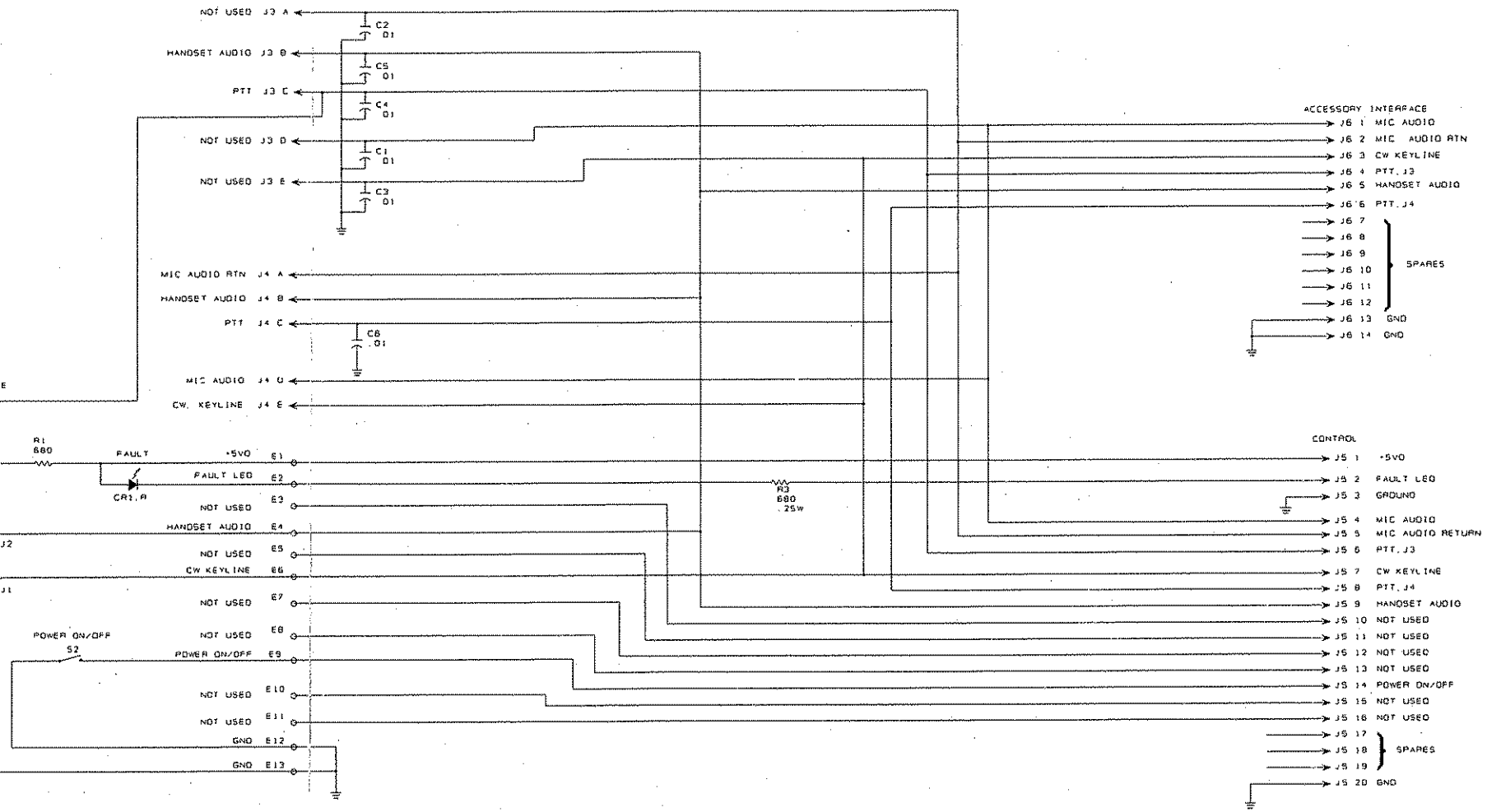

PC ASSY, FRONT PANEL 1A1A1

	PC ASSY, FRONT PANEL 3A1A1	8076045096
C1	CAP. .47µF, 50V, X7R 20%	0283377771
C2	CAP. 0.1µF, 50V, X7R, 20%	0281610002
C3	CAP. 0.047 µF, 50V, X7R, 10%	1010740008
C4	CAP. 100µF 20V 20%	1005120030
C5	CAP. 47µF, 35V	0282190007
C6	CAP. 0.001µF, 100V, X7R, 20%	0281630003
C7	CAP. 0.001µF, 100V, X7R, 20%	0281630003
C10	CAP. .01µF, 50V, X7R 20%	0281730008
C11	CAP. .01µF, 50V, X7R 20%	0281730008
C12	CAP. .01µF, 50V, X7R 20%	0281730008
C13	CAP. .01µF, 50V, X7R 20%	0281730008
C14	CAP. .01µF, 50V, X7R 20%	0281730008
C15	CAP. .01µF, 50V, X7R 20%	0281730008
C16	CAP. .01µF, 50V, X7R 20%	0281730008
C17	CAP. .01µF, 50V, X7R 20%	0281730008
C18	CAP. .01µF, 50V, X7R 20%	0281730008
C19	CAP. .01µF, 50V, X7R 20%	0281730008
C20	CAP. .01µF, 50V, X7R 20%	0281730008
C21	CAP. .01µF, 50V, X7R 20%	0281730008
C22	CAP. .01µF, 50V, X7R 20%	0281730008
C23	CAP. .01µF, 50V, X7R 20%	0281730008
C24	CAP. .01µF, 50V, X7R 20%	0281730008
C25	CAP. .01µF, 50V, X7R 20%	0281730008
C26	CAP. .01µF, 50V, X7R 20%	0281730008
C27	CAP. .01µF, 50V, X7R 20%	0281730008
C28	CAP. .01µF, 50V, X7R 20%	0281730008
C29	CAP. .01µF, 50V, X7R 20%	0281730008
C30	CAP. .01µF, 50V, X7R 20%	0281730008
C31	CAP. .01µF, 50V, X7R 20%	0281730008
C32	CAP. .01µF, 50V, X7R 20%	0281730008
C33	CAP. .01µF, 50V, X7R 20%	0281730008
C34	CAP. .01µF, 50V, X7R 20%	0281730008
C35	CAP. .01µF, 50V, X7R 20%	0281730008
C36	CAP. .01µF, 50V, X7R 20%	0281730008
C37	CAP. .01µF, 50V, X7R 20%	0281730008
C38	CAP. .01µF, 50V, X7R 20%	0281730008
C39	CAP. .01µF, 50V, X7R 20%	0281730008
C40	CAP. .01µF, 50V, X7R 20%	0281730008
C41	CAP. 1µF, 35V, T368	0283630001
C42	CAP. 22µF, 15V, T368	0296660001

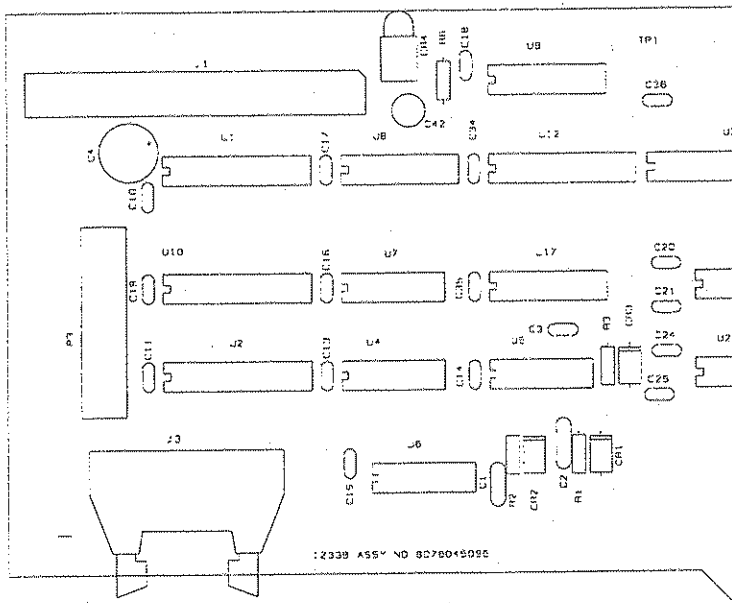

R6	RESISTOR 220, 10%, 1/4W	0171320000
R7	RESISTOR 47K, 10%, 1/4W	0171060008
R8	RESISTOR 330, 5%, 1/4W	0170910008
R9	RESISTOR 330, 5%, 1/4W	0170910008
R10	RESISTOR 6.8K, 5%, 1/4W	0174810008
R11	RESISTOR 6.8K, 5%, 1/4W	0174810008
R12	RESISTOR 22K, 5%, 1/4W	0172230004
R13	RESISTOR 100K, 10%, 1/4W	0170390004
RP1	RES NTWK 10 PIN SIP 10K COM	1006130021
U1	IC. DIGITAL 74HC374	1006450033
U2	IC. DIGITAL 74HC244	1006460039
U3	IC. DIGITAL 74HC30	1010240021
U4	IC. DIGITAL 74HC74	1008000019
U5	IC. DIGITAL 74HC14	1006490027
U6	IC. DIGITAL 74HC14	1006490027
U7	IC. DIGITAL 74HC10	1008010006

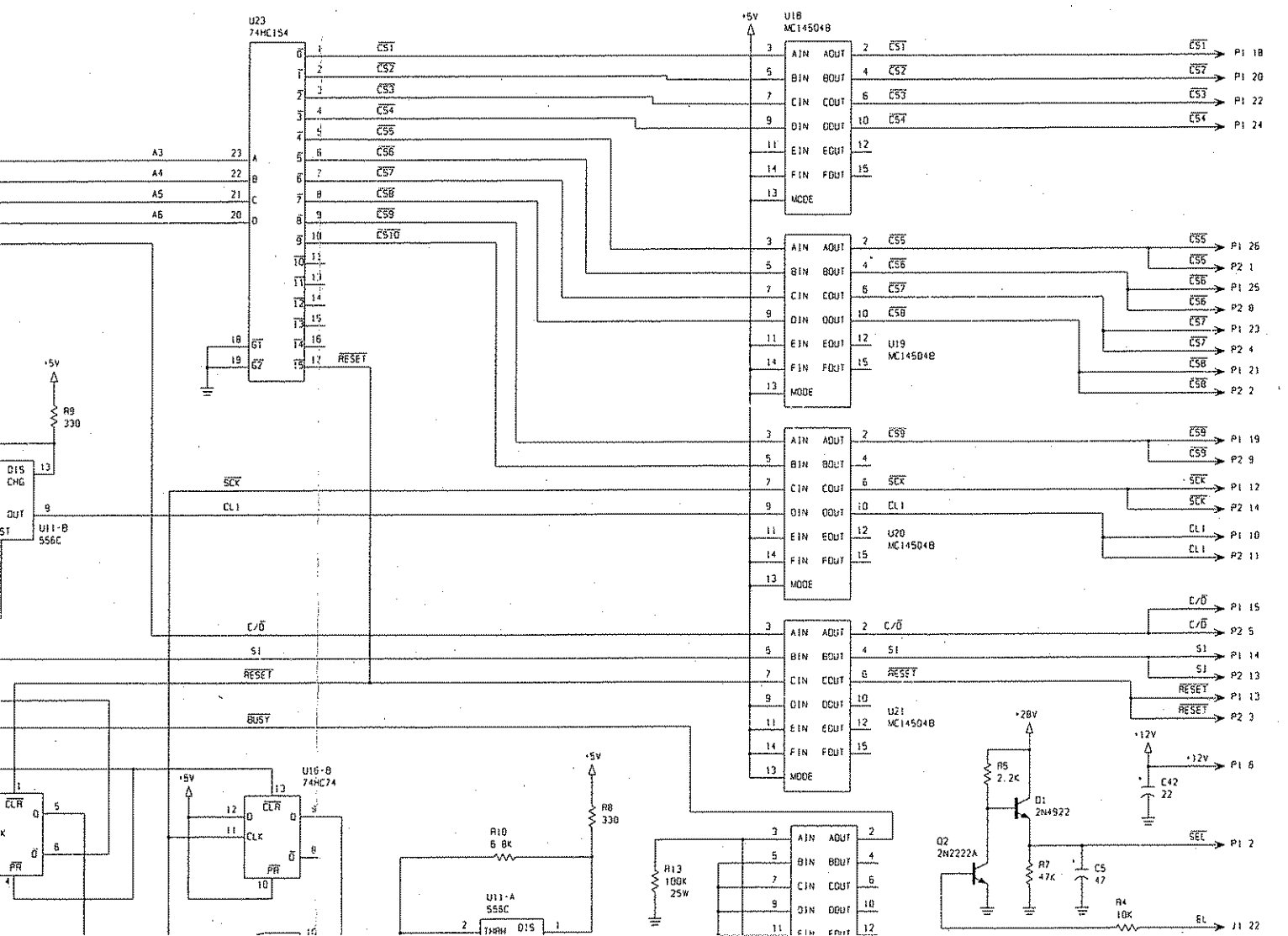
U23
74HC154
U18
MC14504B
U19
MC14504B
U20
MC14504B
U21
MC14504B
U11-B
556C
U16-B
74HC74
U11-A
556C
+5V
+28V
+12V
R9
330
R8
330
R10
6.8K
R13
100K
25W
R5
2.2K
R7
47K
R4
10K
C5
47
C42
22
Q1
2N4922
Q2
2N2222A
CS1
CS2
CS3
CS4
CS5
CS6
CS7
CS8
CS9
CS10
RESET
SCK
CLI
C/D
SI
BUSY
SEL
EL
P1 18
P1 20
P1 22
P1 24
P1 26
P2 1
P1 25
P2 8
P1 23
P2 4
P1 21
P2 2
P1 19
P2 9
P1 12
P2 14
P1 10
P2 11
P1 15
P2 5
P1 14
P2 13
P1 13
P2 3
P1 6
P1 2
J1 22

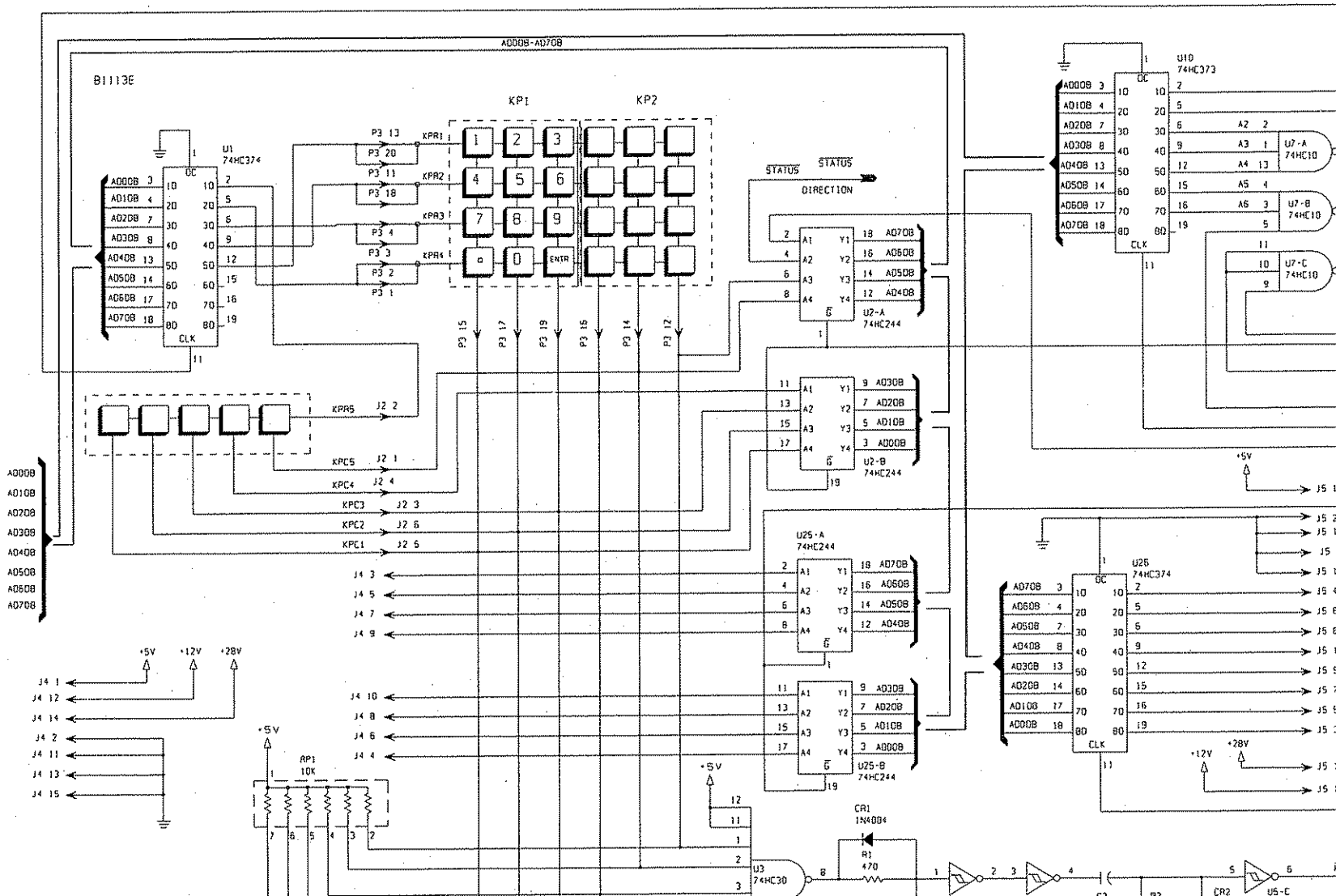
B1113E
AD00B-AD70B
U1
74HC374
KP1
KP2
STATUS
DIRECTION
U2-A
74HC244
U2-B
74HC244
U10
74HC373
U7-A
74HC10
U7-B
74HC10
U7-C
74HC10
U25-A
74HC244
U25-B
74HC244
U26
74HC374
RP1
10K
U3
74HC30
CR1
1N4004
R1
470
U5-C
CR2
+5V
+12V
+28V

SUNAIR T-9400

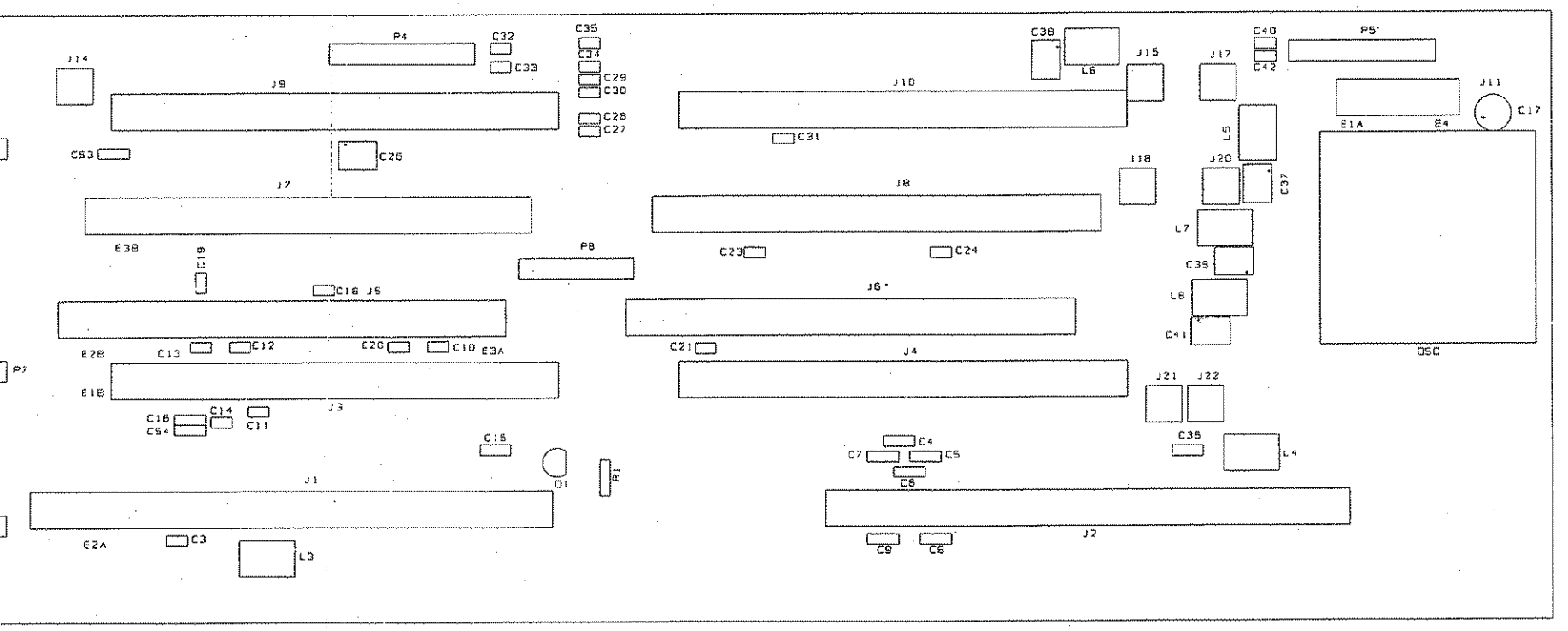

ECTOR, RF, JACK	1010810006
ECTOR, RF, JACK	1010810006
ECTOR, RF, JACK	1010810006
ECTOR, RF, JACK	1010810006
ECTOR, RF, JACK	1010810006
CTOR, MOLDED, 47UH, 5%	0646420003
E, POWER	8076104700
E, POWER	8076104700
E, POWER	8076104700
E, POWER	8076104700
E, POWER	8076104700
E, POWER	8076104700
E, POWER	8076104700

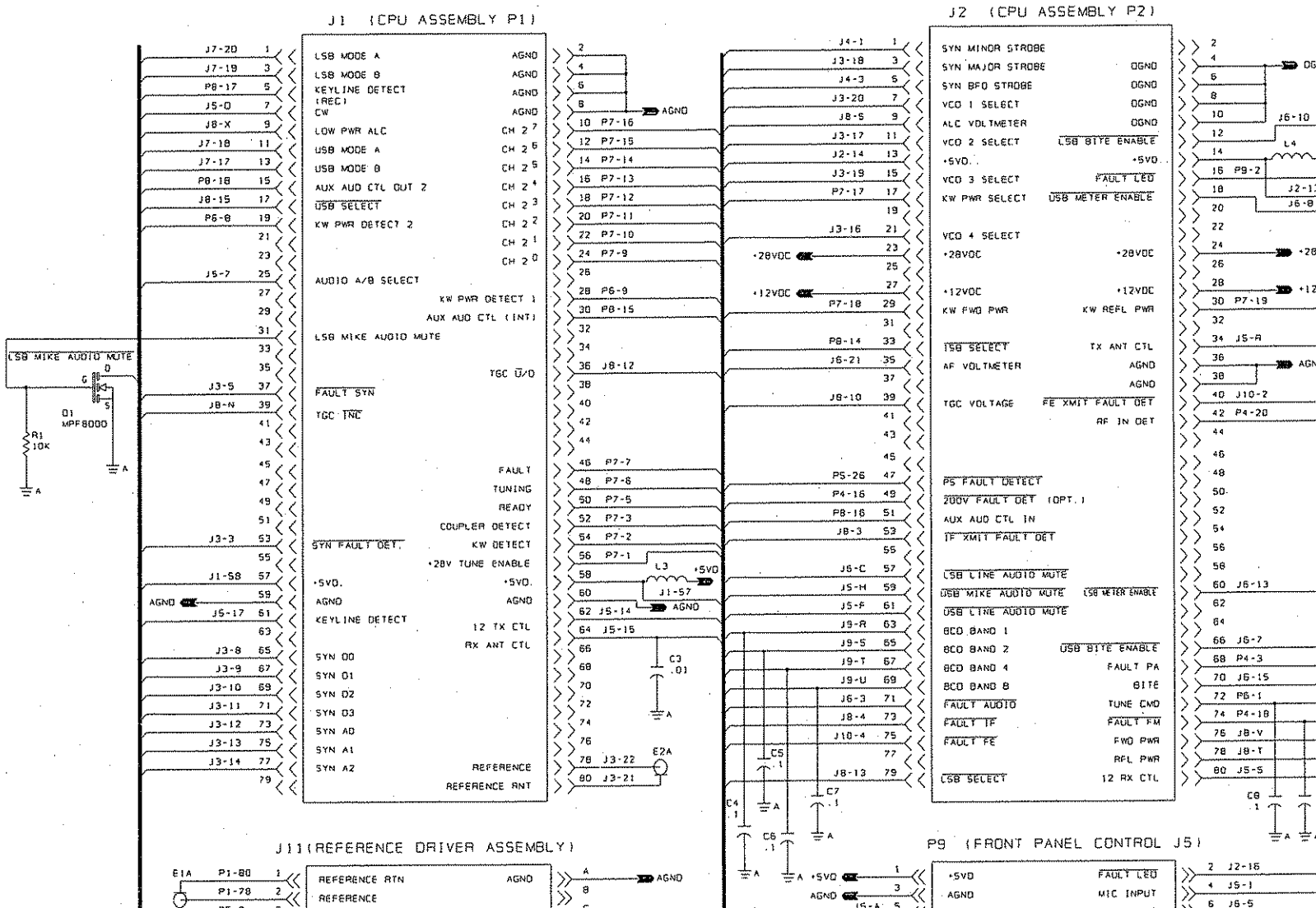
J1 (CPU ASSEMBLY P1)
LSB MODE A
LSB MODE B
KEYLINE DETECT (REC)
CW
LOW PWR ALC
USB MODE A
USB MODE B
AUX AUD CTL OUT 2
USB SELECT
KW PWR DETECT 2
AUDIO A/B SELECT
KW PWR DETECT 1
AUX AUD CTL (INT)
LSB MIKE AUDIO MUTE
TGC U/D
FAULT SYN
TGC INC
FAULT
TUNING
READY
COUPLER DETECT
SYN FAULT DET.
KW DETECT
+28V TUNE ENABLE
+5VD.
AGND
KEYLINE DETECT
12 TX CTL
RX ANT CTL
SYN D0
SYN D1
SYN D2
SYN D3
SYN A0
SYN A1
SYN A2
REFERENCE
REFERENCE RNT
LSB MIKE AUDIO MUTE
Q1 MPF8000
R1 10K
L3
C3 .01
E2A
J2 (CPU ASSEMBLY P2)
SYN MINOR STROBE
SYN MAJOR STROBE
SYN BFO STROBE
VCO 1 SELECT
ALC VOLTMETER
VCO 2 SELECT
+5VD.
VCO 3 SELECT
KW PWR SELECT
VCO 4 SELECT
+28VDC
+12VDC
KW FWD PWR
KW REFL PWR
LSB SELECT
TX ANT CTL
AF VOLTMETER
TGC VOLTAGE
FE XMIT FAULT DET
RF IN DET
PS FAULT DETECT
200V FAULT DET (OPT.)
AUX AUD CTL IN
IF XMIT FAULT DET
LSB LINE AUDIO MUTE
USB MIKE AUDIO MUTE
LSB METER ENABLE
USB LINE AUDIO MUTE
BCD BAND 1
BCD BAND 2
BCD BAND 4
BCD BAND 8
USB BITE ENABLE
FAULT AUDIO
FAULT PA
FAULT IF
BITE
FAULT FE
TUNE CMD
FAULT FM
FWD PWR
RFL PWR
LSB SELECT
12 RX CTL
C4 .1
C5 .1
C6 .1
C7 .1
C8 .1
J11 (REFERENCE DRIVER ASSEMBLY)
REFERENCE RTN
REFERENCE
P9 (FRONT PANEL CONTROL J5)
+5VD
AGND
FAULT LED
MIC INPUT

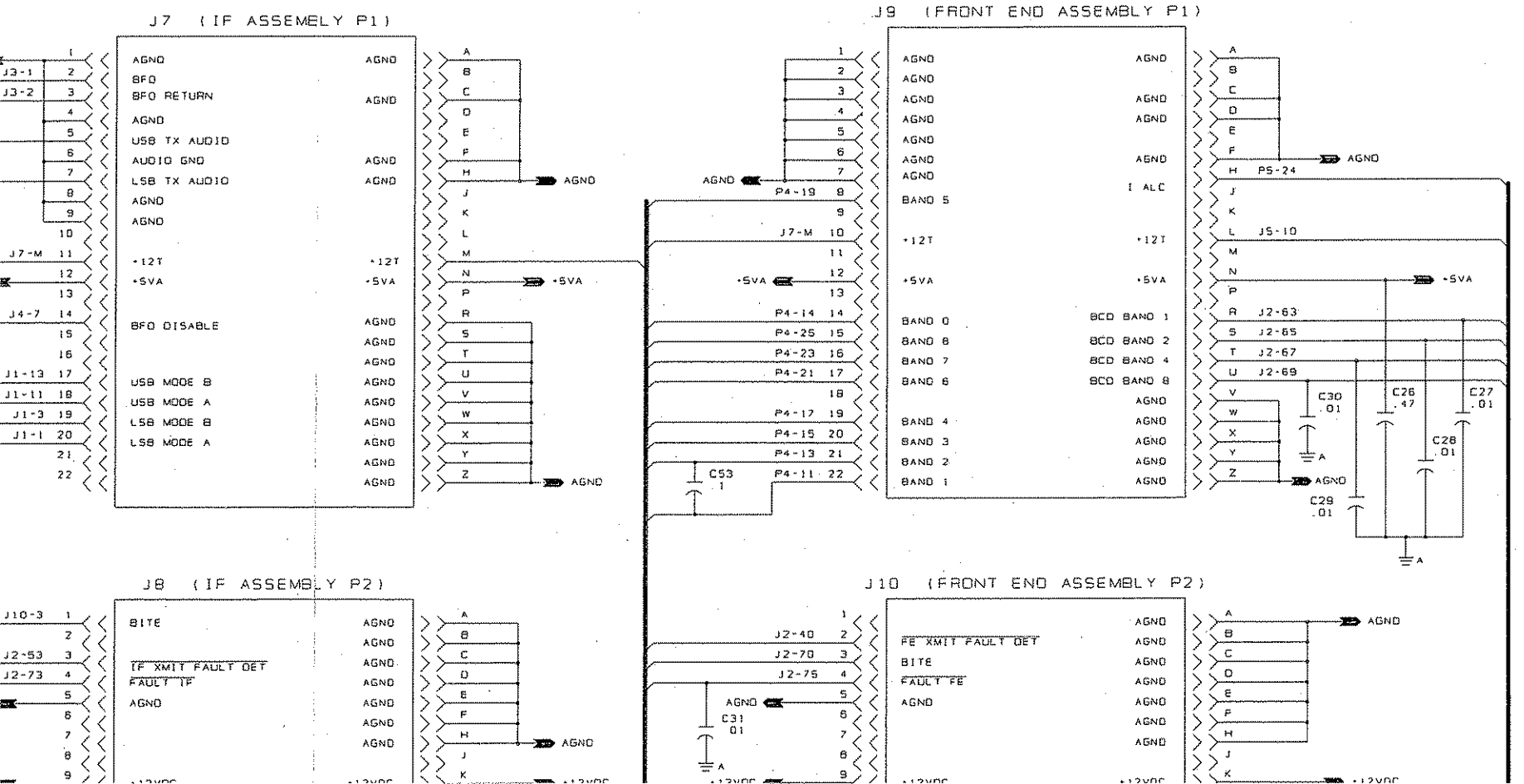
J7 (IF ASSEMELY P1)
AGND
BFO
BFO RETURN
AGND
USB TX AUDIO
AUDIO GND
LSB TX AUDIO
AGND
AGND
+12T
+5VA
BFO DISABLE
USB MODE B
USB MODE A
LSB MODE B
LSB MODE A
J3-1
J3-2
J7-M
J4-7
J1-13
J1-11
J1-3
J1-1
J9 (FRONT END ASSEMBLY P1)
BAND 5
I ALC
BAND 0
BAND 8
BAND 7
BAND 6
BAND 4
BAND 3
BAND 2
BAND 1
BCD BAND 1
BCD BAND 2
BCD BAND 4
BCD BAND 8
P4-19
P4-14
P4-25
P4-23
P4-21
P4-17
P4-15
P4-13
P4-11
C53
.1
P5-24
J5-10
J2-63
J2-65
J2-67
J2-69
C30
.01
C26
.47
C27
.01
C28
.01
C29
.01
J8 (IF ASSEMBLY P2)
BITE
IF XMIT FAULT DET
FAULT IF
AGND
J10-3
J2-53
J2-73
J10 (FRONT END ASSEMBLY P2)
FE XMIT FAULT DET
BITE
FAULT FE
AGND
J2-40
J2-70
J2-75
C31
.01

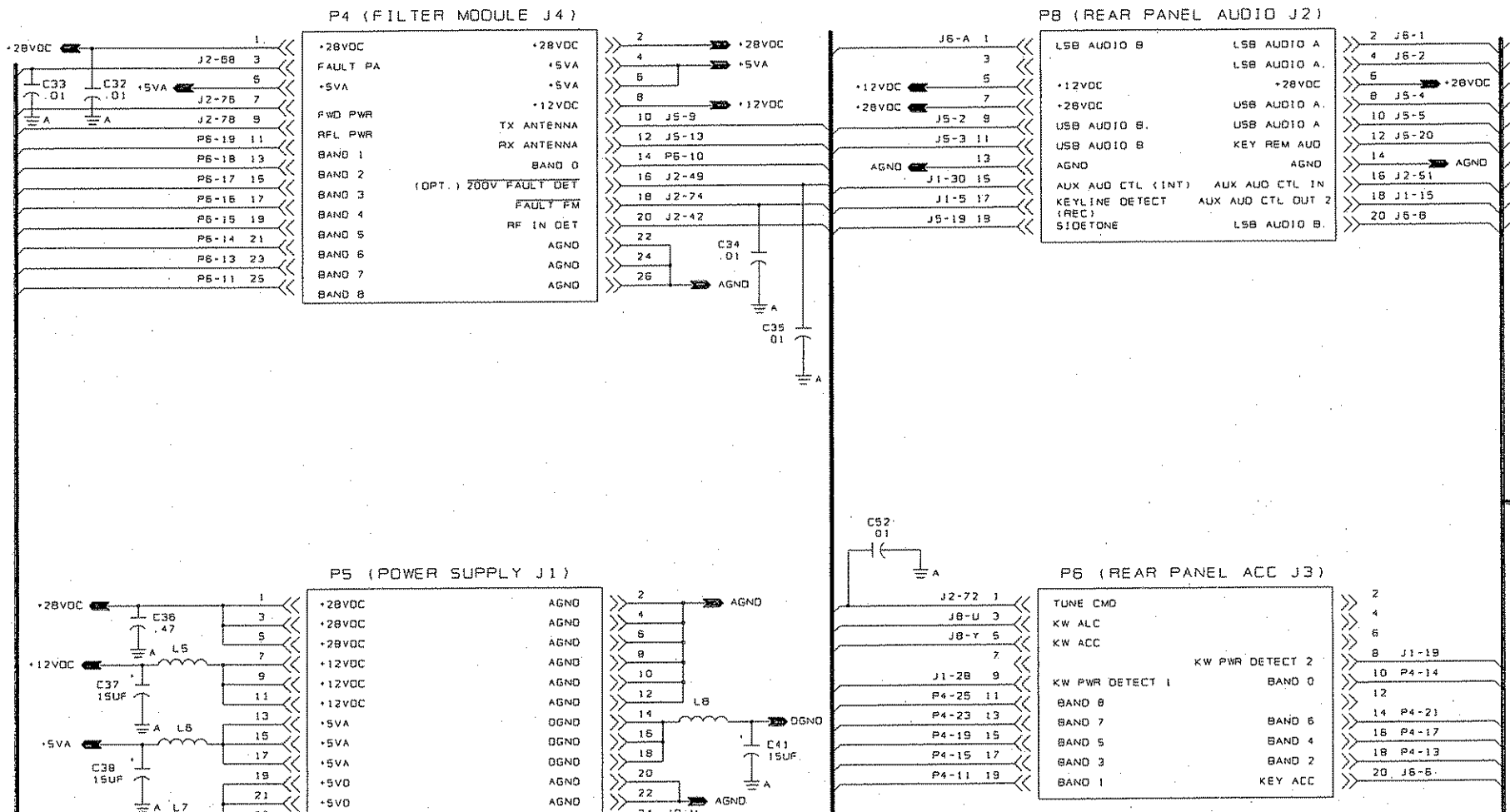
P4 (FILTER MODULE J4)
+28VDC
FAULT PA
+5VA
FWD PWR
RFL PWR
BAND 1
BAND 2
BAND 3
BAND 4
BAND 5
BAND 6
BAND 7
BAND 8
TX ANTENNA
RX ANTENNA
BAND 0
(OPT.) 200V FAULT DET
FAULT PM
RF IN DET
AGND
J2-68
J2-76
J2-78
P6-19
P6-18
P6-17
P6-16
P6-15
P6-14
P6-13
P6-11
J5-9
J5-13
P6-10
J2-49
J2-74
J2-42
C33 .01
C32 .01
C34 .01
C35 01
P8 (REAR PANEL AUDIO J2)
LSB AUDIO B
+12VDC
USB AUDIO B.
USB AUDIO B
AUX AUD CTL (INT)
KEYLINE DETECT (REC)
SIDETONE
LSB AUDIO A
LSB AUDIO A.
+28VDC
USB AUDIO A.
USB AUDIO A
KEY REM AUD
AUX AUD CTL IN
AUX AUD CTL OUT 2
J6-A
J5-2
J5-3
J1-30
J1-5
J5-19
J6-1
J6-2
J5-4
J5-5
J5-20
J2-51
J1-15
J6-8
C52 01
P5 (POWER SUPPLY J1)
+12VDC
+5VA
+5VD
OGND
C36 .47
C37 15UF
C38 15UF
C41 15UF
L5
L6
L7
L8
P6 (REAR PANEL ACC J3)
TUNE CMD
KW ALC
KW ACC
KW PWR DETECT 1
KW PWR DETECT 2
BAND 0
BAND 6
BAND 4
BAND 2
KEY ACC
J2-72
J8-U
J8-Y
J1-28
P4-25
P4-23
P4-19
P4-15
P4-11
J1-19
P4-14
P4-21
P4-17
P4-13
J6-5

X7R, 20%	0281730008	P3	CONNECTOR,HEADER 40 PIN	1010780000	U6	IC. DIGITAL 74HC244	1006460039
X7R, 20%	0281730008	Q1	TRANSISTOR, NPN, SI. 2N4124	0448010003	U7	IC. DIGITAL 74HC373	1006480030
X7R, 20%	0281730008	Q2	TRANSISTOR, NPN, SI. 2N4124	0448010003	U8	IC. DIGITAL 28C64	1010660004
X7R, 20%	0281730008	R3	RESISTOR 1K, 10%, 1/4W	0171560001	U9	IC. DIGITAL 74HC139	1006770038
X7R, 20%	0281730008	R5	RESISTOR 470, 5%, 1/4W	0184110009	U10	IC. DIGITAL 74HC244	1006460039
X7R, 20%	0281730008	R6	RESISTOR 10K, 10%, 1/4W	0170410005	U11	IC. DIGITAL 74HC244	1006460039
X7R, 20%	0281730008	R12	RESISTOR 22K, 5%, 1/4W	0172230004	U12	IC. DIGITAL 74HC374	1006450033
X7R, 20%	0281730008	R13	RESISTOR 10K, 10%, 1/4W	0170410005	U15	IC. DIGITAL 74HC00	1008190004
X7R, 20%	0281730008	R14	RESISTOR 10, 5%, 1/4W	0177160004	U16	IC. DIGITAL 74HC08	1006490019
X7R, 20%	0281730008	R15	RESISTOR 1M, 10%, 1/4W	0170650006	U17	IC. DIGITAL ADC0804	1010670000
X7R, 20%	0281730008	R16	RESISTOR 3.9K, 10%, 1/4W	0178830003	U18	IC. DIGITAL 74HC374	1006450033
X7R, 20%	0281730008	R18	RESISTOR 220, 10%, 1/4W	0171320000	U19	IC. LINEAR LM358	1010680005
X7R, 20%	0281730008	R21	RESISTOR 4.7K, 5%, 1/4W	0170770001	U22	IC. DIGITAL 74HC245	1006470034
X7R, 20%	0281730008	R22	RESISTOR 5.11K, 1%, 1/8W	1003120016	U23	IC. DIGITAL 74HC244	1006460039
X7R, 20%	0281730008	R23	RESISTOR 28K, 1%, 1/8W	1004050038	U24	IC. DIGITAL 4067B	1006800034
X7R, 20%	0281730008	R40	RESISTOR 1.91K, 1%, 1/8W	1008530018	U25	IC. DIGITAL 74HC244	1006460039
X7R, 20%	0281730008	R41	RESISTOR 6.81K, 1%, 1/8W	0196350000	U28	IC. DIGITAL 74HC154	1010160028
X7R, 20%	0281730008	R42	RESISTOR 1.91K, 1%, 1/8W	1008530018	U29	IC. DIGITAL 74HC154	1010160028
X7R, 20%	0281730008	R43	RESISTOR 6.81K, 1%, 1/8W	0196350000	U30	IC. DIGITAL 74HC138	1006480013
X7R, 20%	0281730008	R46	RESISTOR 10K, 1%, 1/8W	1003050026	U32	IC. DIGITAL 74HC374	1006450033
X7R, 20%	0281730008	R47	RESISTOR 10K, 1%, 1/8W	1003050026	U33	IC. DIGITAL 74HC374	1006450033
X7R, 20%	0281730008	R54	RESISTOR 10K, 10%, 1/4W	0170410005	U34	IC. DIGITAL 7417	1003870007
X7R, 20%	0281730008	R55	RESISTOR 470, 5%, 1/4W	0184110009	U35	IC. DIGITAL 74HC374	1006450033
X7R, 20%	0281730008	R56	RESISTOR 15, 10%, 1/4W	0181740001	U36	IC. DIGITAL 74HC374	1006450033
X7R, 20%	0281730008	R79	RESISTOR 10K, 10%, 1/4W	0170410005	U39	IC. DIGITAL 74HC374	1006450033
X7R, 20%	0281730008	R80	RESISTOR 10K, 10%, 1/4W	0170410005	U41	IC. DIGITAL 74HC374	1006450033
X7R, 20%	0281730008	R81	RESISTOR 22K, 5%, 1/4W	0172230004	U42	IC. DIGITAL 74HC374	1006450033
X7R, 20%	0281730008	R88	RESISTOR 5.11K, 1%, 1/8W	1003120016	U45	IC. DIGITAL 74HC14	1006490027
X7R, 20%	0281730008	R89	RESISTOR 5.11K, 1%, 1/8W	1003120016	U46	IC. DIGITAL 74HC244	1006460039
X7R, 20%	0281730008	R90	RESISTOR 2.2K, 5%, 1/4W	0178070009	U47	IC. DIGITAL 74HC14	1006490027
	0281680001	R91	RESISTOR 2.2K, 5%, 1/4W	0178070009	U48	IC. LINEAR 556C/3456	1005620032
RM. 1N270	0405510004	R92	RESISTOR 2.2K, 5%, 1/4W	0178070009	U49	IC. DIGITAL 74HC14	1006490027
1N4454	0405270003	R93	RESISTOR 2.2K, 5%, 1/4W	0178070009	U50	IC. DIGITAL 8259A	1006800018
1N4004	0405180004	R94	RESISTOR 2.2K, 5%, 1/4W	0178070009	U51	IC. DIGITAL 74HC244	1006460039
550-2405	1008480029	R95	RESISTOR 2.2K, 5%, 1/4W	0178070009	U53	IC. DIGITAL 74HC244	1006460039
SUPR. TVS505	1010720007	R96	RESISTOR 2.2K, 5%, 1/4W	0178070009	U54	IC. DIGITAL 74HC374	1006450033
1N5227B	0405250002	R97	RESISTOR 10K, 10%, 1/4W	0170410005	U55	IC. DIGITAL 74HC244	1006460039
1N4454	0405270003	R98	RESISTOR 680, 10%, 1/4W	0176630007	U56	IC. DIGITAL 74HC08	1006490019
OOD,.437LG	1010910019	R99	RESISTOR 10K, 10%, 1/4W	0170410005	U58	IC. DIGITAL 74HC14	1006490027
0 PERM	1010980017	R100	RESISTOR 1.91K, 1%, 1/8W	1008530018	U59	IC. DIGITAL 74HC374	1006450033
OUNT, 11 PIN	1011010119	R101	RESISTOR 6.81K, 1%, 1/8W	0196350000	U60	IC. DIGITAL 74HC192	1010690001
OUNT, 11 PIN	1011010119	R102	RESISTOR 7.87K, 1%, 1/8W	1004090021	U61	IC. DIGITAL 74HC74	1008000019
OUNT, 11 PIN	1011010119	R103	RESISTOR 6.81K, 1%, 1/8W	0196350000	U67	IC. DIGITAL 74HC139	1006770038
OUNT, 11 PIN	1011010119	R104	RESISTOR 1K, 10%, 1/4W	0171560001	U75	IC DIGITAL 5369 REPLACEMENT	1010700006
OUNT, 11 PIN	1011010119	R105	RESISTOR 22K, 5%, 1/4W	0172230004	U77	IC. DIGITAL 2501-4	1010630008

NOTE: NORMAL SETTING FOR S1: SEGMENTS 1 THRU 8, ALL SEGMENTS DEPRESSED TO NUMBERED END. SEE TABLE 5.7.8.1 FOR OPTIONS.

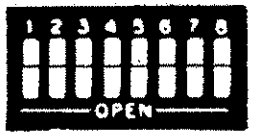

1001CP

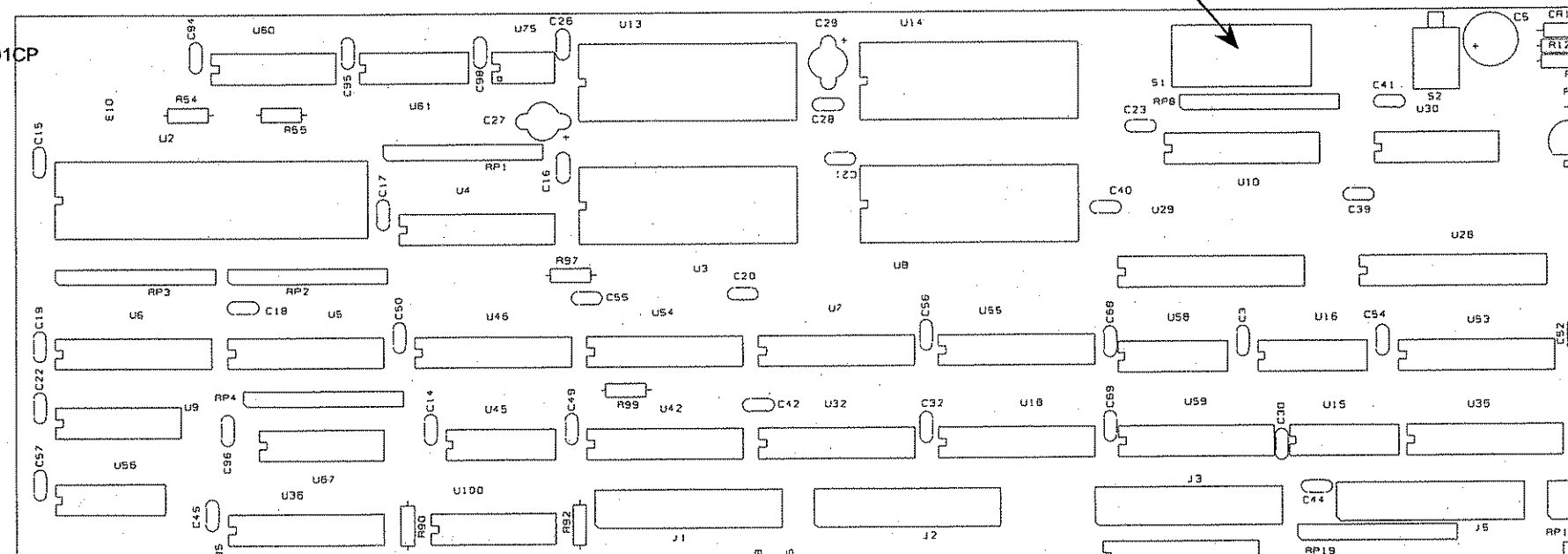

SUNAIR T-9400

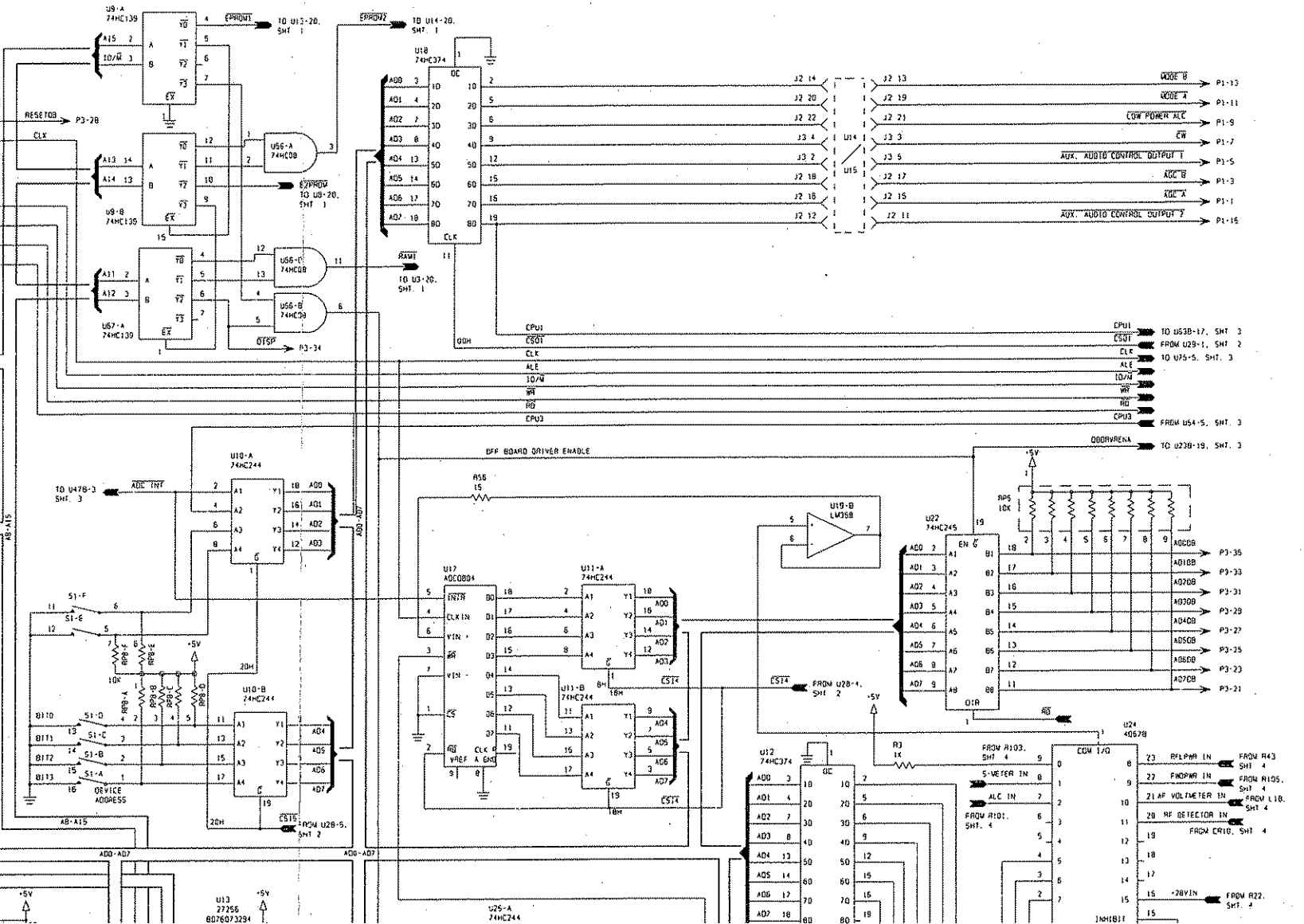

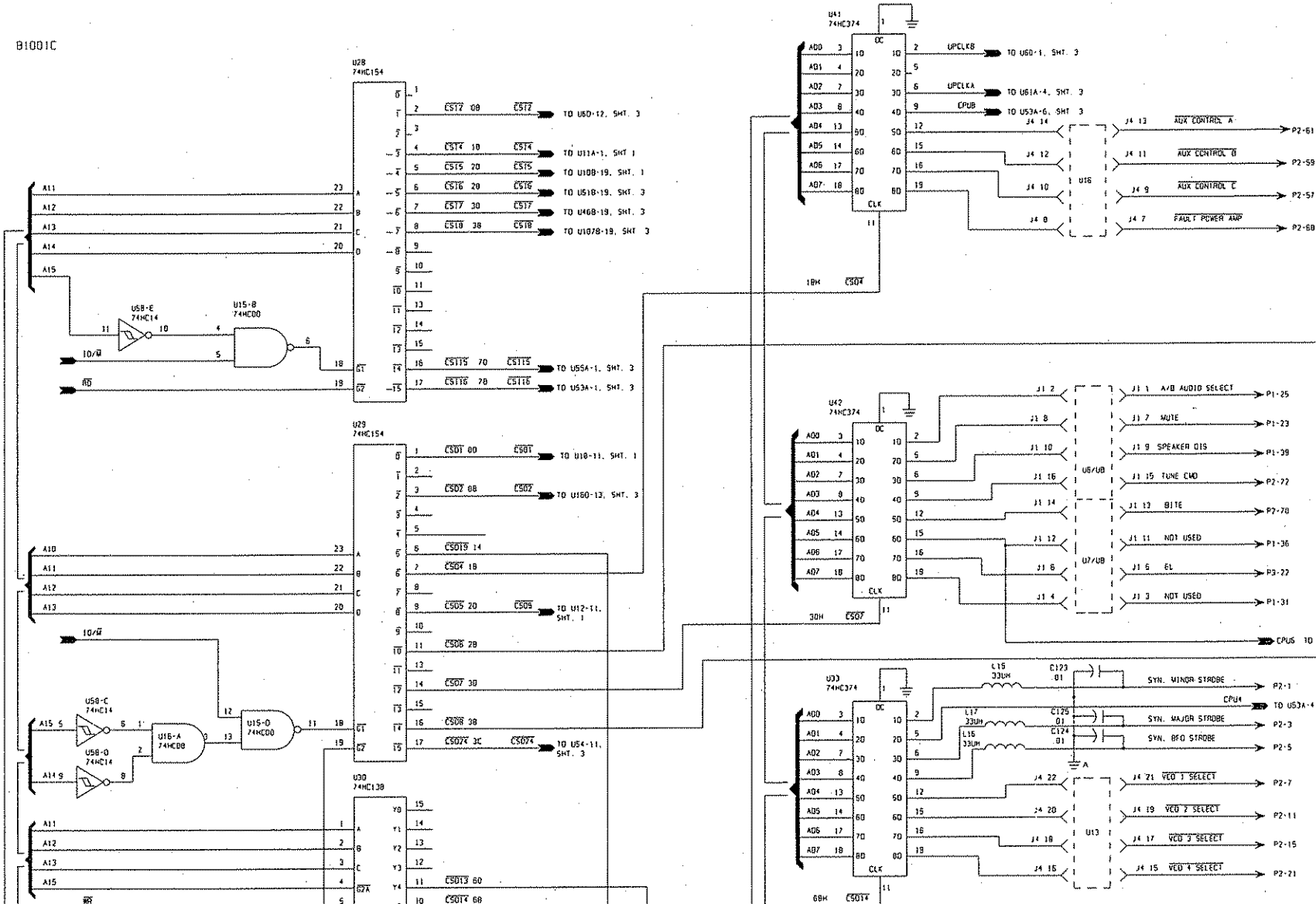
B1001C
U28
74HC154
U29
74HC154
U30
74HC138
U41
74HC374
U42
74HC374
U33
74HC374
U58-E
74HC14
U15-B
74HC00
U58-C
74HC14
U58-D
74HC14
U16-A
74HC00
U15-D
74HC00
U16
U6/U8
U7/U8
U13
TO U60-12, SHT. 3
TO U11A-1, SHT 1
TO U10B-19, SHT. 1
TO U51B-19, SHT. 3
TO U46B-19, SHT. 3
TO U107B-19, SHT 3
TO U55A-1, SHT. 3
TO U53A-1, SHT. 3
TO U10-11, SHT. 1
TO U160-13, SHT. 3
TO U12-11, SHT. 1
TO U54-11, SHT. 3
TO U60-1, SHT. 3
TO U61A-4, SHT. 3
TO U53A-6, SHT 3
AUX CONTROL A
AUX CONTROL B
AUX CONTROL C
FAULT POWER AMP
A/B AUDIO SELECT
MUTE
SPEAKER DIS
TUNE CMD
BITE
NOT USED
EL
NOT USED
SYN. MINOR STROBE
SYN. MAJOR STROBE
SYN. BFO STROBE
VCO 1 SELECT
VCO 2 SELECT
VCO 3 SELECT
VCO 4 SELECT

SUNAIR T-9400

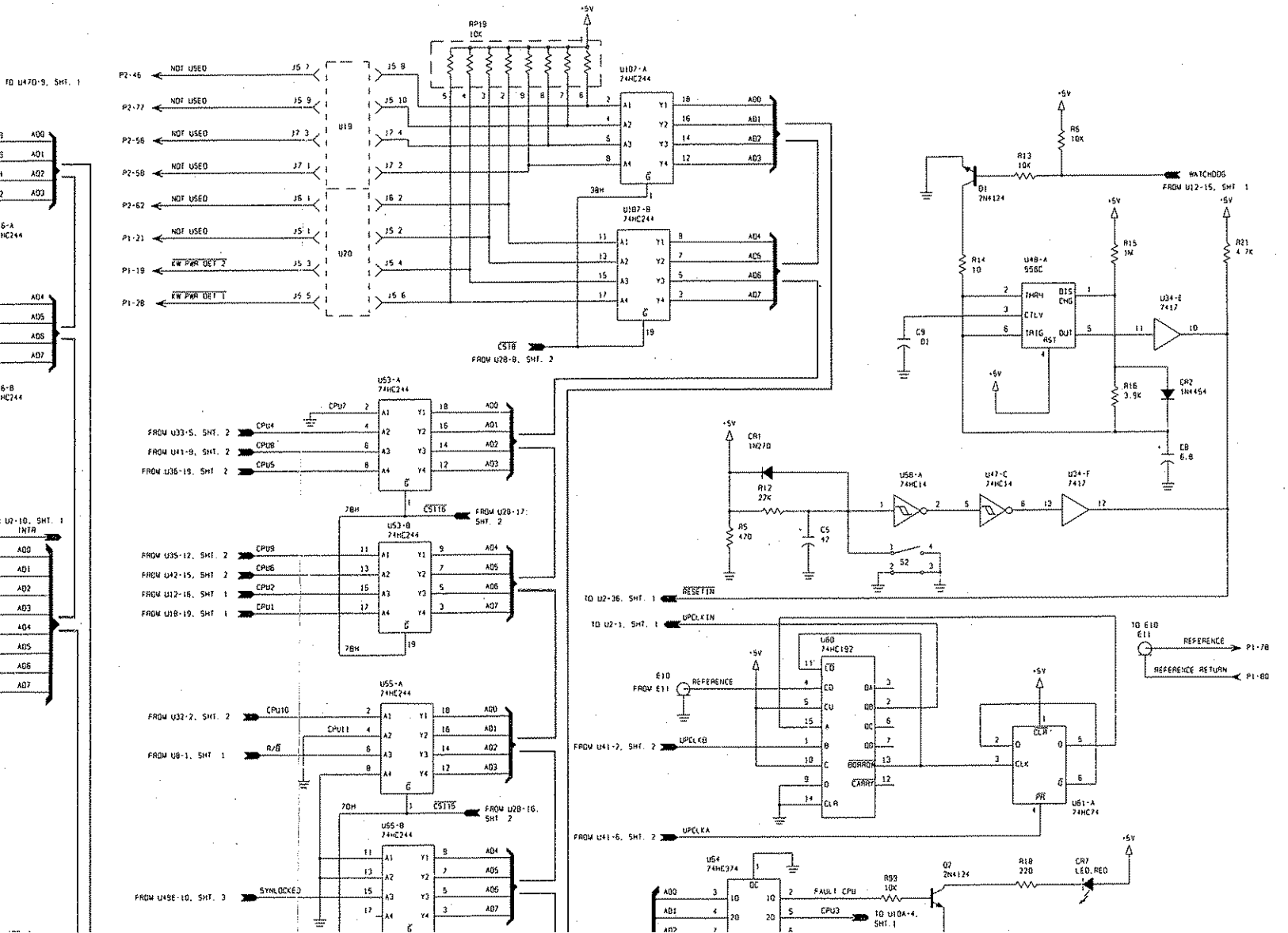

D1001C

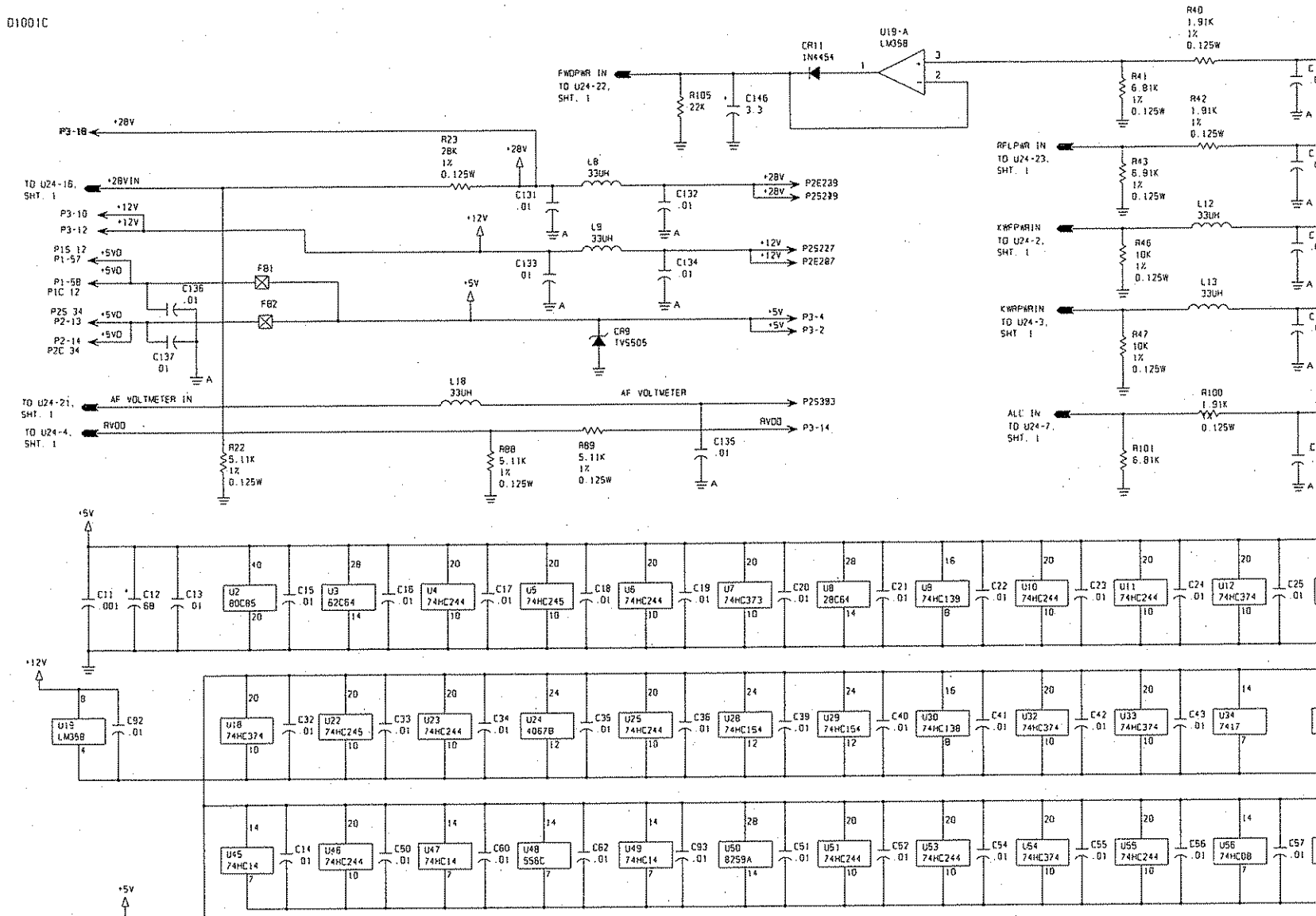
FWDPWR IN
TO U24-22, SHT. 1
CR11 1N4454
U19-A LM358
R105 22K
C146 3.3
R40 1.91K 1% 0.125W
R41 6.81K 1% 0.125W
R42 1.91K 1% 0.125W
RFLPWR IN
TO U24-23, SHT. 1
R43 6.81K 1% 0.125W
L12 33UH
KWFPWRIN
TO U24-2, SHT. 1
R46 10K 1% 0.125W
L13 33UH
KWRPWRIN
TO U24-3, SHT. 1
R47 10K 1% 0.125W
R100 1.91K 0.125W
ALC IN
TO U24-7, SHT. 1
R101 6.81K
P3-18
+28V
TO U24-16, SHT. 1
+28VIN
R23 28K 1% 0.125W
C131 .01
L8 33UH
C132 .01
P2E239
P2S239
P3-10
P3-12
+12V
L9 33UH
C133 .01
C134 .01
P2S227
P2E287
P15 12
P1-57
P1-58
P1C 12
+5VO
C136 .01
F81
F82
C137 .01
P2S 34
P2-13
P2-14
P2C 34
+5V
CR9 TVS505
P3-4
P3-2
TO U24-21, SHT. 1
AF VOLTMETER IN
L18 33UH
AF VOLTMETER
P2S383
TO U24-4, SHT. 1
AVDD
P3-14
R22 5.11K 1% 0.125W
R88 5.11K 1% 0.125W
R89 5.11K 1% 0.125W
C135 .01
C11 .001
C12 68
C13 .01
U2 80C85
C15 .01
U3 62C64
C16 .01
U4 74HC244
C17 .01
U5 74HC245
C18 .01
U6 74HC244
C19 .01
U7 74HC373
C20 .01
U8 28C64
C21 .01
U9 74HC139
C22 .01
U10 74HC244
C23 .01
U11 74HC244
C24 .01
U12 74HC374
C25 .01
U19 LM358
C92 .01
U18 74HC374
C32 .01
U22 74HC245
C33 .01
U23 74HC244
C34 .01
U24 4067B
C35 .01
U25 74HC244
C36 .01
U26 74HC154
C39 .01
U29 74HC154
C40 .01
U30 74HC138
C41 .01
U32 74HC374
C42 .01
U33 74HC374
C43 .01
U34 7417
U45 74HC14
C14 .01
U46 74HC244
C50 .01
U47 74HC14
C60 .01
U48 5580
C62 .01
U49 74HC14
C93 .01
U50 8259A
C51 .01
U51 74HC244
C52 .01
U53 74HC244
C54 .01
U54 74HC374
C55 .01
U55 74HC244
C56 .01
U56 74HC08
C57 .01

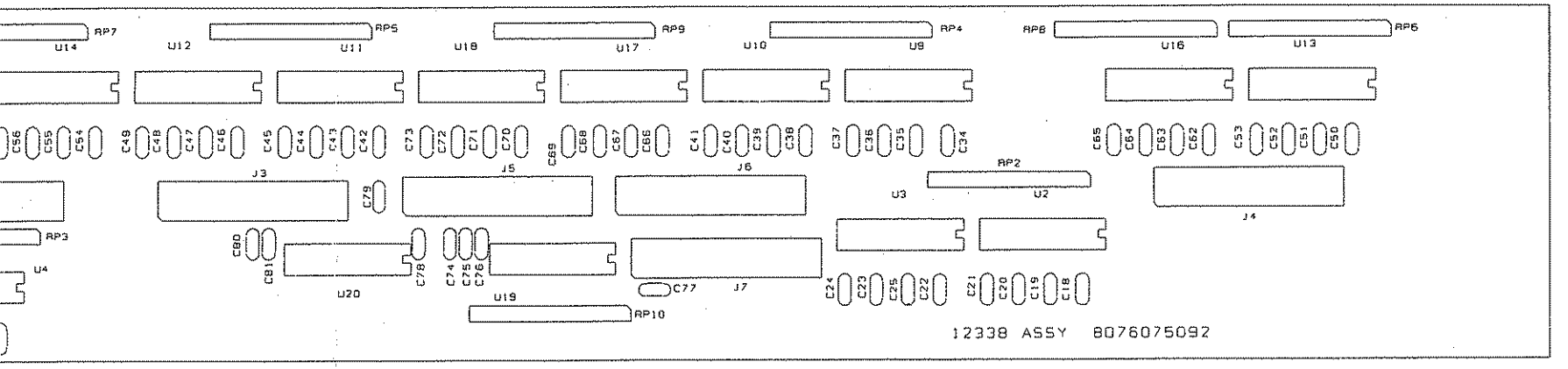

0.01UF, 50V, X7R, 20%	0281730008
0.01UF, 50V, X7R, 20%	0281730008
0.01UF, 50V, X7R, 20%	0281730008
0.01UF, 50V, X7R, 20%	0281730008
0.01UF, 50V, X7R, 20%	0281730008
0.01UF, 50V, X7R, 20%	0281730008
0.01UF, 50V, X7R, 20%	0281730008
0.01UF, 50V, X7R, 20%	0281730008
0.01UF, 50V, X7R, 20%	0281730008
0.01UF, 50V, X7R, 20%	0281730008
0.01UF, 50V, X7R, 20%	0281730008
0.01UF, 50V, X7R, 20%	0281730008
0.01UF, 50V, X7R, 20%	0281730008
0.01UF, 50V, X7R, 20%	0281730008
0.01UF, 50V, X7R, 20%	0281730008
0.01UF, 50V, X7R, 20%	0281730008
0.01UF, 50V, X7R, 20%	0281730008
0.01UF, 50V, X7R, 20%	0281730008
0.01UF, 50V, X7R, 20%	0281730008
0.01UF, 50V, X7R, 20%	0281730008
0.01UF, 50V, X7R, 20%	0281730008
0.01UF, 50V, X7R, 20%	0281730008
0.01UF, 50V, X7R, 20%	0281730008
0.01UF, 50V, X7R, 20%	0281730008
0.01UF, 50V, X7R, 20%	0281730008
0.01UF, 50V, X7R, 20%	0281730008
0.01UF, 50V, X7R, 20%	0281730008
0.01UF, 50V, X7R, 20%	0281730008
0.01UF, 50V, X7R, 20%	0281730008
0.01UF, 50V, X7R, 20%	0281730008
0.01UF, 50V, X7R, 20%	0281730008

J4	HEADER, PIN STRIP, 22 PIN		1010930010
J5	HEADER, PIN STRIP, 22 PIN		1010930010
J6	HEADER, PIN STRIP, 22 PIN		1010930010
J7	HEADER, PIN STRIP, 22 PIN		1010930010
RP1	RES NTWK 10 PIN SIP 680	COM	1010640003
RP2	RES NTWK 10 PIN SIP 680	COM	1010640003
RP3	RES NTWK 10 PIN SIP 680	COM	1010640003
RP4	RES NTWK 10 PIN SIP 680	COM	1010640003
RP5	RES NTWK 10 PIN SIP 680	COM	1010640003
RP6	RES NTWK 10 PIN SIP 680	COM	1010640003
RP7	RES NTWK 10 PIN SIP 680	COM	1010640003
RP8	RES NTWK 10 PIN SIP 680	COM	1010640003
RP9	RES NTWK 10 PIN SIP 680	COM	1010640003
RP10	RES NTWK 10 PIN SIP 680	COM	1010640003
RP11	RES NTWK 10 PIN SIP 10K	COM	1006130021
U1	IC. LINEAR LM340T5		0448600005
U2	IC. DIGITAL 2501-4		1010630008
U3	IC. DIGITAL 2501-4		1010630008
U4	IC. DIGITAL 2501-4		1010630008
U5	IC. DIGITAL 2501-4		1010630008
U6	IC. DIGITAL 2501-4		1010630008
U7	IC. DIGITAL 2501-4		1010630008
U8	IC. DIGITAL UDN-2981		1006330038
U9	IC. DIGITAL 2501-4		1010630008
U10	IC. DIGITAL 2501-4		1010630008

A11518

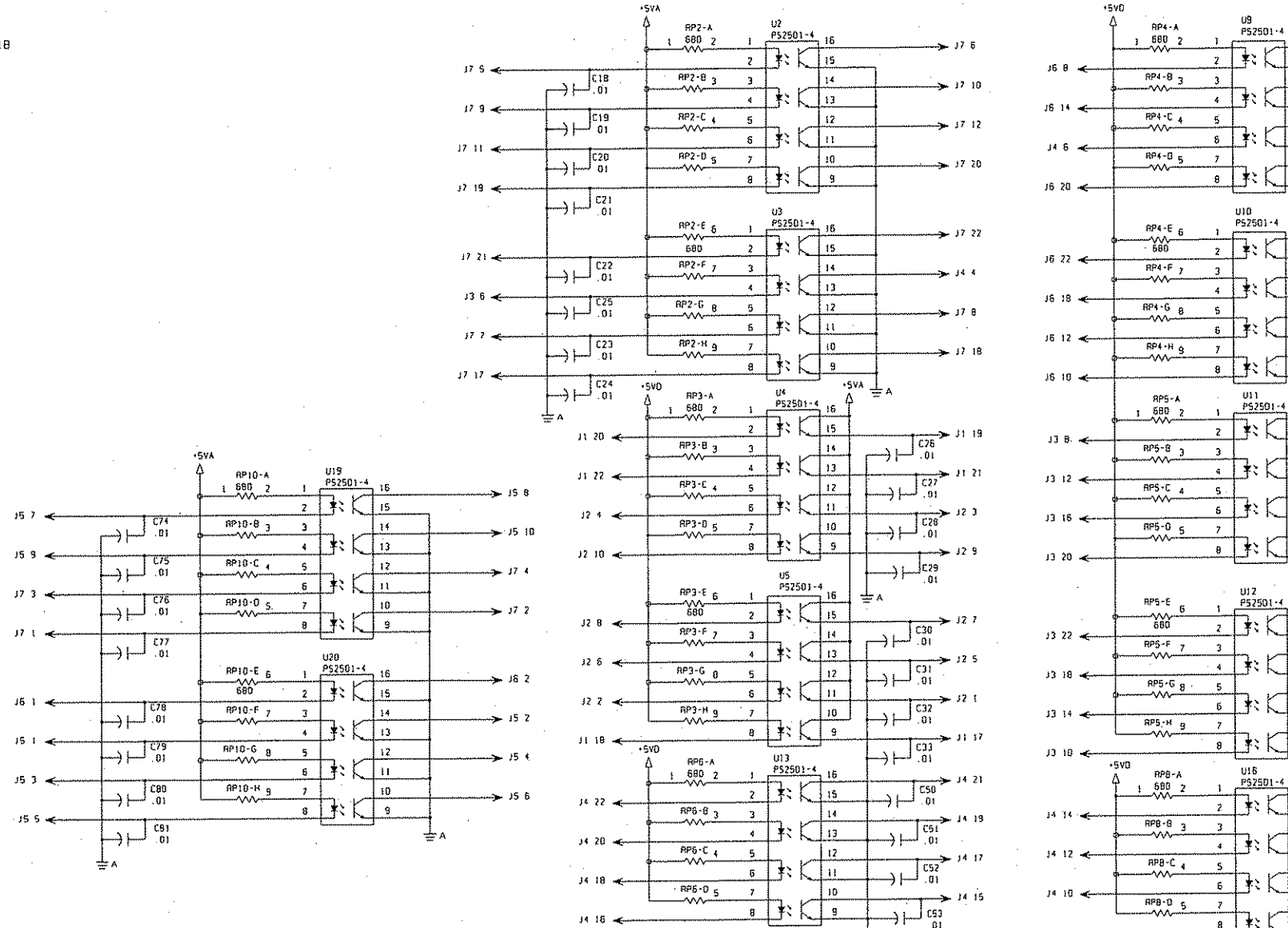
+5VA
+5VD
U2 PS2501-4
U3 PS2501-4
U4 PS2501-4
U5 PS2501-4
U9 PS2501-4
U10 PS2501-4
U11 PS2501-4
U12 PS2501-4
U13 PS2501-4
U16 PS2501-4
U19 PS2501-4
U20 PS2501-4
RP2-A 680
RP2-B
RP2-C
RP2-D
RP2-E 680
RP2-F
RP2-G
RP2-H
RP3-A 680
RP3-B
RP3-C
RP3-D
RP3-E 680
RP3-F
RP3-G
RP3-H
RP4-A 680
RP4-B
RP4-C
RP4-D
RP4-E 680
RP4-F
RP4-G
RP4-H
RP5-A 680
RP5-B
RP5-C
RP5-D
RP5-E 680
RP5-F
RP5-G
RP5-H
RP6-A 680
RP6-B
RP6-C
RP6-D
RP8-A 680
RP8-B
RP8-C
RP8-D
RP10-A 680
RP10-B
RP10-C
RP10-D
RP10-E 680
RP10-F
RP10-G
RP10-H
C18 .01
C19 .01
C20 .01
C21 .01
C22 .01
C25 .01
C23 .01
C24 .01
C26 .01
C27 .01
C28 .01
C29 .01
C30 .01
C31 .01
C32 .01
C33 .01
C50 .01
C51 .01
C52 .01
C53 .01
C74 .01
C75 .01
C76 .01
C77 .01
C78 .01
C79 .01
C80 .01
C81 .01
J7 9
J7 9
J7 11
J7 19
J7 21
J3 6
J7 7
J7 17
J7 6
J7 10
J7 12
J7 20
J7 22
J4 4
J7 8
J7 18
J1 20
J1 22
J2 4
J2 10
J2 8
J2 6
J2 2
J1 18
J1 19
J1 21
J2 3
J2 9
J2 7
J2 5
J2 1
J1 17
J4 22
J4 20
J4 18
J4 16
J4 21
J4 19
J4 17
J4 15
J6 8
J6 14
J4 6
J6 20
J6 22
J6 18
J6 12
J6 10
J3 8
J3 12
J3 16
J3 20
J3 22
J3 18
J3 14
J3 10
J4 14
J4 12
J4 10
J5 7
J5 9
J7 3
J7 1
J6 1
J5 1
J5 3
J5 5
J5 8
J5 10
J7 4
J7 2
J6 2
J5 2
J5 4
J5 6
A

THIS PAGE INTENTIONALLY LEFT BLANK.

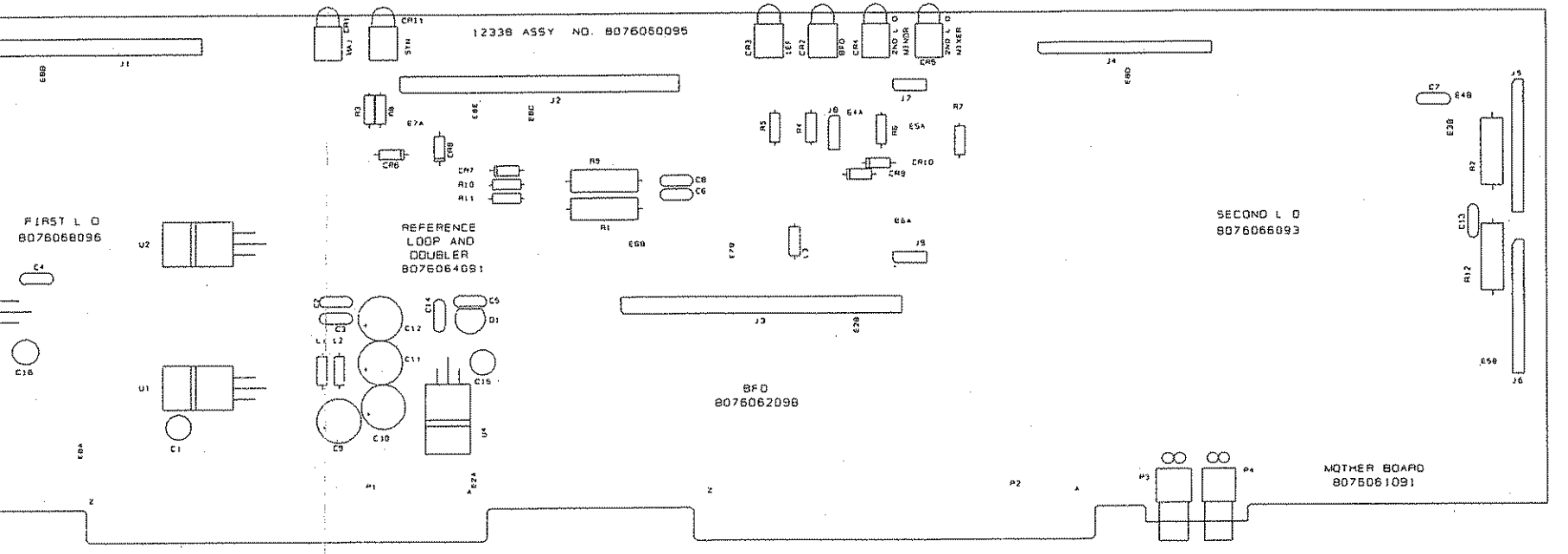

TOR, PC, 22PIN DUAL, FEM	1008830003	
TOR, PC, 22PIN DUAL, FEM	1008830003	
TOR, PC, 22PIN DUAL, FEM	1008830003	
TOR, PC, 22PIN DUAL, FEM	1008830003	
TOR, PC, 22PIN DUAL, FEM	1008830003	
TOR, PC, 22PIN DUAL, FEM	1008830003	

L6	CHOKE, POWER	8076104700
L7	CHOKE, POWER	8076104700
L8	CHOKE, POWER	8076104700
P4	CONNECTOR, RIBBON, 26 PIN FEM	1008340031
P5	CONNECTOR, RIBBON, 26 PIN FEM	1008340031

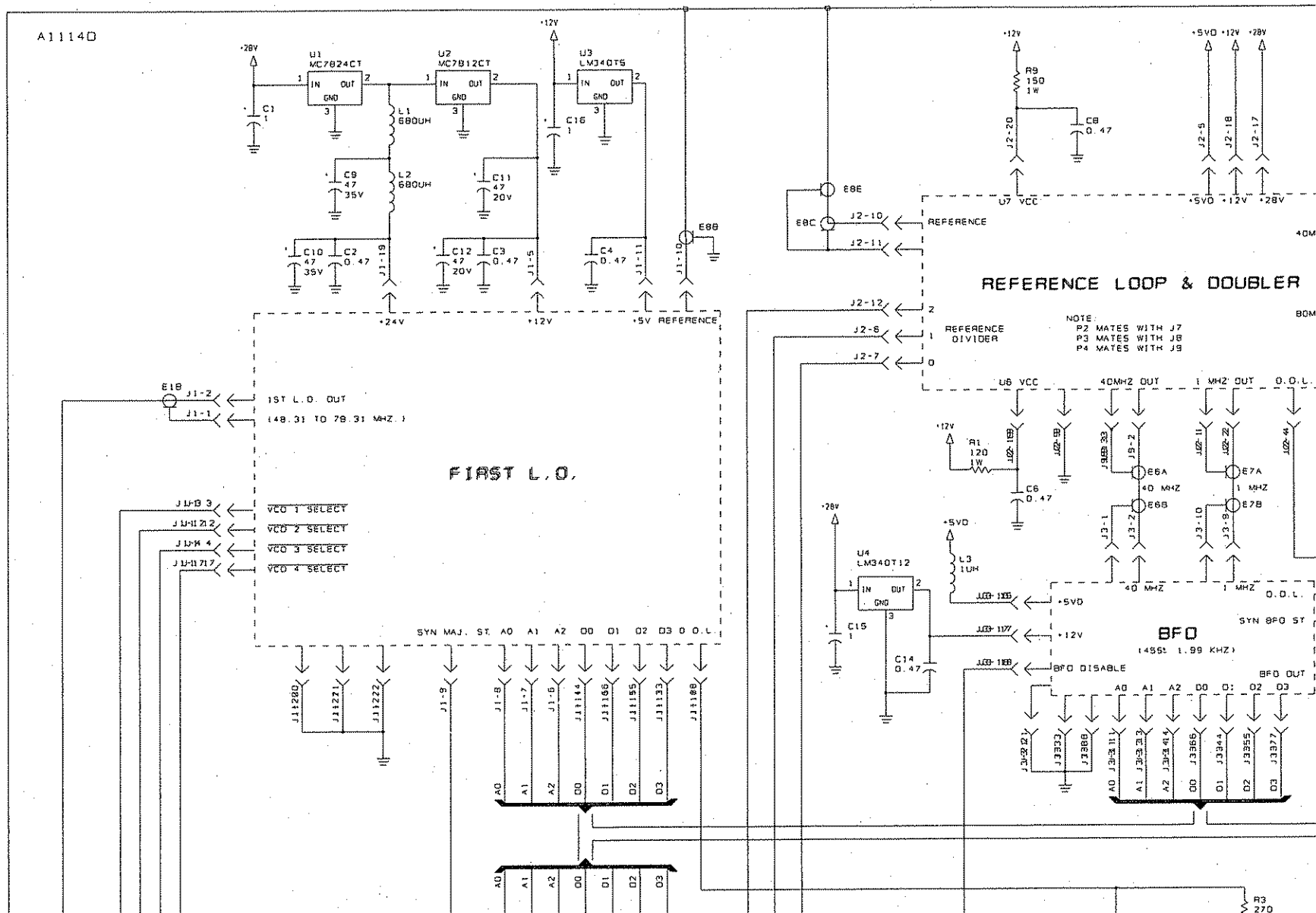
A1114D
U1 MC7824CT
U2 MC7812CT
U3 LM340T5
C1 1
L1 680UH
L2 680UH
C9 47 35V
C11 47 20V
C10 47 35V
C2 0.47
C12 47 20V
C3 0.47
C4 0.47
C16 1
+24V
+12V
+5V REFERENCE
E8E
E8C
E8B
E8
J2-10
J2-11
REFERENCE
R9 150 1W
C8 0.47
U7 VCC
+5VD +12V +28V
REFERENCE LOOP & DOUBLER
J2-12
J2-6
J2-7
REFERENCE DIVIDER
NOTE:
P2 MATES WITH J7
P3 MATES WITH J8
P4 MATES WITH J9
U6 VCC
40MHZ OUT
1 MHZ OUT
O.D.L.
R1 120 1W
C6 0.47
E6A
E6B
E7A
E7B
40 MHZ
1 MHZ
E18
J1-2
J1-1
1ST L.O. OUT
(48.31 TO 78.31 MHZ.)
FIRST L.O.
VCO 1 SELECT
VCO 2 SELECT
VCO 3 SELECT
VCO 4 SELECT
SYN MAJ. ST. A0 A1 A2 D0 D1 D2 D3 O.D.L.
U4 LM340T12
L3 1UH
C15 1
C14 0.47
+5VD
+12V
BFO
(455: 1.99 KHZ)
BFO DISABLE
BFO OUT
SYN BFO ST
R3 270

/, X7R 20%	0281730008
/, X7R 20%	0281730008
1N5235B	0405200005
MV409	1007060018
MV409	1007060018
RIER 5082-2835	0405280009
5082-3168	1005260001
RIER 5082-2835	0405280009
5082-3168	1005260001
MV409	1007060018
MV409	1007060018
MV409	1007060018
MV409	1007060018
RIER 5082-2835	0405280009
5082-3168	1005260001
5082-3168	1005260001
RIER 5082-2835	0405280009
MV409	1007060018
MV409	1007060018
SIL. 1N4454	0405270003
DED, 1.2µH, 5%	0649910001
DED, 1.2µH, 5%	0649910001
DED, 1.2µH, 5%	0649910001
DED, 1.2µH, 5%	0649910001
DED, 1.2µH, 5%	0649910001
DED, 1.2µH, 5%	0649910001
DED, 1.2µH, 5%	0649910001
DED, 1.2µH, 5%	0649910001
DED, 1.2µH, 5%	0649910001
DED, 1.2µH, 5%	0649910001
DED, 1.2µH, 5%	0649910001
DED, 1.2µH, 5%	0649910001
DED, 1.2µH, 5%	0649910001
DED, 1.2µH, 5%	0649910001
DED, 1.2µH, 5%	0649910001
DED, 1.2µH, 5%	0649910001
DED, 1.2µH, 5%	0649910001
DED, 1.2µH, 5%	0649910001
DED, 1.2µH, 5%	0649910001
DED, 1.2µH, 5%	0649910001
DED, 1.2µH, 5%	0649910001
DED, 1.2µH, 5%	0649910001
DED, 1.2µH, 5%	0649910001
DED, 1.2µH, 5%	0649910001

R3	RESISTOR 47, 10%, 1/4W	0179360001
R4	RESISTOR 47, 10%, 1/4W	0179360001
R5	RESISTOR 5.6K, 10%, 1/4W	0183060008
R6	RESISTOR 390, 10%, 1/4W	0178330001
R7	RESISTOR 47, 10%, 1/4W	0179360001
R8	RESISTOR 120, 10%, 1/4W	0186550006
R10	RESISTOR 390, 10%, 1/4W	0178330001
R11	RESISTOR 2.7K, 10%, 1/4W	0186670001
R12	RESISTOR 120, 10%, 1/4W	0186550006
R13	RESISTOR 27K, 10%, 1/4W	0171200004
R14	RESISTOR 100, 5%, 1/4W	0171180003
R15	RESISTOR 100, 5%, 1/4W	0171180003
R16	RESISTOR 10, 5%, 1/4W	0177160004
R17	RESISTOR 47, 10%, 1/4W	0179360001
R18	RESISTOR 1.8K, 10%, 1/4W	0178190004
R19	RESISTOR 6.8K, 5%, 1/4W	0174810008
R20	RESISTOR 10K, 10%, 1/4W	0170410005
R21	RESISTOR 47, 10%, 1/4W	0179360001
R22	RESISTOR 47K, 10%, 1/4W	0171060008
R23	RESISTOR 4.7K, 5%, 1/4W	0170770001
R24	RESISTOR 10K, 10%, 1/4W	0170410005
R25	RESISTOR 10K, 10%, 1/4W	0170410005
R26	RESISTOR 10K, 10%, 1/4W	0170410005
R27	RESISTOR 47, 10%, 1/4W	0179360001
R28	RESISTOR 47, 10%, 1/4W	0179360001
R29	RESISTOR 47K, 10%, 1/4W	0171060008
R30	RESISTOR 120, 10%, 1/4W	0186550006
R31	RESISTOR 1.8K, 10%, 1/4W	0178190004
R32	RESISTOR 120, 10%, 1/4W	0186550006
R33	RESISTOR 47, 10%, 1/4W	0179360001
R34	RESISTOR 47, 10%, 1/4W	0179360001
R35	RESISTOR 10K, 10%, 1/4W	0170410005
R36	RESISTOR 1.8K, 10%, 1/4W	0178190004
R37	RESISTOR 47K, 10%, 1/4W	0171060008
R38	RESISTOR 10K, 10%, 1/4W	0170410005
R39	RESISTOR 10K, 10%, 1/4W	0170410005
R40	RESISTOR 47K, 10%, 1/4W	0171060008
R41	RESISTOR 1.8K, 10%, 1/4W	0178190004
R42	RESISTOR 10K, 10%, 1/4W	0170410005
R43	RESISTOR 47, 10%, 1/4W	0179360001
R44	RESISTOR 47, 10%, 1/4W	0179360001
R45	RESISTOR 820, 10%, 1/4W	0178210005
R46	RESISTOR 120, 10%, 1/4W	0186550006

1111FP

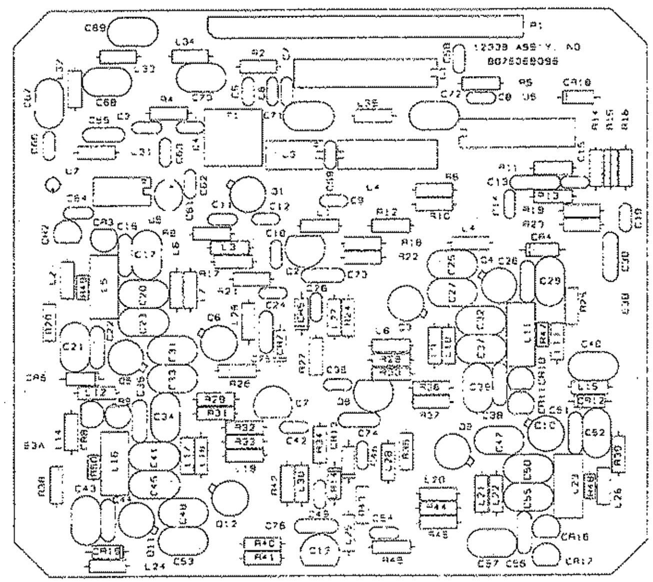

A1111I

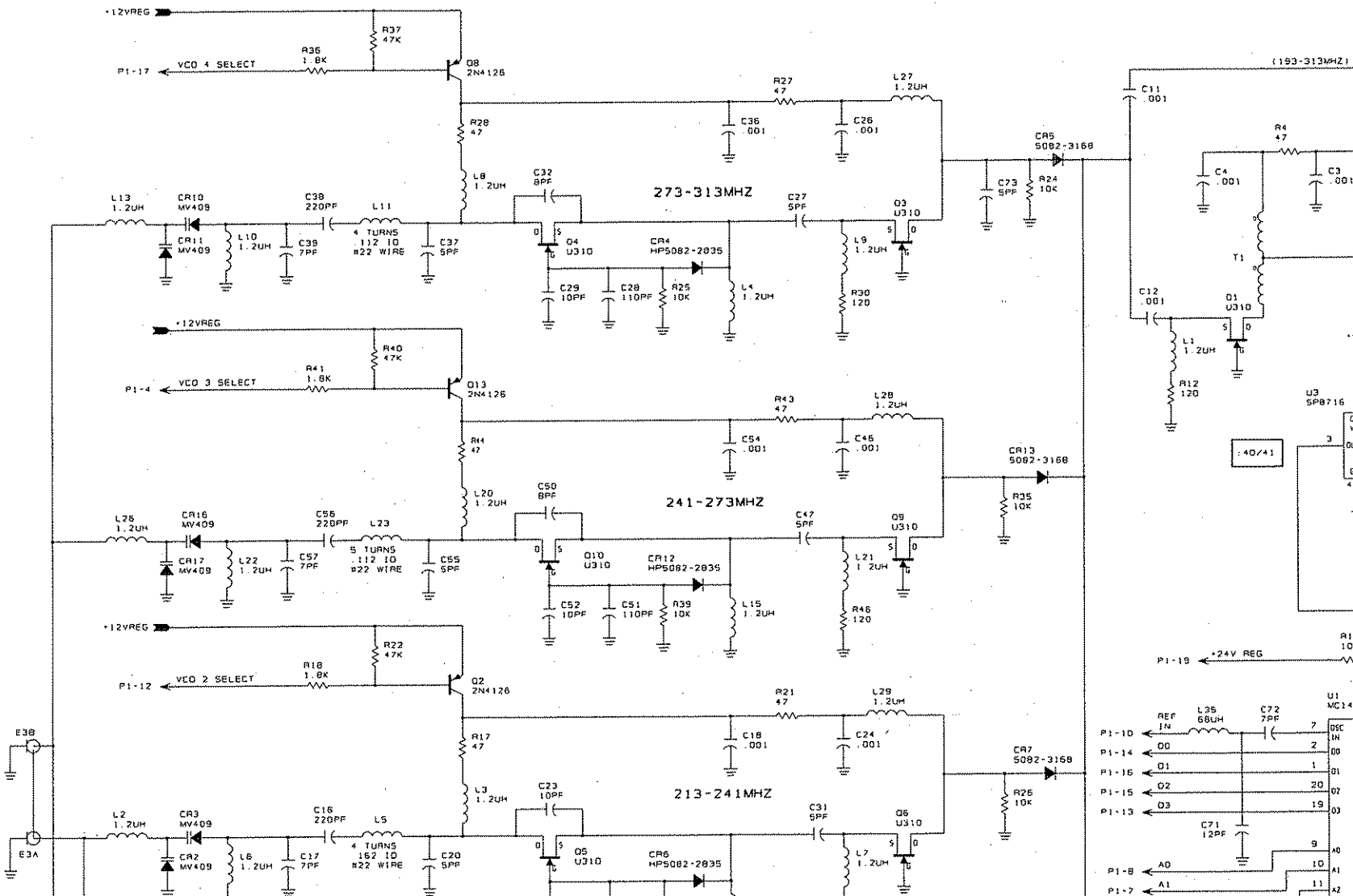
+12VREG
P1-17
VCO 4 SELECT
R36 1.8K
R37 47K
Q8 2N4126
R27 47
L27 1.2UH
C36 .001
C26 .001
R28 47
L8 1.2UH
C32 8PF
273-313MHZ
C27 5PF
Q3 U310
Q4 U310
CR4 HP5082-2835
L9 1.2UH
R30 120
C29 10PF
C28 110PF
R25 10K
L4 1.2UH
L13 1.2UH
CR10 MV409
CR11 MV409
L10 1.2UH
C38 220PF
C39 7PF
L11
4 TURNS .112 ID #22 WIRE
C37 5PF
CR5 5082-3160
C73 5PF
R24 10K
(193-313MHZ)
C11 .001
R4 47
C4 .001
C3 .001
T1
C12 .001
Q1 U310
L1 1.2UH
R12 120
+12VREG
P1-4
VCO 3 SELECT
R41 1.8K
R40 47K
Q13 2N4126
R43 47
L28 1.2UH
C54 .001
C46 .001
R14 47
L20 1.2UH
C50 8PF
241-273MHZ
C47 5PF
Q9 U310
Q10 U310
CR12 HP5082-2835
L21 1.2UH
R46 120
C52 10PF
C51 110PF
R39 10K
L15 1.2UH
L26 1.2UH
CR16 MV409
CR17 MV409
L22 1.2UH
C56 220PF
C57 7PF
L23
5 TURNS .112 ID #22 WIRE
C55 5PF
CR13 5082-3160
R35 10K
U3 SP8716
:40/41
+12VREG
P1-12
VCO 2 SELECT
R18 1.8K
R22 47K
Q2 2N4126
R21 47
L29 1.2UH
C18 .001
C24 .001
R17 47
L3 1.2UH
C23 10PF
213-241MHZ
C31 5PF
Q6 U310
Q5 U310
CR6 HP5082-2835
L7 1.2UH
R26 10K
CR7 5082-3160
E3B
E3A
L2 1.2UH
CR3 MV409
CR2 MV409
L6 1.2UH
C16 220PF
C17 7PF
L5
4 TURNS .162 ID #22 WIRE
C20 5PF
P1-19
+24V REG
U1 MC14
REF IN
L35 68UH
C72 7PF
C71 12PF
P1-10
P1-14
P1-16
P1-15
P1-13
D0
D1
D2
D3
P1-8
P1-7
A0
A1

THIS PAGE INTENTIONALLY LEFT BLANK.

PC ASSY, SECOND LO, 1A2A2A2

	PC ASSY, SECOND L.O. 1A2A2A2	8076066093
C1	CAP. .01µF, 50V, X7R 20%	0281730008
C2	CAP. 0.001µF, 100V, X7R, 20%	0281630003
C3	CAP. .47µF, 50V, X7R 20%	0283377771
C4	CAP. 33PF, 500V, DM10, 5%	0260780006
C5	CAP. .01µF, 50V, X7R 20%	0281730008
C7	CAP. 150PF, 500V, DM10, 5%	0293430004
C8	CAP. 200PF, 500V, DM10, 5%	0293050007
C9	CAP. 0.047 µF, 50V, X7R, 10%	1010740008
C10	CAP. 0.001µF, 100V, X7R, 20%	0281630003
C11	CAP. 0.1µF, 50V, X7R, 20%	0281610002
C12	CAP. 5PF, 500V, DM10	0261190008
C13	CAP. 20PF, 500V, DM10, 5%	0260420000
C14	CAP. 36PF, 500V, DM10, 5%	0293550000
C15	CAP. 2PF, 500V, DM10	0259710008
C16	CAP. 150PF, 500V, DM10, 5%	0293430004
C17	CAP. 620PF, 300V, DM15, 2%	0282280006
C18	CAP. 0.001µF, 100V, X7R, 20%	0281630003
C19	CAP. 22µF, 15V, T368	0296660001
C20	CAP. 10PF, 500V, DM10	0259830003
C21	CAP. .01µF, 50V, X7R 20%	0281730008
C22	CAP. 36PF, 500V, DM10, 5%	0293550000
C23	CAP. 200PF, 500V, DM10, 5%	0293050007
C24	CAP. .01µF, 50V, X7R 20%	0281730008
C25	CAP. 5PF, 500V, DM10	0261190008
C26	CAP. .01µF, 50V, X7R 20%	0281730008
C27	CAP. .01µF, 50V, X7R 20%	0281730008
C28	CAP. 0.1µF, 50V, X7R, 20%	0281610002
C30	CAP. .01µF, 50V, X7R 20%	0281730008
C31	CAP. .01µF, 50V, X7R 20%	0281730008
C32	CAP. .01µF, 50V, X7R 20%	0281730008
C33	CAP. 430PF, 500V, DM15, 2%	0282370005
C34	CAP. .01µF, 50V, X7R 20%	0281730008
C35	CAP. 50PF, 500V, DM10, 2%	0260040002
C36	CAP. 120PF, 500V, DM10, 2%	0292880006
C37	CAP. 430PF, 500V, DM15, 2%	0282370005
C38	CAP. 120PF, 500V, DM10, 2%	0292880006
C39	CAP. .01µF, 50V, X7R 20%	[illegible]

C61	CAP. 68PF, 500V, DM10, 5%	0261070002
C64	CAP. 0.1µF, 50V, X7R, 20%	0281610002
C65	CAP. 0.1µF, 50V, X7R, 20%	0281610002
C66	CAP. 0.1µF, 50V, X7R, 20%	0281610002
C67	CAP. 0.1µF, 50V, X7R, 20%	0281610002
C68	CAP. .01µF, 50V, X7R 20%	0281730008
C69	CAP. 0.1µF, 50V, X7R, 20%	0281610002
C70	CAP. .01µF, 50V, X7R 20%	0281730008
C71	CAP. .01µF, 50V, X7R 20%	0281730008
C73	CAP. 0.1µF, 50V, X7R, 20%	0281610002
C74	CAP. .01µF, 50V, X7R 20%	0281730008
C75	CAP. .01µF, 50V, X7R 20%	0281730008
C76	CAP. 100PF, 500V, DM10, 5%	0274747774
CR1	DIODE, VARICAP MV2110	0405290004
CR2	DIODE, VARICAP MV2110	0405290004
CR4	DIODE, SIGNAL, SIL. 1N4454	0405270003
CR5	DIODE, SIGNAL, SIL. 1N4454	0405270003
CR6	DIODE, VARICAP MV2110	0405290004
CR7	DIODE, VARICAP MV2110	0405290004
CR8	DIODE, SIGNAL, SIL. 1N4454	0405270003
CR9	DIODE, SIGNAL, SIL. 1N4454	0405270003
L1	INDUCTOR, MOLDED, 4.7µH, 10%	0564250007
L2	INDUCTOR, VAR. .062-.078 µH	1007070030
L3	INDUCTOR, MOLDED, .33µH, 10%	0664200001
L4	INDUCTOR, MOLDED, 1.2µH, 5%	0649910001
L5	INDUCTOR, MOLDED, 1.2µH, 5%	0649910001
L6	INDUCTOR, MOLDED, 4.7µH, 10%	0564250007
L7	INDUCTOR, MOLDED 0.15 µH	1009470001
L8	INDUCTOR, MOLDED, 22µH, 5%	0650000005
L9	INDUCTOR, MOLDED, 4.7µH, 10%	0564250007
L10	INDUCTOR, MOLDED, .33µH, 10%	0664200001
L12	INDUCTOR, MOLDED, 22µH, 5%	0650000005
L13	INDUCTOR, MOLDED, 1.2µH, 5%	0649910001
L14	INDUCTOR, MOLDED, 10µH, 5%	0659570009
L15	INDUCTOR, MOLDED, 1.2µH, 5%	0649910001
L16	INDUCTOR, MOLDED, 10µH, 5%	0659570009
L17	INDUCTOR, MOLDED, 0.22µH, 5%	0650620003
L18	INDUCTOR, VAR. .082-.114 µH	1007080027
L19	INDUCTOR, MOLDED, 4.7µH, 10%	0564250007
L20	[illegible]	[illegible]

R12	RESISTOR 220, 5%	[illegible]
R13	RESISTOR 1K, 5%,	[illegible]
R14	RESISTOR 18, 5%,	[illegible]
R15	RESISTOR 270, 5%	[illegible]
R16	RESISTOR 10K, 5%	[illegible]
R17	RESISTOR 3.3K, 5%	[illegible]
R18	RESISTOR 100, 5%	[illegible]
R19	RESISTOR 10, 5%	[illegible]
R20	RESISTOR 18, 5%,	[illegible]
R21	RESISTOR 270, 5%	[illegible]
R22	RESISTOR 100, 5%	[illegible]
R25	RESISTOR 270, 5%	[illegible]
R26	RESISTOR 100, 5%	[illegible]
R27	RESISTOR 100K, 5	[illegible]
R28	RESISTOR 18, 5%,	[illegible]
R29	RESISTOR 100, 5%	[illegible]
R30	RESISTOR 270, 5%	[illegible]
R31	RESISTOR 180, 5%	[illegible]
R32	RESISTOR 270, 5%	[illegible]
R33	RESISTOR 6.8K, 5%,	[illegible]
R34	RESISTOR 470, 5%	[illegible]
R35	RESISTOR 4.7K, 5	[illegible]
R36	RESISTOR 3.3K, 5%	[illegible]
R37	RESISTOR 3.3K, 5%	[illegible]
R38	RESISTOR 100, 5%	[illegible]
R39	RESISTOR 18, 5%,	[illegible]
R40	RESISTOR 270, 5%,	[illegible]
R41	RESISTOR 270, 5%,	[illegible]
R42	RESISTOR 10, 5%,	[illegible]
R43	RESISTOR 470, 5%,	[illegible]
R44	RESISTOR 3.3K, 5%	[illegible]
R45	RESISTOR 2.7K, 5%	[illegible]
R46	RESISTOR 10K, 5%	[illegible]
R47	RESISTOR 3.3K, 5%	[illegible]
R48	RESISTOR 5.6K, 5%	[illegible]
R49	RESISTOR 2.7K, 5%	[illegible]
R50	RESISTOR 470, 5%,	[illegible]
R51	RESISTOR 2.7K, 5%	[illegible]
R52	RESISTOR 390, 5%	[illegible]

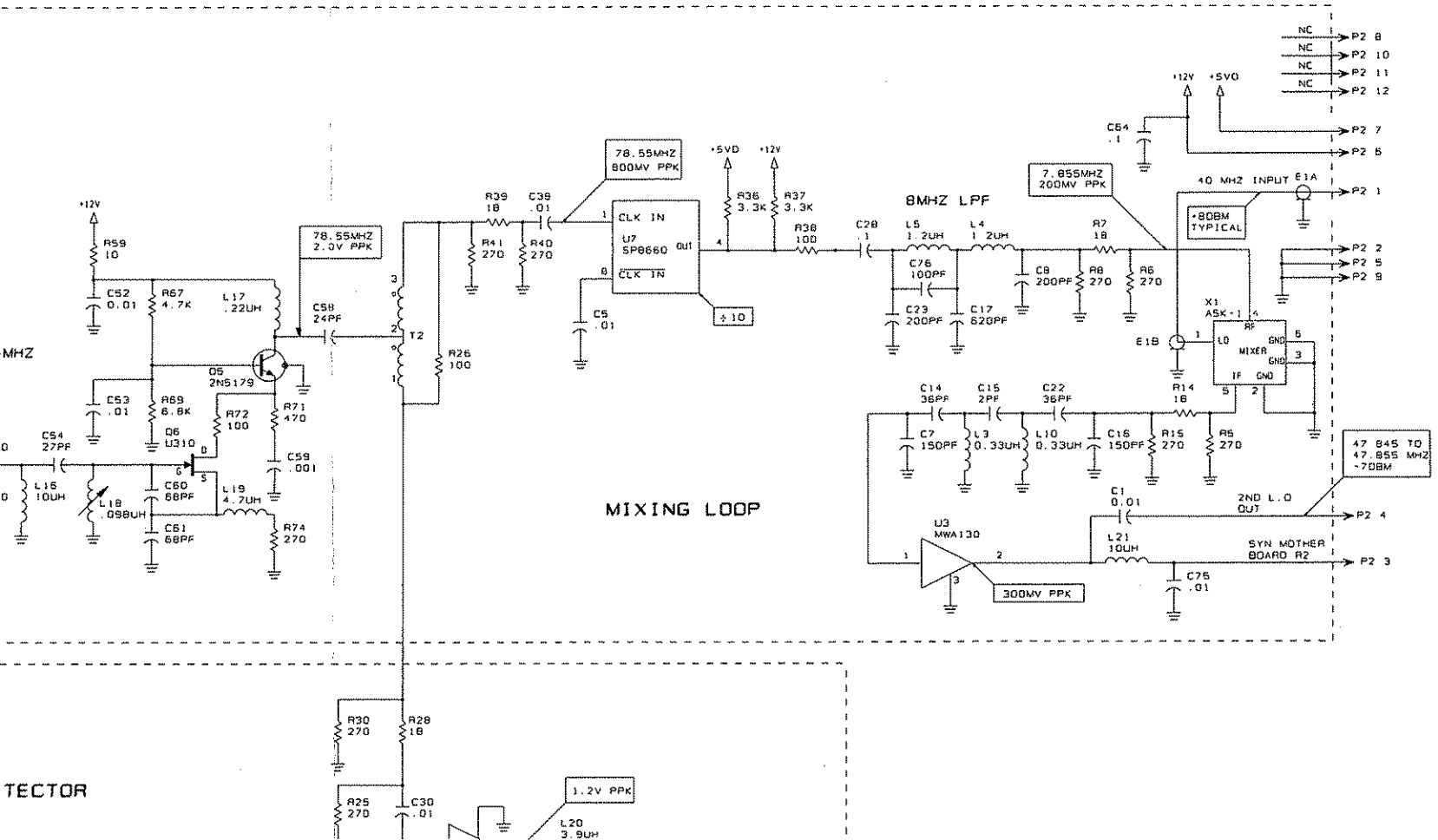
MIXING LOOP
8MHZ LPF
TECTOR
78.55MHZ 800MV PPK
78.55MHZ 2.0V PPK
7.855MHZ 200MV PPK
40 MHZ INPUT
-80BM TYPICAL
47.845 TO 47.855 MHZ -70BM
2ND L.O OUT
SYN MOTHER BOARD R2
300MV PPK
1.2V PPK
CLK IN
U7 SP8660
÷10
X1 ASK-1
MIXER
U3 MWA130
Q5 2N5179
Q6 U310
E1A
E1B
+12V
+5VD
NC
P2 8
P2 10
P2 11
P2 12
P2 7
P2 6
P2 1
P2 2
P2 5
P2 9
P2 4
P2 3

B1110D

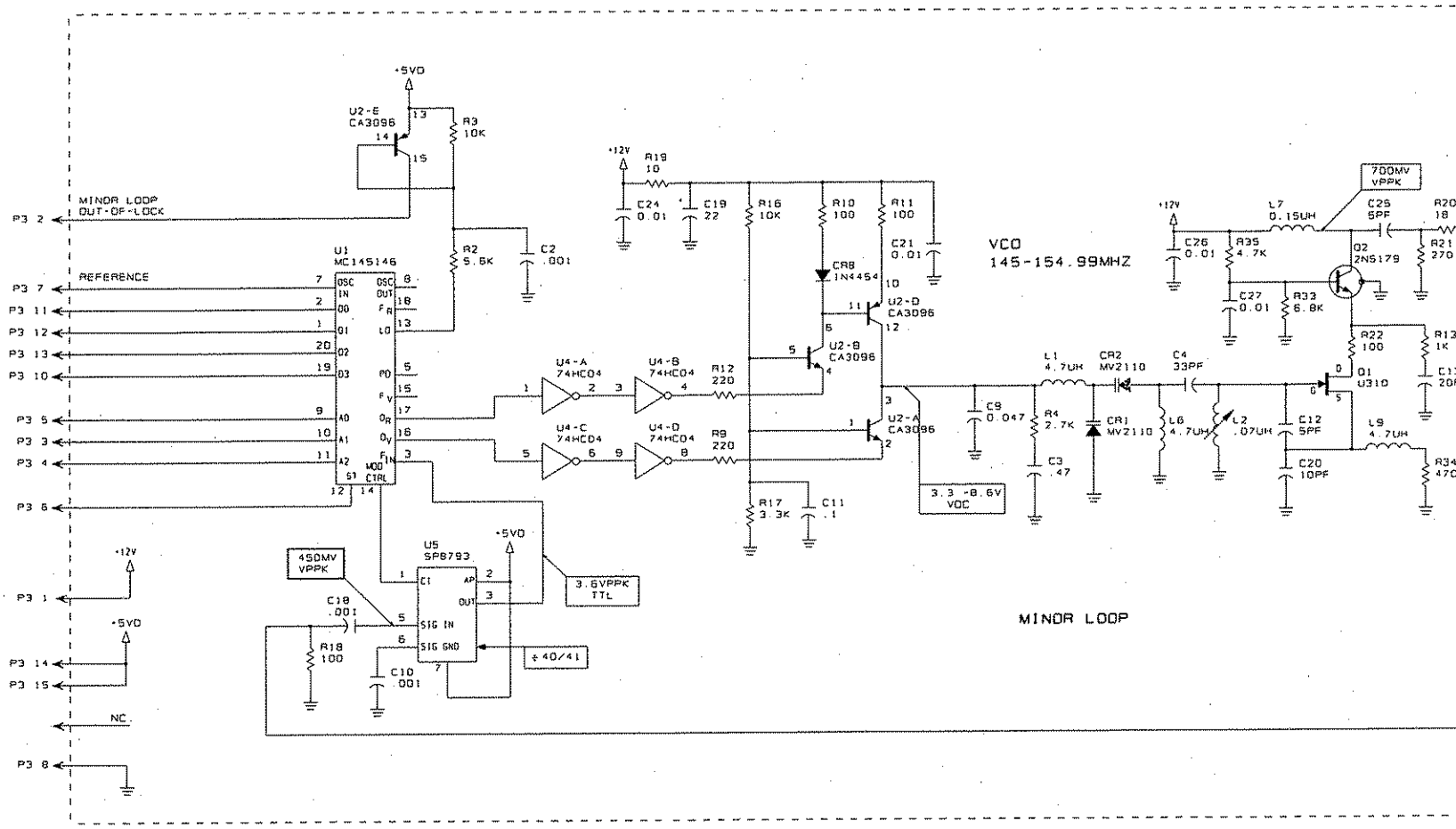
MINOR LOOP
OUT-OF-LOCK
REFERENCE
P3 2
P3 7
P3 11
P3 12
P3 13
P3 10
P3 5
P3 3
P3 4
P3 6
P3 1
P3 14
P3 15
NC
P3 8
+5VD
+12V
U2-E
CA3096
R3
10K
R2
5.6K
C2
.001
U1
MC145146
OSC IN
OSC OUT
DO
D1
D2
D3
A0
A1
A2
S1
MOD CTRL
FR
LD
PD
FV
OR
OV
FIN
U5
SP8793
C1
AP
OUT
SIG IN
SIG GND
450MV
VPPK
C18
.001
R18
100
C10
.001
÷40/41
3.6VPPK
TTL
U4-A
74HC04
U4-B
74HC04
U4-C
74HC04
U4-D
74HC04
R12
220
R9
220
R19
10
C24
0.01
C19
22
R16
10K
R10
100
R11
100
C21
0.01
CR8
1N4454
U2-D
CA3096
U2-B
CA3096
U2-A
CA3096
R17
3.3K
C11
.1
VCO
145-154.99MHZ
3.3 -8.6V
VOC
C9
0.047
R4
2.7K
C3
.47
L1
4.7UH
CR1
MV2110
CR2
MV2110
C4
33PF
L6
4.7UH
L2
.07UH
C12
5PF
C20
10PF
L7
0.15UH
C26
0.01
R35
4.7K
C27
0.01
R33
6.8K
700MV
VPPK
C25
5PF
Q2
2N5179
R22
100
Q1
U310
L9
4.7UH
R20
18
R21
270
R13
1K
R34
470

+5VD

, 1/8W	1010801031
%, 1/8W	1010801040
, 1/8W	1010801015
, 1/8W	1010804715
, 1/8W	1010804715
%, 1/8W	1010801830
%, 1/8W	1010802224
, 1/8W	1010801007
%, 1/8W	1010802224
%, 1/8W	1010804723
, 1/8W	1010801031
%, 1/8W	1010801236
, 1/8W	1010801031
%, 1/8W	1010801210
, 1/8W	1010801031
%, 1/8W	1010801040
%, 1/8W	1010801236
, 1/8W	1010801031
%, 1/8W	1010804723
, 1/8W	1010803301
%, 1/8W	1010805614
, 1/8W	1010801813
%, 1/8W	1010805614
%, 1/8W	1010805614
, 1/8W	1010803301
%, 1/8W	1010805614
, 1/8W	1010801015
, 4:1	1010860003
C145145	1007100001
CA3096	1005860033
P8792A	1007100028

1108AP

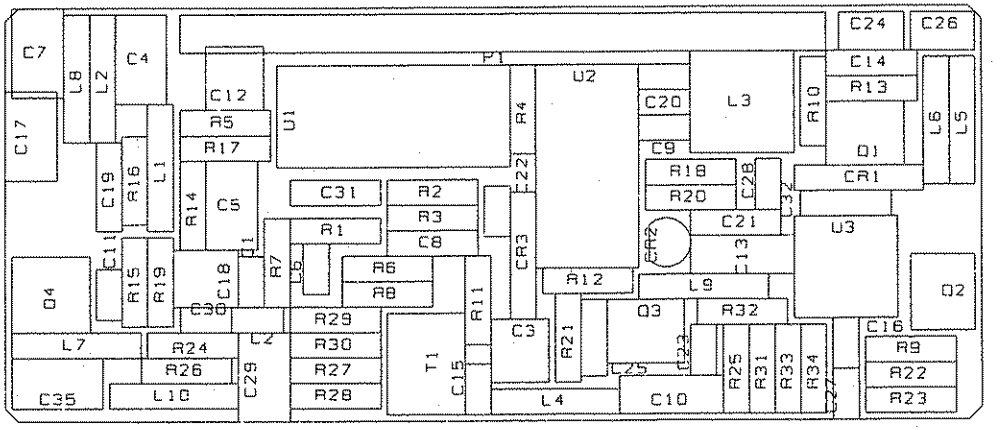

A11088

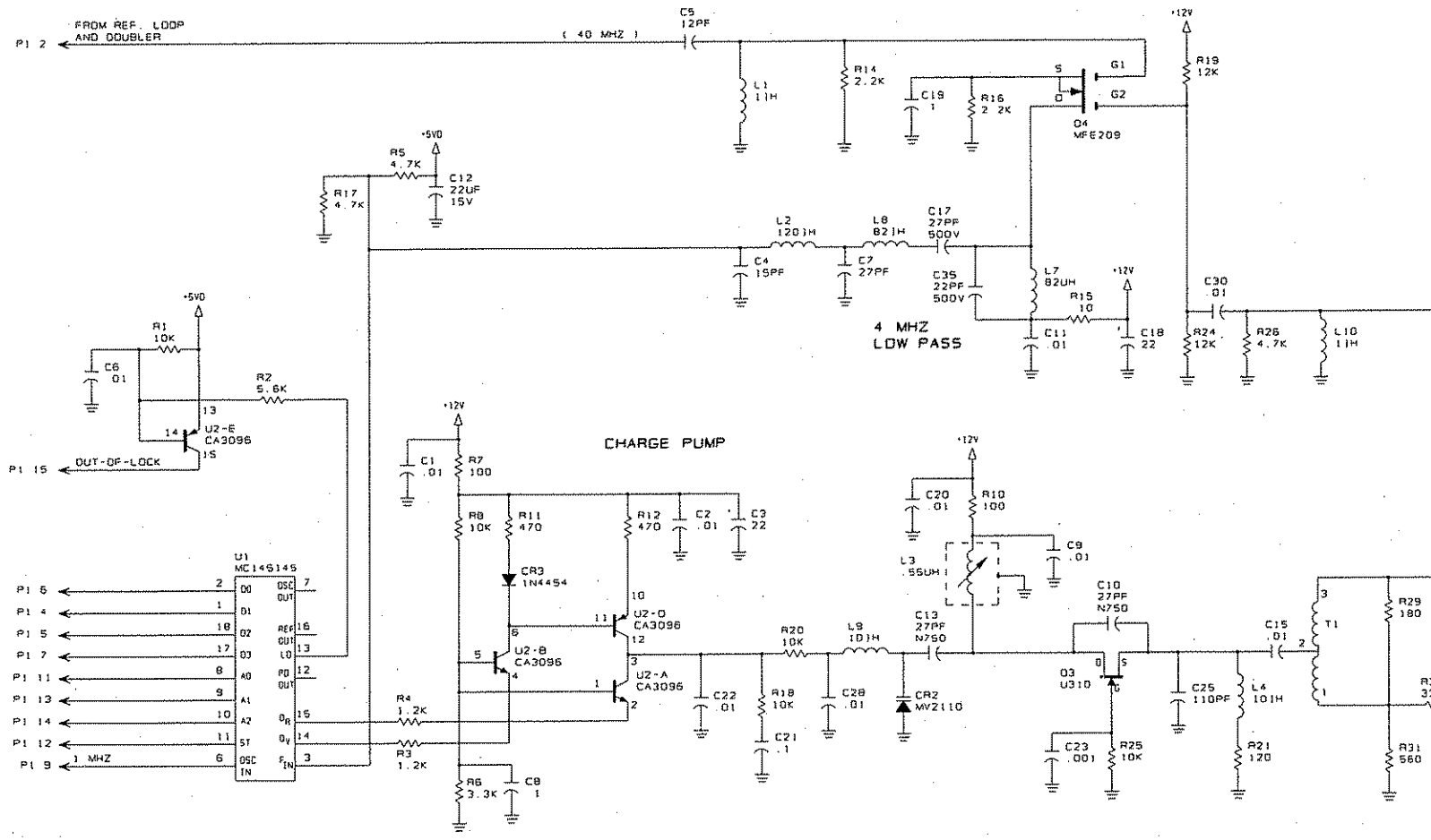
FROM REF. LOOP AND DOUBLER
P1 2
(40 MHZ)
C5 12PF
L1 1.1H
R14 2.2K
C19 1
R16 2.2K
Q4 MFE209
G1
G2
S
D
+12V
R19 12K
+5VD
R5 4.7K
C12 22UF 15V
R17 4.7K
L2 120.1H
L8 82.1H
C17 27PF 500V
C4 15PF
C7 27PF
C35 22PF 500V
L7 82UH
R15 10
C11 .01
C18 22
4 MHZ LOW PASS
C30 .01
R24 12K
R26 4.7K
L10 1.1H
R1 10K
C6 .01
R2 5.6K
U2-E CA3096
P1 15
OUT-OF-LOCK
CHARGE PUMP
C1 .01
R7 100
R8 10K
R11 470
R12 470
C2 .01
C3 22
CR3 1N4454
U2-D CA3096
U2-B CA3096
U2-A CA3096
U1 MC145145
P1 6
P1 4
P1 5
P1 7
P1 11
P1 13
P1 14
P1 12
P1 9
1 MHZ
D0
D1
D2
D3
A0
A1
A2
ST
OSC IN
OSC OUT
REF OUT
LD
PD OUT
D_R
D_V
F_{IN}
R4 1.2K
R3 1.2K
R6 3.3K
C8 1
C20 .01
R10 100
C9 .01
L3 .55UH
C10 27PF N750
C13 27PF N750
R20 10K
L9 10.1H
C22 .01
R18 10K
C28 .01
C21 .1
CR2 MVZ110
Q3 U310
C23 .001
R25 10K
C25 110PF
L4 10.1H
R21 120
C15 .01
T1
R29 180
R31 560

NPN, SI 2N5179	0445130008
0, 5%, 1/8W	1010802712
0, 5%, 1/8W	1010805614
K, 5%, 1/8W	1010805622
K, 5%, 1/8W	1010801821
0, 5%, 1/8W	1010805614
K, 5%, 1/8W	1010801031
0, 5%, 1/8W	1010801007
0, 5%, 1/8W	1010808214
K, 5%, 1/8W	1010802739
K, 5%, 1/8W	1010802721
K, 5%, 1/8W	1010805622
0, 5%, 1/8W	1010803310
7, 5%, 1/8W	1010804707
K, 5%, 1/8W	1010805622
K, 5%, 1/8W	1010803328
K, 5%, 1/8W	1010801821
K, 5%, 1/8W	1010801821
0, 5%, 1/8W	1010805614
3, 5%, 1/8W	1010803301
0, 5%, 1/8W	1010805614
0, 5%, 1/8W	1010801511
0, 5%, 1/8W	1010805614
0, 5%, 1/8W	1010805614
3, 5%, 1/8W	1010803301
3, 5%, 1/8W	1010803301
0, 5%, 1/8W	1010805614
0, 5%, 1/8W	1010802712
, 5%, 1/8W	1010801805
0, 5%, 1/8W	1010802712
0, 5%, 1/8W	1010801007
K, 5%, 1/8W	1010805622
0, 5%, 1/8W	1010802712
, 5%, 1/8W	1010801805
0, 5%, 1/8W	1010805614
0, 5%, 1/8W	1010801511
5%, 1/8W	1010806807
0, 5%, 1/8W	1010802712
0, 5%, 1/8W	1010802712
5%, 1/8W	1010806807
K, 5%, 1/8W	1010801031
K, 5%, 1/8W	1010801031

1109DP

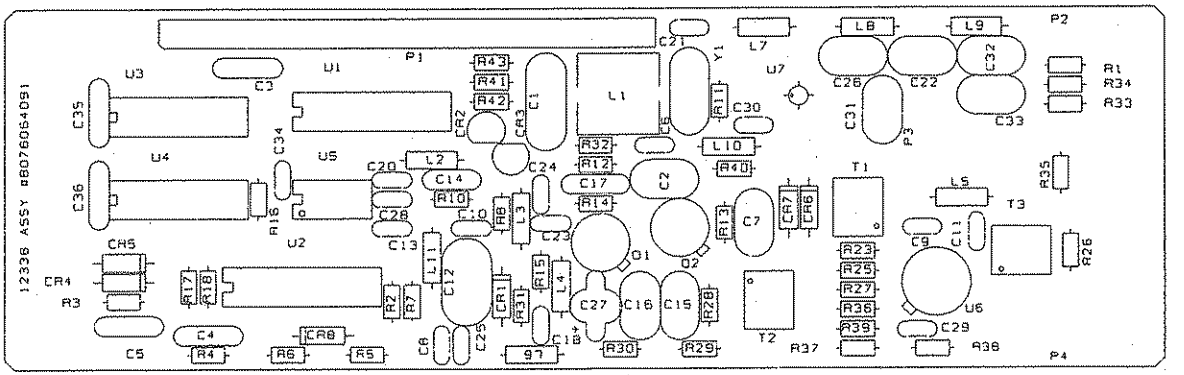

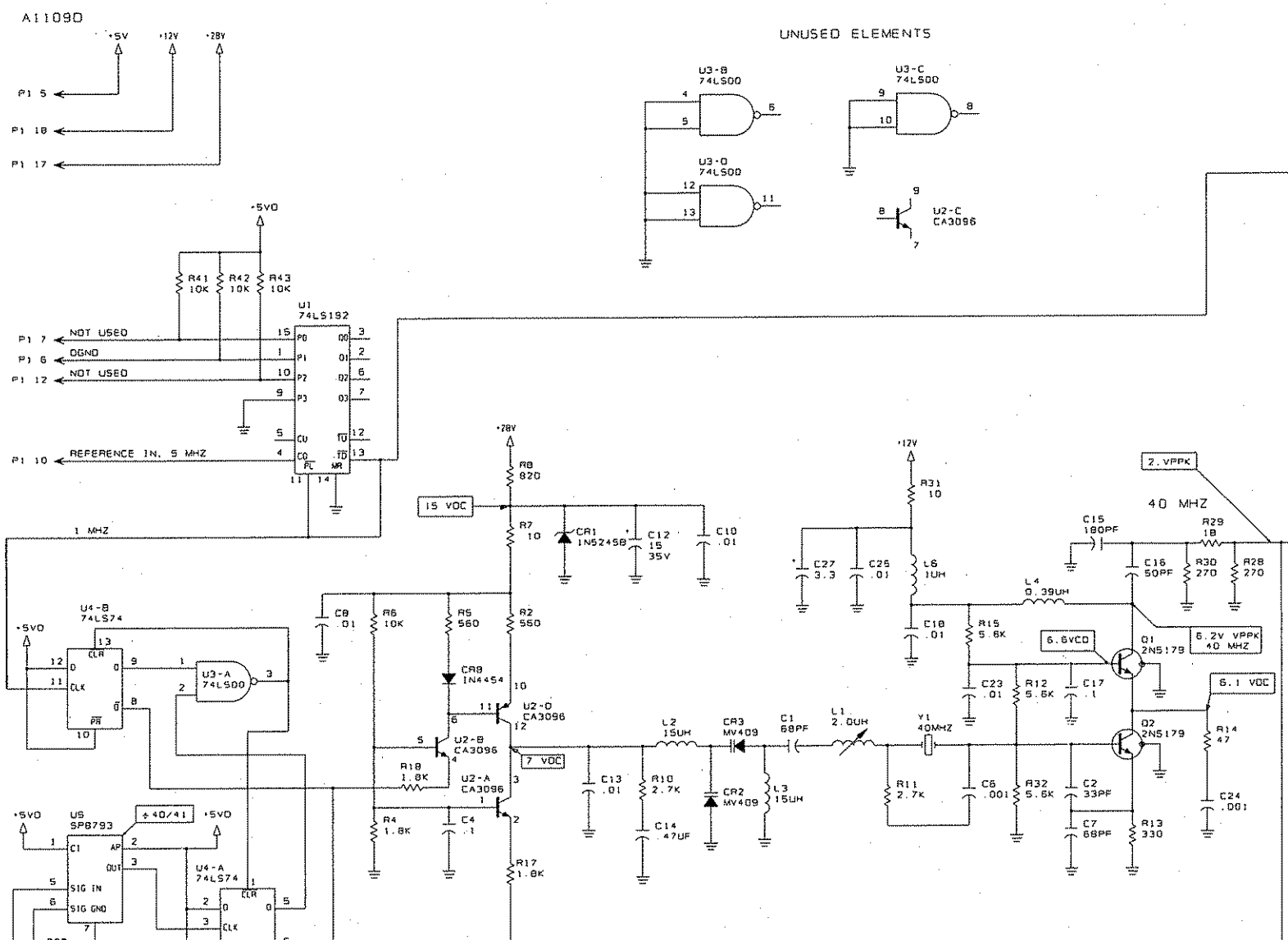
A11090
+5V
+12V
+28V
P1 5
P1 18
P1 17
UNUSED ELEMENTS
U3-B 74LS00
U3-C 74LS00
U3-D 74LS00
U2-C CA3096
+5VD
R41 10K
R42 10K
R43 10K
U1 74LS192
P1 7
NOT USED
P1 6
DGND
P1 12
NOT USED
P1 10
REFERENCE IN, 5 MHZ
1 MHZ
+28V
R8 820
15 VDC
R7 10
CR1 1N5245B
C12 15 35V
C10 .01
+12V
R31 10
C27 3.3
C25 .01
L6 1UH
C18 .01
2.VPPK
40 MHZ
C15 180PF
R29 18
C16 50PF
R30 270
R28 270
T2
L4 0.39UH
R15 5.6K
6.6VCD
Q1 2N5179
6.2V VPPK 40 MHZ
6.1 VDC
C23 .01
R12 5.6K
C17 .1
Q2 2N5179
R14 47
C24 .001
R13 330
C7 68PF
C2 33PF
R32 5.6K
C6 .001
R11 2.7K
Y1 40MHZ
L1 2.0UH
C1 68PF
CR3 MV409
CR2 MV409
L3 15UH
L2 15UH
C14 .47UF
R10 2.7K
C13 .01
7 VDC
U2-D CA3096
U2-B CA3096
U2-A CA3096
R18 1.8K
R4 1.8K
C4 .1
R17 1.8K
CR8 1N4454
R5 560
R6 10K
C8 .01
R2 560
U4-B 74LS74
U3-A 74LS00
U5 SP8793
÷40/41
U4-A 74LS74
SIG IN
SIG GND

	CAPACITOR 0.1UF, 50V, X7R	1011180014
	CAPACITOR 0.1UF, 50V, X7R	1011180014
	CAPACITOR 0.1UF, 50V, X7R	1011180014
	CAP. 1UF, 35V, 196D	0281660000
	CAP. 1UF, 35V, 196D	0281660000
	CAP. 1UF, 35V, 196D	0281660000
	CAP. 6.8UF, 20V, T368	0296780006
	CAP. .47UF, 50V, X7R 20%	0283377771
	CAP. 6.8UF, 20V, T368	0296780006
	CAP. 6.8UF, 20V, T368	0296780006
	CAP. 22UF, 15V, T368	0296660001
	CAP. 22UF, 15V, T368	0296660001
	CAP. 22UF, 15V, T368	0296660001
	CAP. 6.8UF, 20V, T368	0296780006
	CAP. .01UF, 50V, X7R 20%	0281730008
	CAP. .01UF, 50V, X7R 20%	0281730008
	CAP. .01UF, 50V, X7R 20%	0281730008
	CAP. .01UF, 50V, X7R 20%	0281730008
	CAP. 1UF, 35V, 196D	0281660000
	CAP. 1UF, 35V, 196D	0281660000
	CAPACITOR 0.1UF, 50V, X7R	1011180014
	CAP. .01UF, 50V, X7R 20%	0281730008
	CAPACITOR 0.1UF, 50V, X7R	1011180014
	CAPACITOR 0.1UF, 50V, X7R	1011180014
	CAPACITOR 0.1UF, 50V, X7R	1011180014
	CAPACITOR 0.1UF, 50V, X7R	1011180014
	CAPACITOR 0.1UF, 50V, X7R	1011180014
	CAPACITOR 0.1UF, 50V, X7R	1011180014
	CAPACITOR 0.1UF, 50V, X7R	1011180014
	CAPACITOR 0.1UF, 50V, X7R	1011180014
	CAP. .01UF, 50V, X7R 20%	0281730008
	CAPACITOR 0.1UF, 50V, X7R	1011180014
	CAPACITOR 0.1UF, 50V, X7R	1011180014
	CAP. .01UF, 50V, X7R 20%	0281730008
	CAPACITOR 0.1UF, 50V, X7R	1011180014
	CAPACITOR 0.1UF, 50V, X7R	1011180014
	CAPACITOR 0.1UF, 50V, X7R	1011180014
	CAP. .01UF, 50V, X7R 20%	0281730008
	CAP. .01UF, 50V, X7R 20%	0281730008
	CAPACITOR 0.1UF, 50V, X7R	1011180014
	CAPACITOR 0.1UF, 50V, X7R	1011180014
	CAP. .01UF, 50V, X7R 20%	0281730008

CR6	DIODE, RECTIFIER 1N4004	0405180004
CR7	DIODE, SIGNAL, SIL. 1N4454	0405270003
CR8	DIODE, SIGNAL, SIL. 1N4454	0405270003
CR9	DIODE, SIGNAL, SIL. 1N4454	0405270003
CR10	DIODE, RECTIFIER 1N4004	0405180004
CR11	DIODE, RECTIFIER 1N4004	0405180004
CR12	DIODE, RECTIFIER 1N4004	0405180004
CR13	DIODE, RECTIFIER 1N4004	0405180004
CR14	DIODE, SIGNAL, SIL. 1N4454	0405270003
CR15	DIODE, LED, RED, PC MOUNT	1008480029
CR16	DIODE, RECTIFIER 1N4004	0405180004
CR17	DIODE, SIGNAL, SIL. 1N4454	0405270003
CR18	DIODE, SIGNAL, SIL. 1N4454	0405270003
CR19	DIODE, ZENER 1N5233	0405580002
CR20	DIODE, ZENER 1N5233	0405580002
J1	SOCKET, BOARDMOUNT, 12 PIN	1011010127
K1	RELAY, DPDT, 12VDC	1005090009
K2	RELAY, DPDT, 12VDC	1005090009
Q1	TRANSISTOR, NPN, SI. 2N4124	0448010003
Q2	TRANSISTOR, P-CH, FET J175	1010840002
Q3	TRANSISTOR, N-CH, FET MTP10N06	1010750011
R1	RESISTOR 100, 5%, 1/8W	1010801015
R2	POT. 500, 10% 3/4W, 15 TURNS	0338490078
R3	RESISTOR 10K, 5%, 1/8W	1010801031
R4	RESISTOR 10K, 5%, 1/8W	1010801031
R5	RESISTOR 10K, 5%, 1/8W	1010801031
R6	RESISTOR 10K, 5%, 1/8W	1010801031
R7	RESISTOR 10K, 5%, 1/8W	1010801031
R8	RESISTOR 10K, 5%, 1/8W	1010801031
R9	RESISTOR 10K, 5%, 1/8W	1010801031
R10	RESISTOR 10K, 5%, 1/8W	1010801031
R11	POT. 1K, 10% 3/4W, 15 TURNS	0338490019
R12	RESISTOR 10K, 5%, 1/8W	1010801031
R13	RESISTOR 10K, 5%, 1/8W	1010801031
R14	RESISTOR 10K, 5%, 1/8W	1010801031
R15	RESISTOR 1M, 10%, 1/4W	0170650006
R16	RESISTOR 10K, 5%, 1/8W	1010801031
R17	RESISTOR 10K, 5%, 1/8W	1010801031
R18	RESISTOR 6.8K, 5%, 1/8W	1010806823
R19	RESISTOR 3.3K, 5%, 1/8W	1010803328
R20	RESISTOR 4.7K, 5%, 1/8W	1010804723
R21	RESISTOR 4.7K, 5%, 1/8W	1010804723

R40	RESISTOR 10K, 5%, 1/8W	1010801031
R41	POT. 10K, 10% 3/4W, 15 TURNS	0338490043
R42	RESISTOR 100K, 5%, 1/8W	1010801040
R43	RESISTOR 15K, 5%, 1/8W	1010801538
R44	RESISTOR 1K, 5%, 1/8W	1010801023
R45	RESISTOR 1K, 5%, 1/8W	1010801023
R46	RESISTOR 10K, 5%, 1/8W	1010801031
R47	RESISTOR 270K, 5%, 1/8W	1010802747
R48	RESISTOR 10K, 5%, 1/8W	1010801031
R49	RESISTOR 10K, 5%, 1/8W	1010801031
R50	RESISTOR 470K, 5%, 1/8W	1010804740
R51	RESISTOR 470K, 5%, 1/8W	1010804740
R52	RESISTOR 1K, 5%, 1/8W	1010801023
R54	RESISTOR 10K, 5%, 1/8W	1010801031
R55	RESISTOR 10K, 5%, 1/8W	1010801031
R56	RESISTOR 10K, 5%, 1/8W	1010801031
R57	POT. 10K, 10% 3/4W, 15 TURNS	0338490043
R58	RESISTOR 2.2K, 5%, 1/8W	1010802224
R59	RESISTOR 10K, 5%, 1/8W	1010801031
R60	RESISTOR 28.7K 1%, 1/8W	1004090005
R61	RESISTOR 10K, 5%, 1/8W	1010801031
R62	RESISTOR 10K, 5%, 1/8W	1010801031
R63	RESISTOR 10K, 5%, 1/8W	1010801031
R64	RESISTOR 28.7K 1%, 1/8W	1004090005
R65	RESISTOR, 4.99K, 1%, 1/8W	1005510032
R66	RESISTOR 390, 5%, 1/8W	1010803913
R67	RESISTOR 12.1K, 1%, 1/8W	1008900010
R68	RESISTOR, 56.2K, 1%, 1/8W	1008910015
R69	RESISTOR 1K AT 25C	0196110009
R70	RESISTOR 100, 5%, 1/8W	1010801015
R71	POT. 500, 10% 3/4W, 15 TURNS	0338490078
R72	RESISTOR 10K, 5%, 1/8W	1010801031
R73	RESISTOR 10K, 5%, 1/8W	1010801031
R74	RESISTOR 10K, 5%, 1/8W	1010801031
R75	RESISTOR 10K, 5%, 1/8W	1010801031
R76	RESISTOR 4.7K, 5%, 1/8W	1010804723
R77	RESISTOR 10K, 5%, 1/8W	1010801031
R78	RESISTOR 68K, 5%, 1/8W	1010806831
R79	RESISTOR 10K, 5%, 1/8W	1010801031
R80	RESISTOR 10K, 5%, 1/8W	1010801031
R81	RESISTOR 10K, 5%, 1/8W	1010801031
R82	RESISTOR 10K, 5%, 1/8W	1010801031

R101	RESISTOR 10K, 5%, 1/8W	1010801031
R102	RESISTOR 10K, 5%, 1/8W	1010801031
R103	RESISTOR 1.8K, 5%, 1/8W	1010801821
R104	RESISTOR 4.7K, 5%, 1/8W	1010804723
R105	RESISTOR 10K, 5%, 1/8W	1010801031
R106	RESISTOR 100K, 5%, 1/8W	1010801040
R107	RESISTOR 100K, 5%, 1/8W	1010801040
R108	RESISTOR 100K, 5%, 1/8W	1010801040
R109	RESISTOR 100K, 5%, 1/8W	1010801040
R110	RESISTOR 10K, 5%, 1/8W	1010801031
R111	RESISTOR 100K, 5%, 1/8W	1010801040
R112	RESISTOR 100K, 5%, 1/8W	1010801040
R113	RESISTOR 10K, 5%, 1/8W	1010801031
R114	RESISTOR 100K, 5%, 1/8W	1010801040
R115	RESISTOR 100K, 5%, 1/8W	1010801040
R116	RESISTOR 10K, 5%, 1/8W	1010801031
R117	RESISTOR 10K, 5%, 1/8W	1010801031
R118	RESISTOR 10K, 5%, 1/8W	1010801031
R119	RESISTOR 56K, 5%, 1/8W	1010805631
R120	RESISTOR 39K, 5%, 1/8W	1010803930
R121	RESISTOR 10K, 5%, 1/8W	1010801031
R122	RESISTOR 4.7K, 5%, 1/8W	1010804723
R123	RESISTOR 18K, 5%, 1/8W	1010801830
R124	RESISTOR 1K, 5%, 1/8W	1010801023
R125	RESISTOR 4.7K, 5%, 1/8W	1010804723
R126	RESISTOR 1K, 5%, 1/8W	1010801023
R127	RESISTOR 1K, 5%, 1/8W	1010801023
R128	POT. 1K, 10% 3/4W, 15 TURNS	0338490019
R129	RESISTOR 1K, 10%, 1/4W	0171560001
R130	RESISTOR 100K, 5%, 1/8W	1010801040
R131	RESISTOR 10K, 5%, 1/8W	1010801031
R132	RESISTOR 10K, 5%, 1/8W	1010801031
R133	RESISTOR 10K, 5%, 1/8W	1010801031
R134	RESISTOR 10K, 5%, 1/8W	1010801031
R135	RESISTOR 4.7K, 5%, 1/8W	1010804723
R136	RESISTOR 4.7K, 5%, 1/8W	1010804723
R137	RESISTOR 10K, 5%, 1/8W	1010801031
R138	RESISTOR 10K, 5%, 1/8W	1010801031
R139	RESISTOR 10K, 5%, 1/8W	1010801031
R140	RESISTOR 10K, 5%, 1/8W	1010801031
R142	RESISTOR 1M, 10%, 1/4W	0170650006
R143	RESISTOR 4.7K, 5%, 1/8W	1010804723

SUNAIR T-9400

BS 2 & 3 OFF

SETTINGS FOR S2-1
OUGH 3 SHOWN

S1-1 MIC COMPRESSOR ON OR OFF
S1-2 XMIT SQUELCH ON OR OFF
S1-3 LINE AUDIO COMPRESSOR ON OR OFF

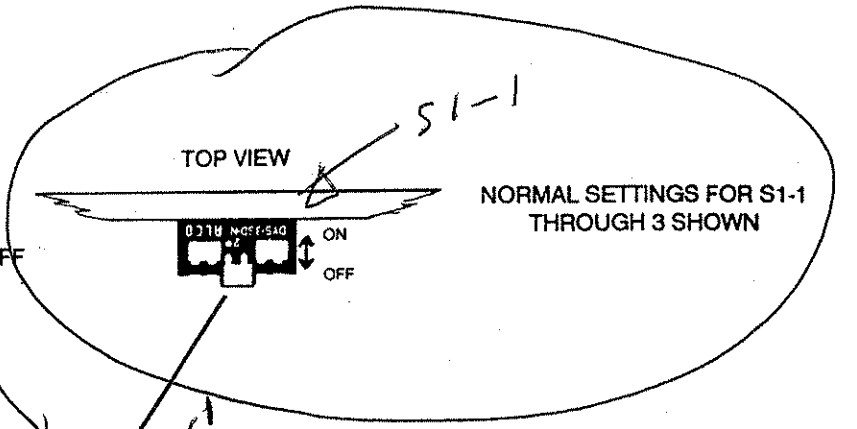

NORMAL SETTINGS FOR S1-1
THROUGH 3 SHOWN

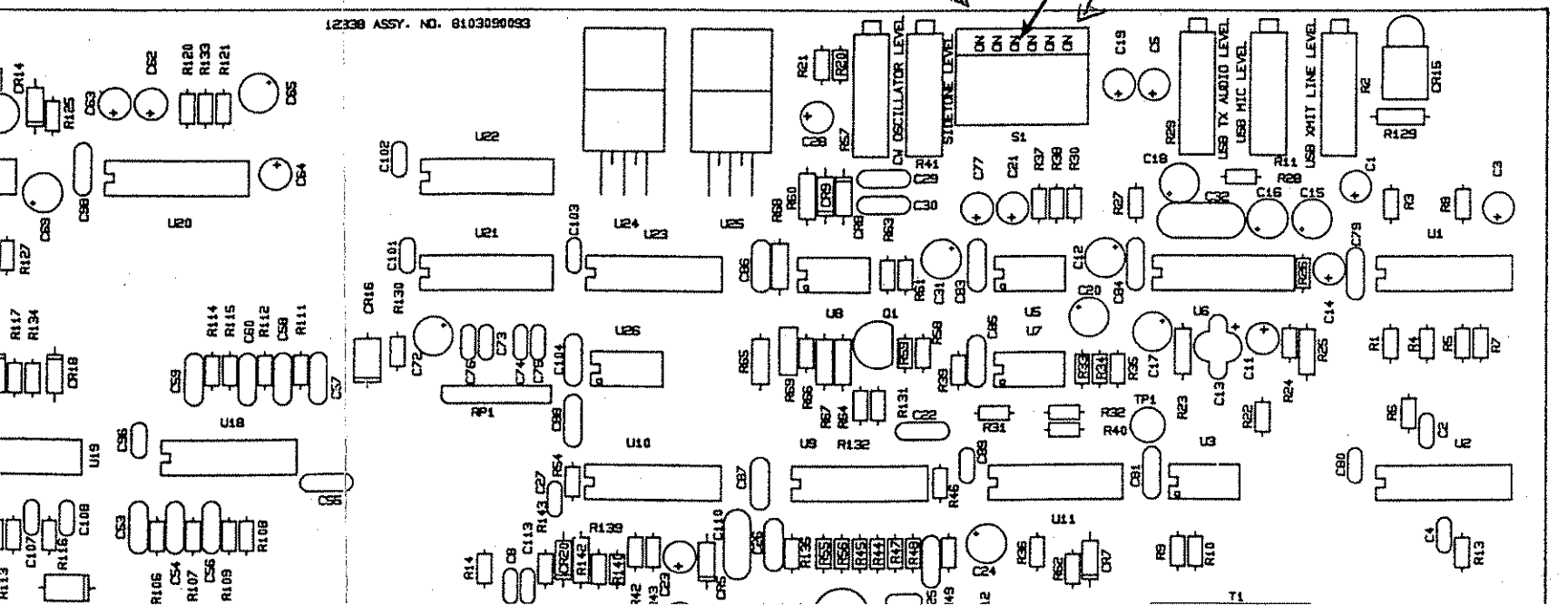

A1166D

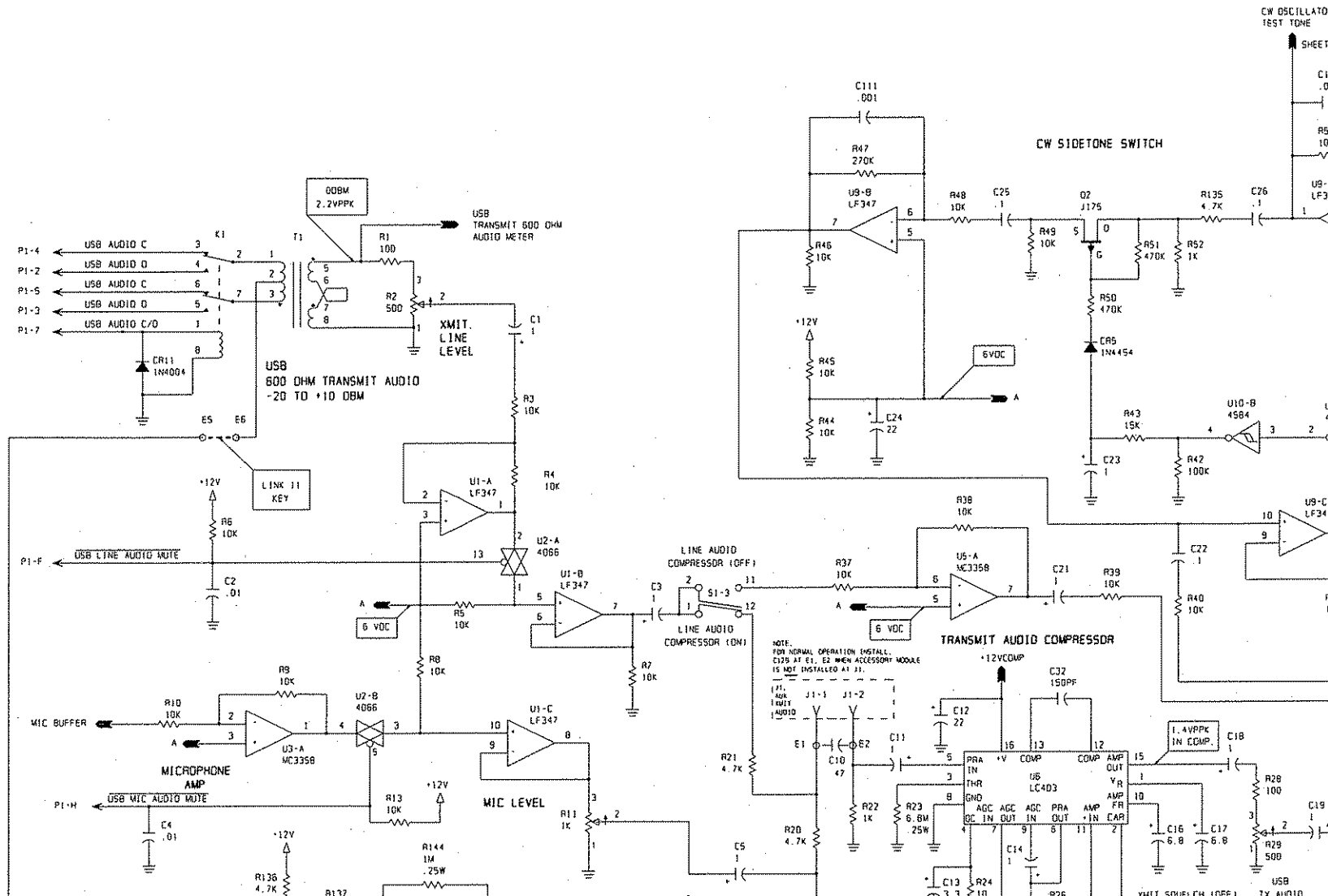
CW OSCILLATOR TEST TONE
CW SIDETONE SWITCH
USB TRANSMIT 600 OHM AUDIO METER
USB 600 OHM TRANSMIT AUDIO -20 TO +10 DBM
XMIT. LINE LEVEL
LINK J1 KEY
USB LINE AUDIO MUTE
LINE AUDIO COMPRESSOR (OFF)
LINE AUDIO COMPRESSOR (ON)
TRANSMIT AUDIO COMPRESSOR
MIC BUFFER
MICROPHONE AMP
USB MIC AUDIO MUTE
MIC LEVEL
USB AUDIO C
USB AUDIO D
USB AUDIO C/D
6 VDC
6VDC
+12V
+12VCOMP
1.4VPPK IN COMP.
U6 LC4D3
U9-B LF347
U1-A LF347
U1-B LF347
U1-C LF347
U2-A 4066
U2-B 4066
U3-A MC3358
U5-A MC3358
U10-B 4584
Q2 J175
CR5 1N4454
CR11 1N4004
K1
T1
S1-3
J1-1
J1-2
E1
E2
E5
E6
P1-4
P1-2
P1-5
P1-3
P1-7
P1-F
P1-H

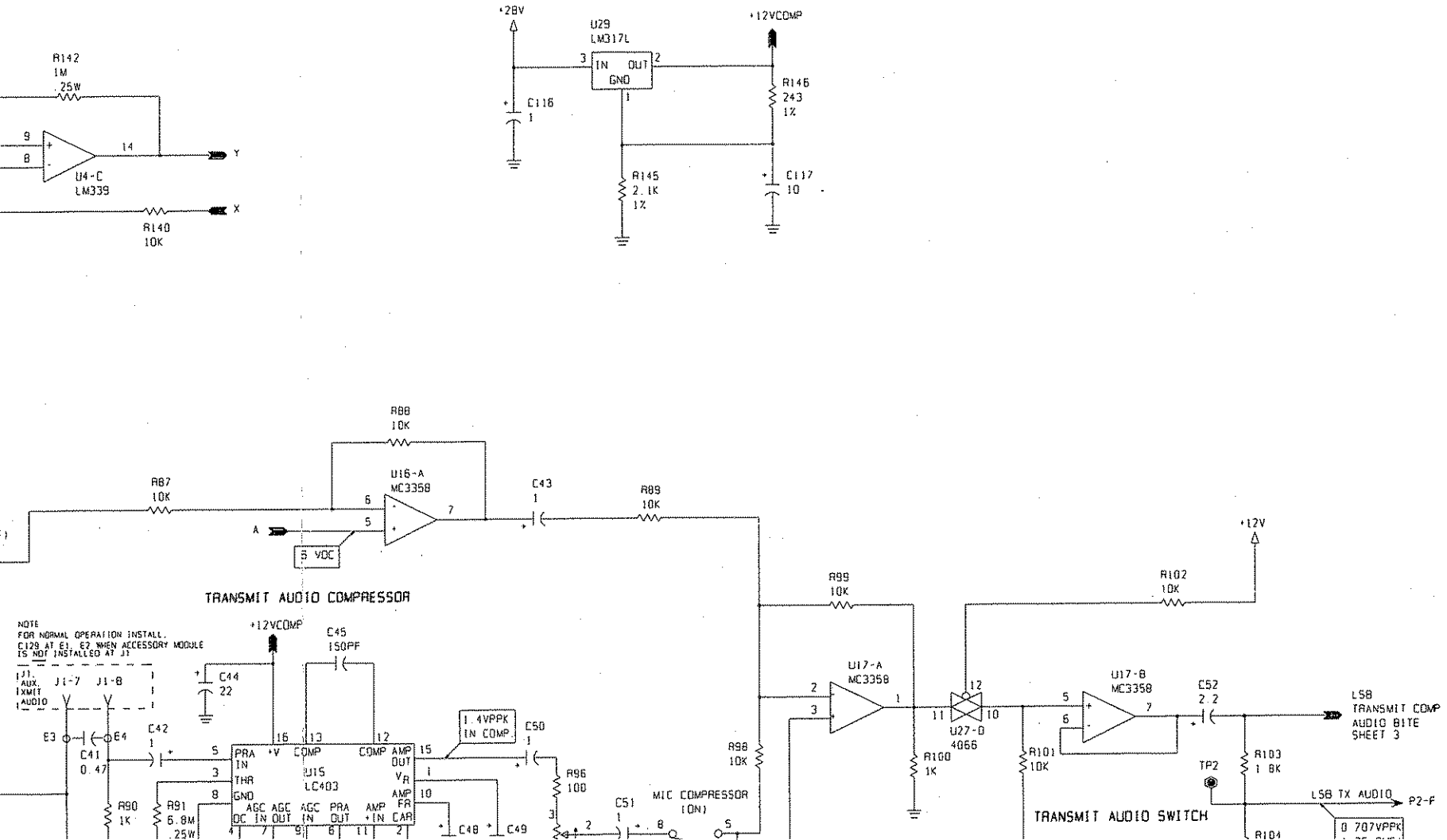
R142
1M
.25W
U4-C
LM339
R140
10K
+28V
U29
LM317L
IN
OUT
GND
C116
1
+12VCOMP
R146
243
1%
R145
2.1K
1%
C117
10
R88
10K
R87
10K
U16-A
MC3358
C43
1
R89
10K
5 VDC
TRANSMIT AUDIO COMPRESSOR
NOTE
FOR NORMAL OPERATION INSTALL.
C129 AT E1, E2 WHEN ACCESSORY MODULE
IS NOT INSTALLED AT J1
J1.
AUX.
XMIT
AUDIO
J1-7
J1-8
E3
E4
C41
0.47
C42
1
C44
22
C45
150PF
PRA IN
THR
GND
+V
COMP
COMP AMP OUT
U15
LC403
AGC DC IN
AGC OUT
AGC IN
PRA OUT
AMP +IN
AMP FB
CAR
1.4VPPK
IN COMP
C50
1
R96
100
C48
C49
R90
1K
R91
6.8M
.25W
C51
1
MIC COMPRESSOR
(ON)
R98
10K
R99
10K
U17-A
MC3358
R100
1K
U27-D
4066
R101
10K
R102
10K
+12V
U17-B
MC3358
C52
2.2
LSB
TRANSMIT COMP
AUDIO BITE
SHEET 3
TP2
R103
1.8K
LSB TX AUDIO
P2-F
TRANSMIT AUDIO SWITCH
R104
0.707VPPK

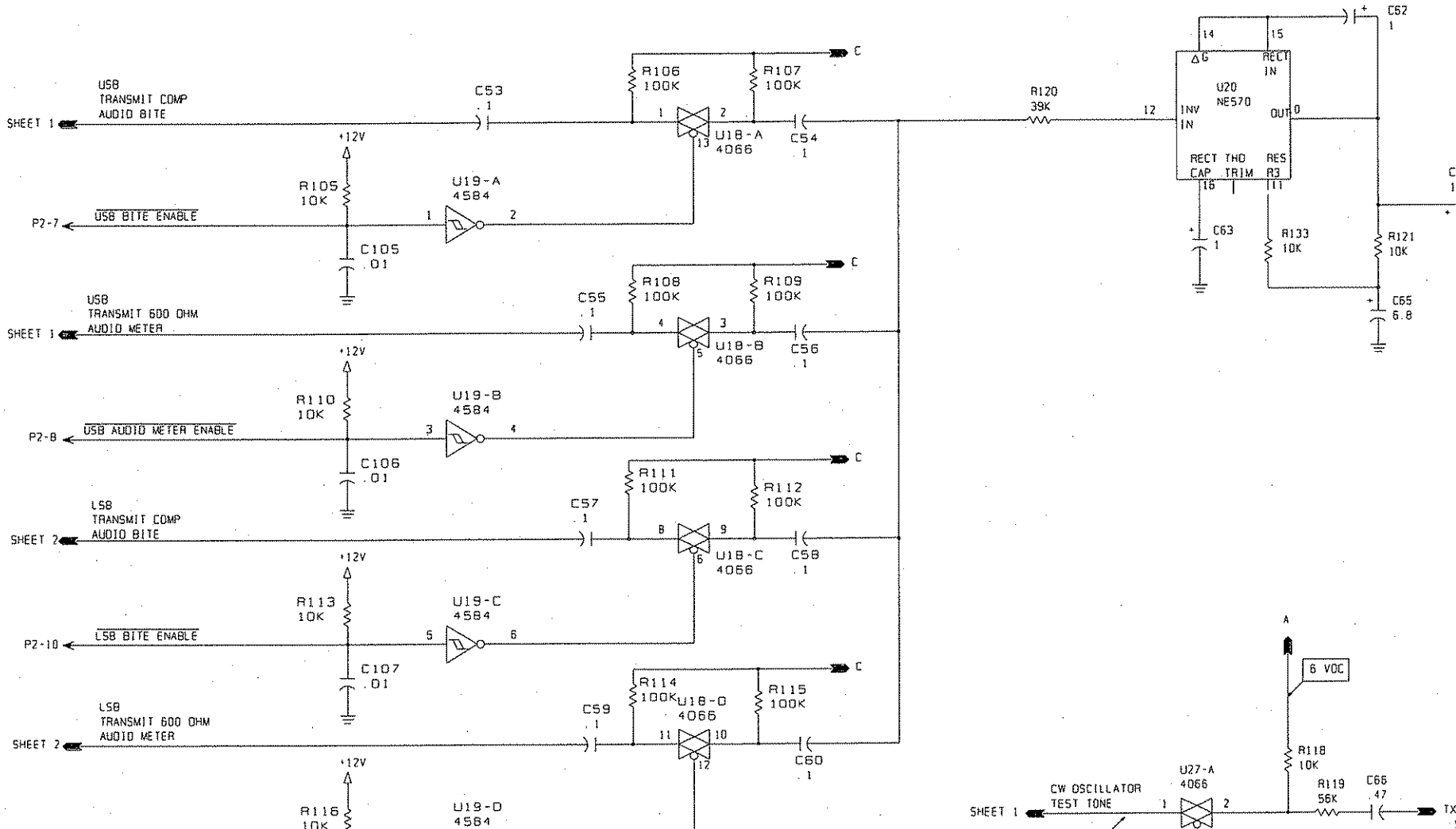
USB
TRANSMIT COMP
AUDIO BITE
SHEET 1
C53
.1
R106
100K
R107
100K
C
U18-A
4066
C54
.1
R120
39K
U20
NE570
INV
IN
RECT
IN
OUT
RECT THD
CAP TRIM
RES
R3
C62
1
C63
1
R133
10K
R121
10K
C65
6.8
+12V
R105
10K
U19-A
4584
P2-7
USB BITE ENABLE
C105
.01
USB
TRANSMIT 600 OHM
AUDIO METER
SHEET 1
C55
.1
R108
100K
R109
100K
U18-B
4066
C56
.1
R110
10K
U19-B
4584
P2-8
USB AUDIO METER ENABLE
C106
.01
LSB
TRANSMIT COMP
AUDIO BITE
SHEET 2
C57
.1
R111
100K
R112
100K
U18-C
4066
C58
.1
R113
10K
U19-C
4584
P2-10
LSB BITE ENABLE
C107
.01
LSB
TRANSMIT 600 OHM
AUDIO METER
SHEET 2
C59
.1
R114
100K
U18-D
4066
R115
100K
C60
.1
R116
10K
U19-D
4584
A
6 VDC
R118
10K
U27-A
4066
CW OSCILLATOR
TEST TONE
SHEET 1
R119
56K
C66
.47
TX

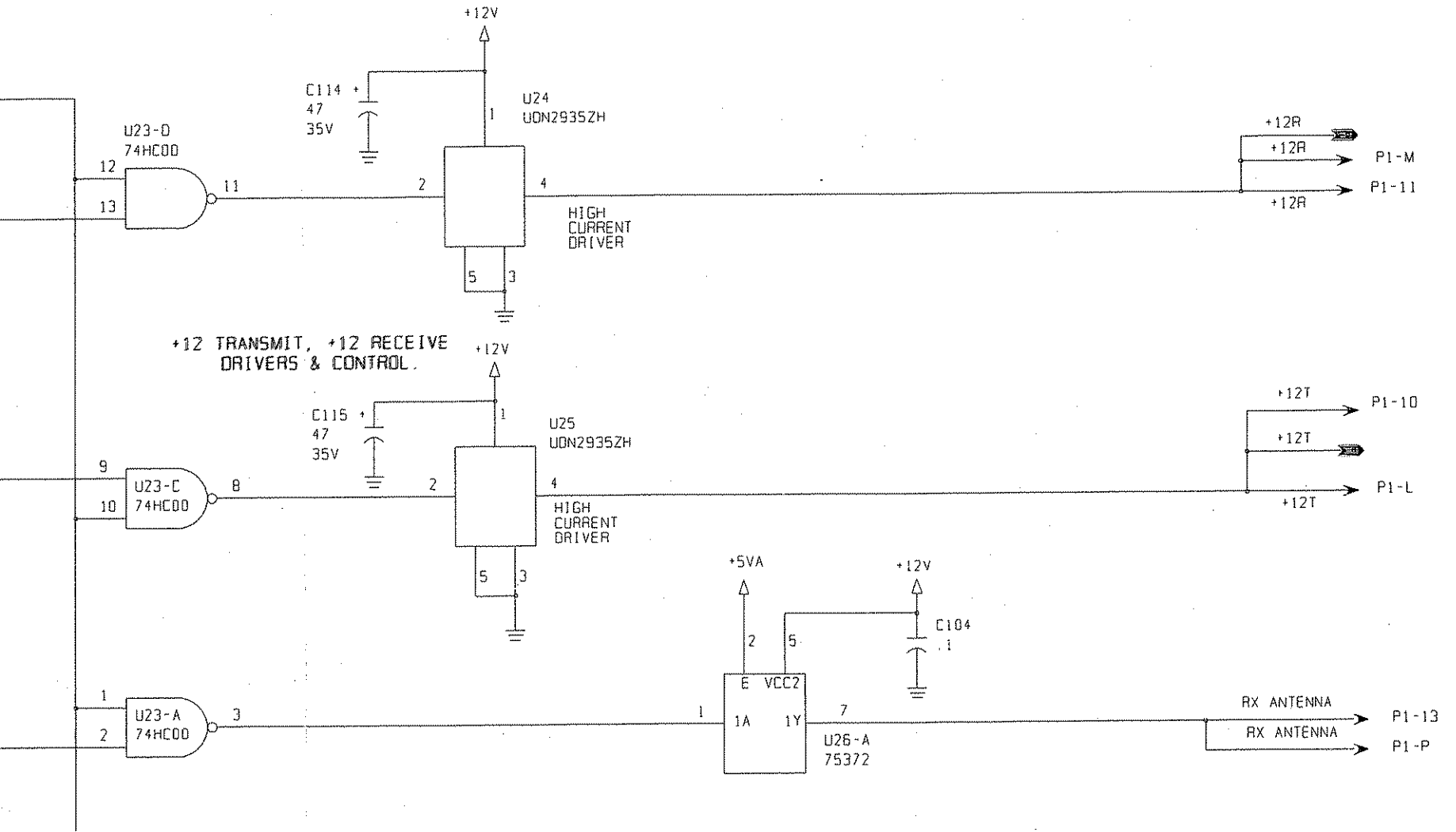
+12V
C114
47
35V
U24
UDN2935ZH
U23-D
74HC00
12
13
11
2
4
HIGH
CURRENT
DRIVER
5
3
+12R
+12R
+12R
P1-M
P1-11
+12 TRANSMIT, +12 RECEIVE
DRIVERS & CONTROL.
+12V
C115
47
35V
U25
UDN2935ZH
9
10
U23-C
74HC00
8
2
4
HIGH
CURRENT
DRIVER
5
3
+12T
+12T
+12T
P1-10
P1-L
+5VA
+12V
C104
.1
2
5
E
VCC2
1A
1Y
7
U26-A
75372
1
2
U23-A
74HC00
3
1
RX ANTENNA
RX ANTENNA
P1-13
P1-P

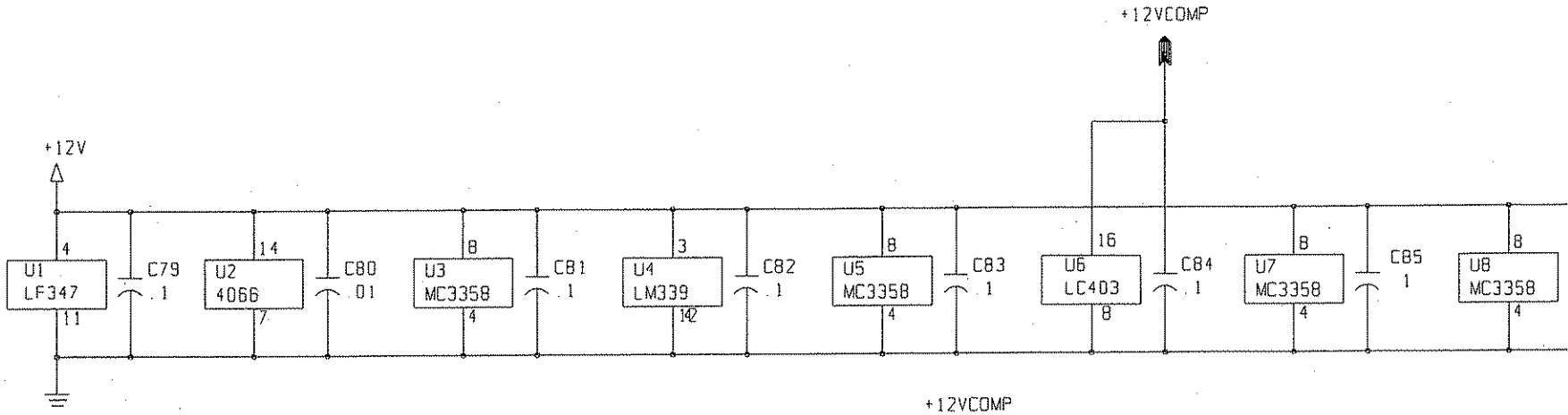
+12VCOMP
+12V
U1 LF347
C79 .1
U2 4066
C80 .01
U3 MC3358
C81 .1
U4 LM339
C82 .1
U5 MC3358
C83 .1
U6 LC403
C84 .1
U7 MC3358
C85 1
U8 MC3358

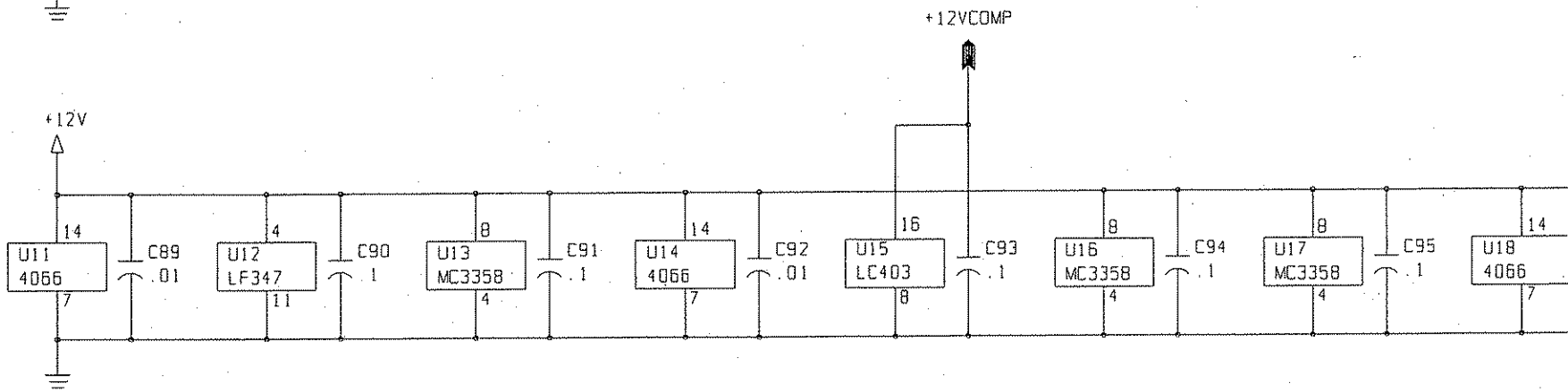
+12VCOMP
+12V
U11 4066
C89 .01
U12 LF347
C90 .1
U13 MC3358
C91 .1
U14 4066
C92 .01
U15 LC403
C93 .1
U16 MC3358
C94 .1
U17 MC3358
C95 .1
U18 4066

+5VA

	CAP. 10PF, 500V, DM10	0259830003
	CAP. .01UF, 50V, X7R 20%	0281730008
	CAP. 110PF, 500V, DM10, 5%	0257750002
	CAP. 0.001UF, 100V, X7R, 20%	0281630003
	CAP. 0.001UF, 100V, X7R, 20%	0281630003
	CAPACITOR 0.1UF, 50V, X7R	1011180014
	CAP. 6.8UF, 20V, T368	0296780006
	CAPACITOR 0.1UF, 50V, X7R	1011180014
	CAP. 6.8UF, 20V, T368	0296780006
	CAP. 0.001UF, 100V, X7R, 20%	0281630003
	CAP. .01UF, 50V, X7R 20%	0281730008
	CAPACITOR 0.1UF, 50V, X7R	1011180014
	CAP. .01UF, 50V, X7R 20%	0281730008
	CAPACITOR 0.1UF, 50V, X7R	1011180014
	CAP. .01UF, 50V, X7R 20%	0281730008
	CAP. 91PF, 500V, DM10, 5%	0284420000
	CAP. 150PF, 500V, DM10, 5%	0293430004
	CAP. 82PF, 500V, DM10, 5%	0262120003
	CAP. .01UF, 50V, X7R 20%	0281730008
	CAP. .01UF, 50V, X7R 20%	0281730008
	CAPACITOR 0.1UF, 50V, X7R	1011180014
	CAP. .01UF, 50V, X7R 20%	0281730008
	CAPACITOR 0.1UF, 50V, X7R	1011180014
	CAP. .01UF, 50V, X7R 20%	0281730008
	CAP. .01UF, 50V, X7R 20%	0281730008
	CAP. .01UF, 50V, X7R 20%	0281730008
	CAP. 0.001UF, 100V, X7R, 20%	0281630003
	CAP. 0.001UF, 100V, X7R, 20%	0281630003
	CAP. 0.001UF, 100V, X7R, 20%	0281630003
	CAP. .01UF, 50V, X7R 20%	0281730008
	CAP. 0.001UF, 100V, X7R, 20%	0281630003
	CAP. .01UF, 50V, X7R 20%	0281730008
	CAP. .01UF, 50V, X7R 20%	0281730008
	CAP. .01UF, 50V, X7R 20%	0281730008
	CAP. .01UF, 50V, X7R 20%	0281730008
	CAP. 0.001UF, 100V, X7R, 20%	0281630003
	CAP. 0.001UF, 100V, X7R, 20%	0281630003
	CAP. 0.001UF, 100V, X7R, 20%	0281630003
	CAP. .01UF, 50V, X7R 20%	0281730008
	CAP. 0.001UF, 100V, X7R, 20%	0281630003
	CAP. .01UF, 50V, X7R 20%	0281730008
	CAP. .01UF, 50V, X7R 20%	0281730008

C123	CAP. 0.001UF, 100V, X7R, 20%	0281630003
C124	CAP. 0.001UF, 100V, X7R, 20%	0281630003
C125	CAPACITOR 0.1UF, 50V, X7R	1011180014
C126	CAP. 110PF, 500V, DM10, 5%	0257750002
C127	CAP. 180PF, 500V, DM10, 5%	0294100008
C128	CAP. 110PF, 500V, DM10, 5%	0257750002
C129	CAP. .01UF, 50V, X7R 20%	0281730008
C130	CAP. 220PF, 500V, DM10, 2%	1010870009
C131	CAP. .01UF, 50V, X7R 20%	0281730008
C132	CAP. 220PF, 500V, DM10, 2%	1010870009
C133	CAP. .01UF, 50V, X7R 20%	0281730008
C134	CAP. .01UF, 50V, X7R 20%	0281730008
C135	CAPACITOR 0.1UF, 50V, X7R	1011180014
C136	CAP. 2.2UF, 35V, T368	0273950002
C137	CAPACITOR 0.1UF, 50V, X7R	1011180014
C138	CAPACITOR 0.1UF, 50V, X7R	1011180014
C139	CAPACITOR 0.1UF, 50V, X7R	1011180014
C140	CAP. .01UF, 50V, X7R 20%	0281730008
C141	CAPACITOR 0.1UF, 50V, X7R	1011180014
C142	CAPACITOR 0.1UF, 50V, X7R	1011180014
C143	CAPACITOR 0.1UF, 50V, X7R	1011180014
C144	CAPACITOR 0.1UF, 50V, X7R	1011180014
C145	CAPACITOR 0.1UF, 50V, X7R	1011180014
C146	CAPACITOR 0.1UF, 50V, X7R	1011180014
C147	CAPACITOR 0.1UF, 50V, X7R	1011180014
C148	CAPACITOR 0.1UF, 50V, X7R	1011180014
C150	CAP. 0.001UF, 100V, X7R, 20%	0281630003
C151	CAP. 0.001UF, 100V, X7R, 20%	0281630003
C152	CAP. .01UF, 50V, X7R 20%	0281730008
C153	CAPACITOR 0.1UF, 50V, X7R	1011180014
C154	CAP. .01UF, 50V, X7R 20%	0281730008
C155	CAP. .01UF, 50V, X7R 20%	0281730008
C156	CAPACITOR 0.1UF, 50V, X7R	1011180014
C157	CAPACITOR 0.1UF, 50V, X7R	1011180014
C158	CAPACITOR 0.1UF, 50V, X7R	1011180014
C159	CAP. .01UF, 50V, X7R 20%	0281730008
C160	CAP. 1UF, 35V, 196D	0281660000
C161	CAP. 1UF, 35V, 196D	0281660000
C162	CAP. 47UF, 35V	0282190007
C163	CAP. 47UF, 35V	0282190007
C164	CAP. 10UF, 20V	1007290005
C165	CAP. .47UF, 50V, X7R 20%	0283377771
[illegible]	DIODE, SIGNAL SIL, 1N4454	[illegible]

CR19	DIODE, PIN 1N5767	0405570007
CR20	DIODE, PIN 1N5767	0405570007
CR21	DIODE, PIN 1N5767	0405570007
CR22	DIODE, SIGNAL, SIL. 1N4454	0405270003
CR23	DIODE, SIGNAL, SIL. 1N4454	0405270003
CR24	DIODE, HOT CARRIER 1N6263	0405610009
CR25	DIODE, HOT CARRIER 1N6263	0405610009
CR26	DIODE, HOT CARRIER 1N6263	0405610009
CR27	DIODE, HOT CARRIER 1N6263	0405610009
CR28	DIODE, HOT CARRIER 1N6263	0405610009
CR29	DIODE, HOT CARRIER 1N6263	0405610009
CR30	DIODE, HOT CARRIER 1N6263	0405610009
CR32	DIODE, HOT CARRIER 1N6263	0405610009
CR33	DIODE, PIN 1N5767	0405570007
CR34	DIODE, PIN 1N5767	0405570007
CR35	DIODE, PIN 1N5767	0405570007
CR36	DIODE, SIGNAL, SIL. 1N4454	0405270003
CR37	DIODE, SIGNAL, SIL. 1N4454	0405270003
CR38	DIODE, PIN 1N5767	0405570007
CR39	DIODE, PIN 1N5767	0405570007
CR40	DIODE, SIGNAL, SIL. 1N4454	0405270003
CR41	DIODE, SIGNAL, SIL. 1N4454	0405270003
CR42	DIODE, SIGNAL, SIL. 1N4454	0405270003
CR43	DIODE, SIGNAL, SIL. 1N4454	0405270003
FL1	FILTER, LSB (USB OPERATION)	8076082501
FL3	FILTER, USB (LSB OPERATION)	8076083303
FL5	FILTER,CRYSTAL 48.305 MHZ	1010430017
L1	INDUCTOR, MOLDED, 1000UH, 10%	0664940005
L2	INDUCTOR, MOLDED, 1000UH, 10%	0664940005
L3	INDUCTOR, MOLDED, 1000UH, 10%	0664940005
L4	INDUCTOR, MOLDED, 1000UH, 10%	0664940005
L5	INDUCTOR, MOLDED, 47UH, 5%	0646420003
L6	INDUCTOR, MOLDED, 150UH, 5%	0659190001
L7	INDUCTOR, MOLDED, 150UH, 5%	0659190001
L8	INDUCTOR, MOLDED, 8.2UH, 5%	0652060005
L9	INDUCTOR, MOLDED, 8.2UH, 5%	0652060005
L10	INDUCTOR, MOLDED, 8.2UH, 5%	0652060005
L11	INDUCTOR, MOLDED, 8.2UH, 5%	0652060005
L12	INDUCTOR, MOLDED, 0.18UH, 5%	0648740005
L13	INDUCTOR, MOLDED, 0.18UH, 5%	0648740005
L14	INDUCTOR, MOLDED, 8.2UH, 5%	0652060005
L15	INDUCTOR, MOLDED, 0.68UH, 5%	0649030001

Q11	TRANSISTOR, PNP, SI. 2N2907A	0448390001
Q12	TRANSISTOR, NPN, SI. 2N4124	0448010003
Q13	TRANSISTOR, NPN, SI. 2N4124	0448010003
Q14	TRANSISTOR, N-CH. FET 2N5457	1010120026
Q15	TRANSISTOR, NPN, SI. 2N4124	0448010003
Q16	TRANSISTOR, N-CH, FET 2N7000	1011050013
Q17	TRANSISTOR, N-CH, FET 2N7000	1011050013
Q18	TRANSISTOR, NPN, SI. 2N2222A	0448580004
Q19	TRANSISTOR, NPN, SI MJE200	1011450038
Q20	TRANSISTOR, N-CH, FET 2N7000	1011050013
Q21	TRANSISTOR, N-CH, FET 2N7000	1011050013
Q22	TRANSISTOR, N-CH, FET 2N7000	1011050013
Q23	TRANSISTOR, N-CH, FET 2N7000	1011050013
R1	RESISTOR 10K, 5%, 1/8W	1010801031
R2	RESISTOR 10K, 5%, 1/8W	1010801031
R3	POT. 10K, 10% 1/2W, 25 TURNS	1004880014
R4	RESISTOR 1K, 5%, 1/8W	1010801023
R5	RESISTOR 1K, 5%, 1/8W	1010801023
R6	RESISTOR 4.7K, 5%, 1/8W	1010804723
R9	RESISTOR 31.6K 1%, 1/8W	1004050020
R10	POT. 10K, 10% 1/2W, 25 TURNS	1004880014
R11	RESISTOR 31.6K 1%, 1/8W	1004050020
R12	RESISTOR 1K, 5%, 1/8W	1010801023
R13	RESISTOR 100, 5%, 1/8W	1010801015
R14	RESISTOR 100, 5%, 1/8W	1010801015
R15	RESISTOR 820, 5%, 1/8W	1010808214
R16	RESISTOR 100, 5%, 1/8W	1010801015
R17	RESISTOR 1.2K, 5%, 1/8W	1010801228
R18	RESISTOR 1K, 5%, 1/8W	1010801023
R19	RESISTOR 2.7K, 5%, 1/8W	1010802721
R20	RESISTOR 2.7K, 5%, 1/8W	1010802721
R21	RESISTOR 10K, 5%, 1/8W	1010801031
R22	RESISTOR 68K, 5%, 1/8W	1010806831
R26	RESISTOR 68, 5%, 1/8W	1010806807
R27	RESISTOR 150, 5%, 1/8W	1010801511
R28	RESISTOR 68, 5%, 1/8W	1010806807
R29	RESISTOR 10K, 5%, 1/8W	1010801031
R30	RESISTOR 22K, 5%, 1/8W	1010802232
R31	RESISTOR 10K, 5%, 1/8W	1010801031
R32	RESISTOR 1K, 5%, 1/8W	1010801023
R33	RESISTOR 2.7K, 5%, 1/8W	1010802721
R34	RESISTOR 4.7K, 5%, 1/8W	1010804723

ESISTOR 1.5K, 5%, 1/8W			1010801520
ESISTOR 560K, 5%, 1/8W			1010805649
ESISTOR 5.6K, 5%, 1/8W			1010805622
ESISTOR 5.6K, 5%, 1/8W			1010805622
OT. 10K, 10% 1/2W, 25 TURNS			1004880014
ESISTOR 10K, 5%, 1/8W			1010801031
ESISTOR 100, 5%, 1/8W			1010801015
ESISTOR 100, 5%, 1/8W			1010801015
ESISTOR 47, 5%, 1/8W			1010804707
ESISTOR 47, 5%, 1/8W			1010804707
ESISTOR 47K, 5%, 1/8W			1010804731
ESISTOR 1K, 5%, 1/8W			1010801023
ESISTOR 1K, 5%, 1/8W			1010801023
HOKE, POWER			8076104700
HOKE, POWER			8076104700
HOKE, POWER			8076104700
RANSFORMER COMB/SPL		PSC-2-1	1010590022
RANSFORMER COMB/SPL		PSC-2-1	1010590022
.LINEAR	MC3358P1		1010110012
.LINEAR	MC1596L		1010050028
.LINEAR	MC3358P1		1010110012
.LINEAR	MC1596L		1010050028
. DIGITAL	4555B		1010560018
. DIGITAL	UDN-2981		1006330038
. LINEAR	LM317L		1010550012
, LINEAR	LM6321		1010710010
, LINEAR	LM6321		1010710010
LINEAR	MAR-4		1010900005
. LINEAR	MWA130		1010380036
LINEAR	MAR-4		1010900005
. LINEAR	MWA130		1010380036
LINEAR	MAR-4		1010900005
LINEAR	MAR-4		1010900005
LINEAR	MAR-4		1010900005
. LINEAR	MC34074		1011430037
. LINEAR	MC34074		1011430037
LINEAR	MAR-4		1010900005
. LINEAR	MWA130		1010380036
. LINEAR	LM311N		1005760021
. DIGITAL	X9103		1010820028
.LINEAR	MC3358P1		1010110012
. LINEAR	MC34072		1011440032

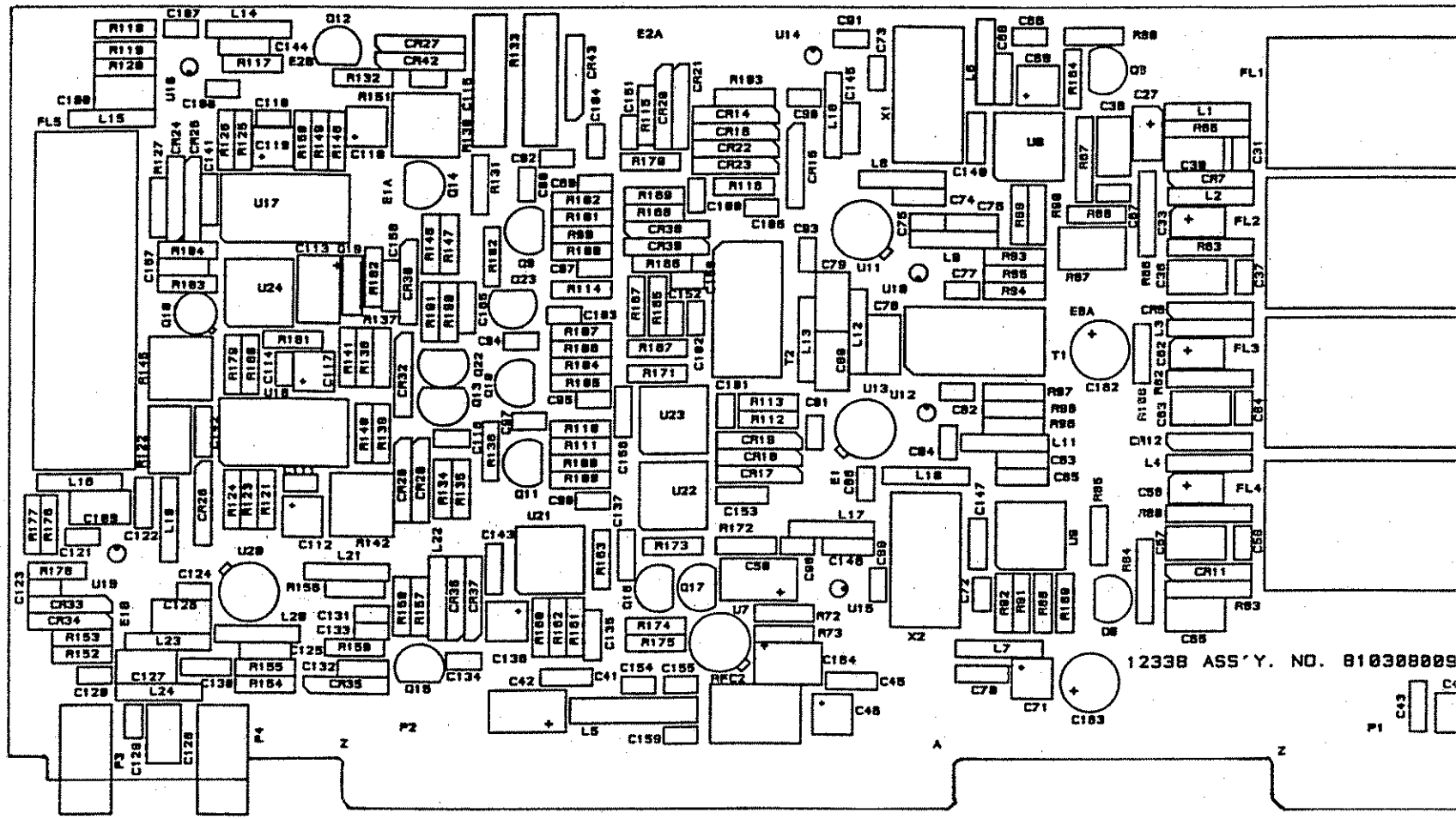
12338 ASS'Y. NO. 810308009

SUNAIR T-9400

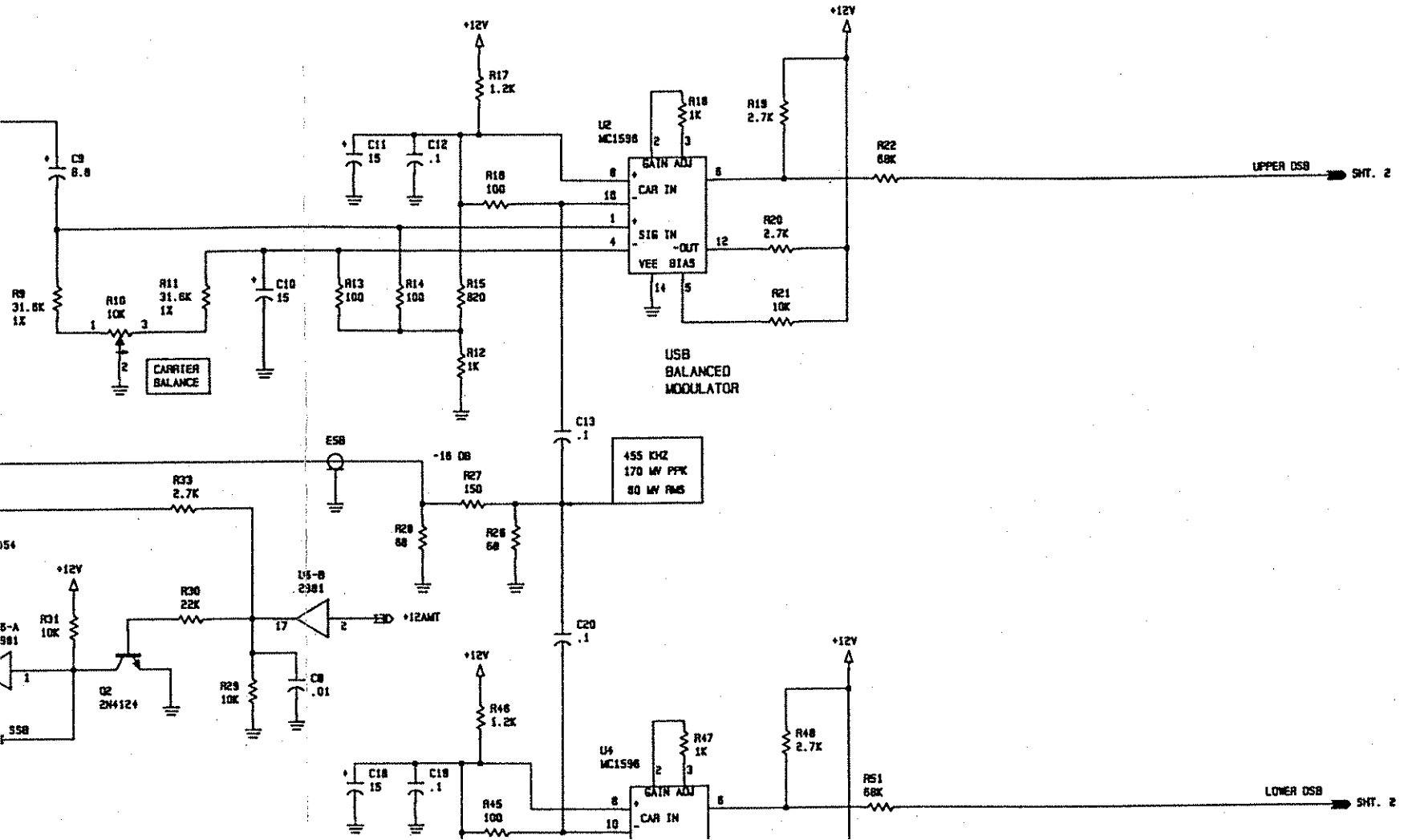

FILTER SELECT CODE		
STATUS	A	B
USB	0	0
DATA	1	0
AM	0	1
OFF	1	1

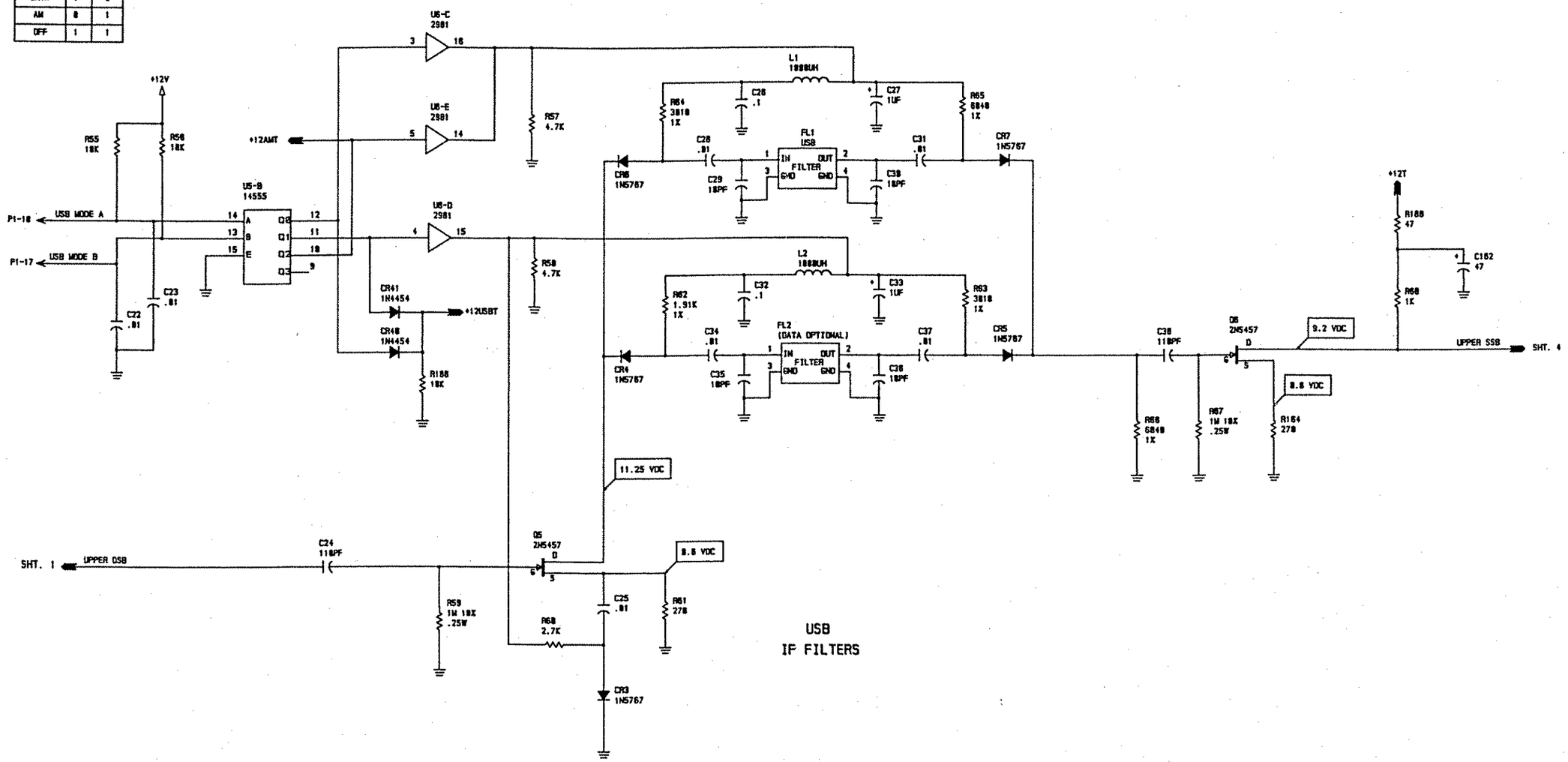

Figure 5.8.13 PC Assembly, IF 1A2A4, page 6/10.

FILTER SELECT CODE		
STATUS	A	B
LSB	0	0
DATA	1	0
OFF	1	1

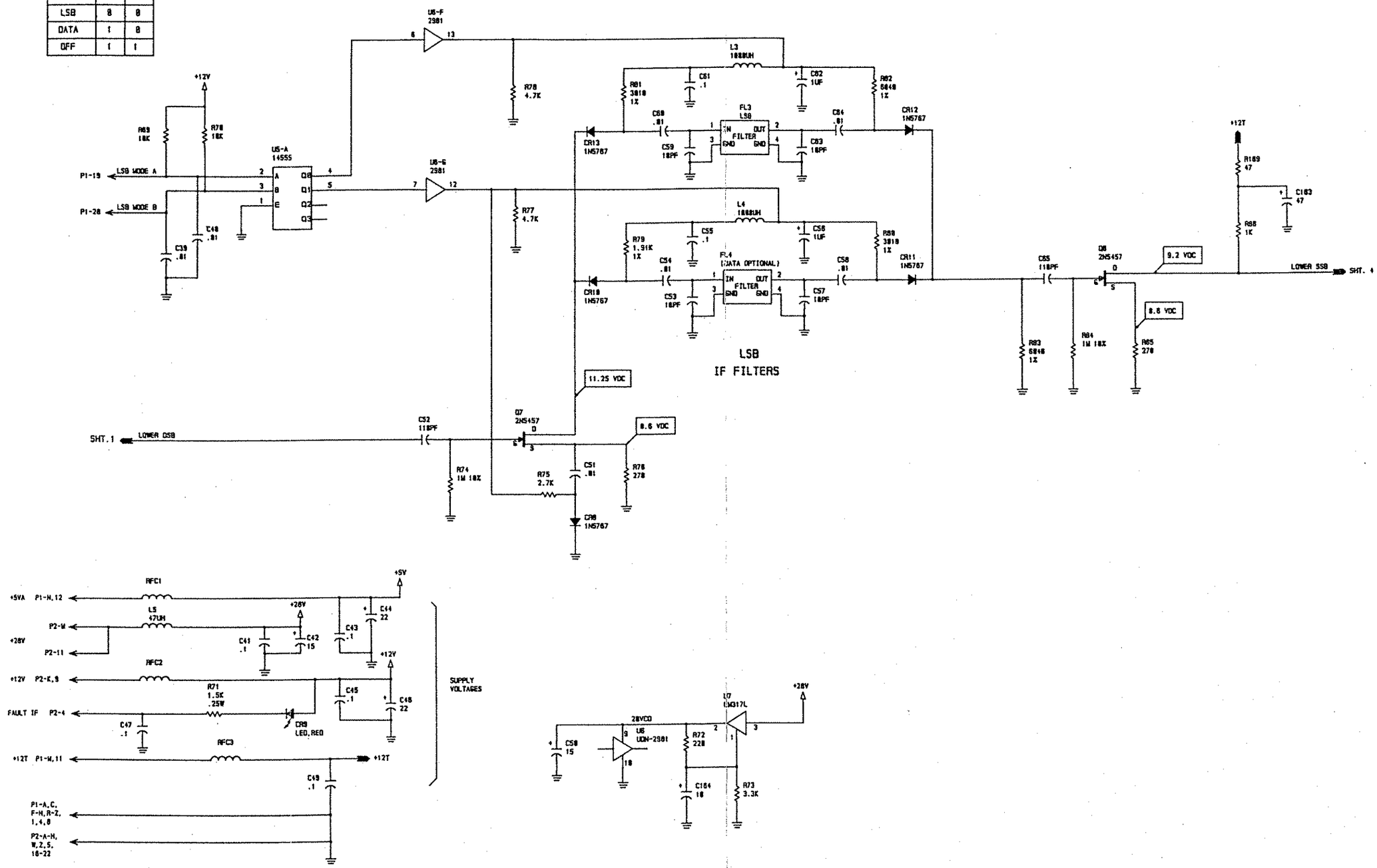

Figure 5.8.13 PC Assembly, IF 1A2A4, page 7/10.

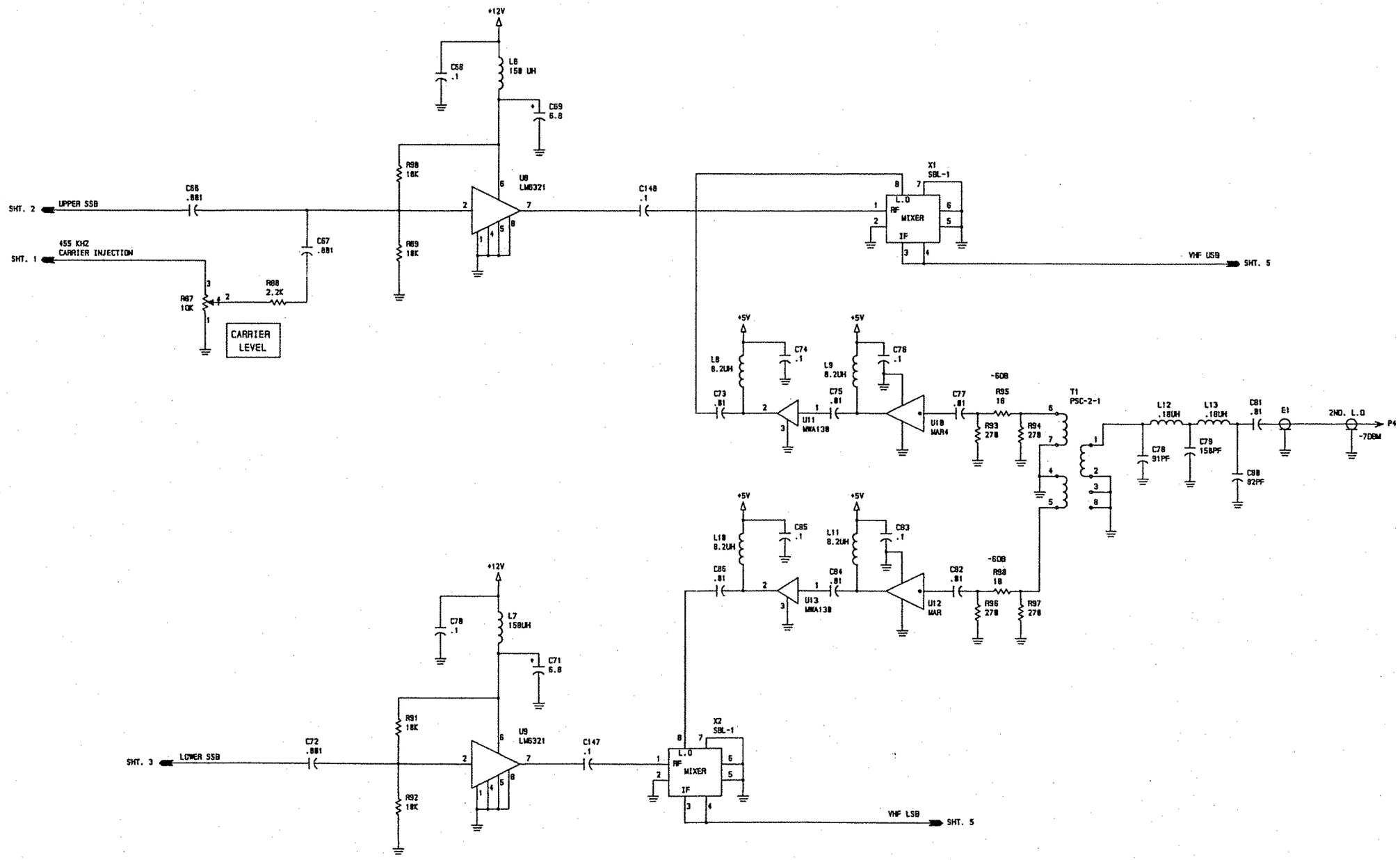

Figure 5.8.13 PC Assembly, IF 1A2A4, page 8/10.

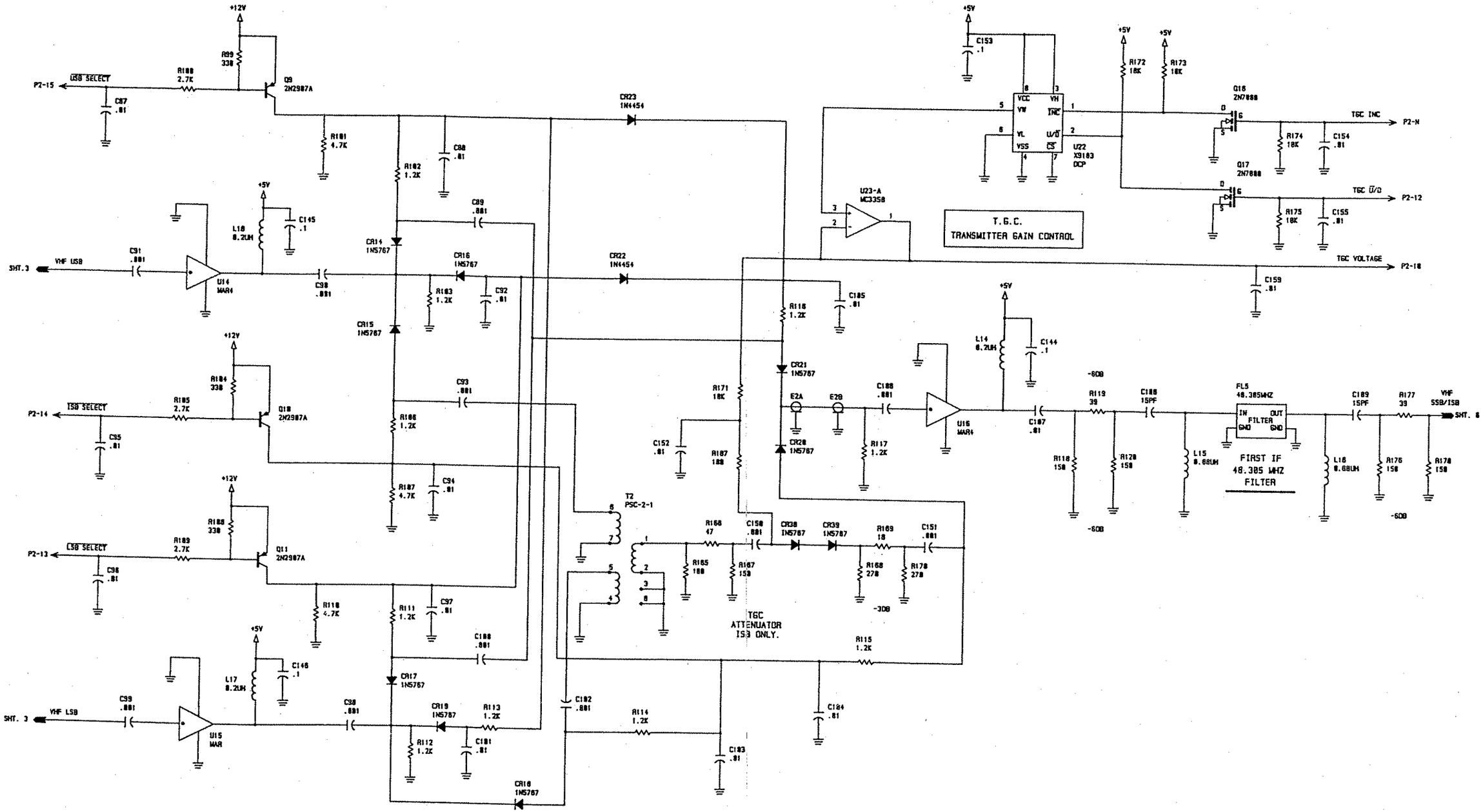

Figure 5.8.13 PC Assembly, IF 1A2A4, page 9/10.

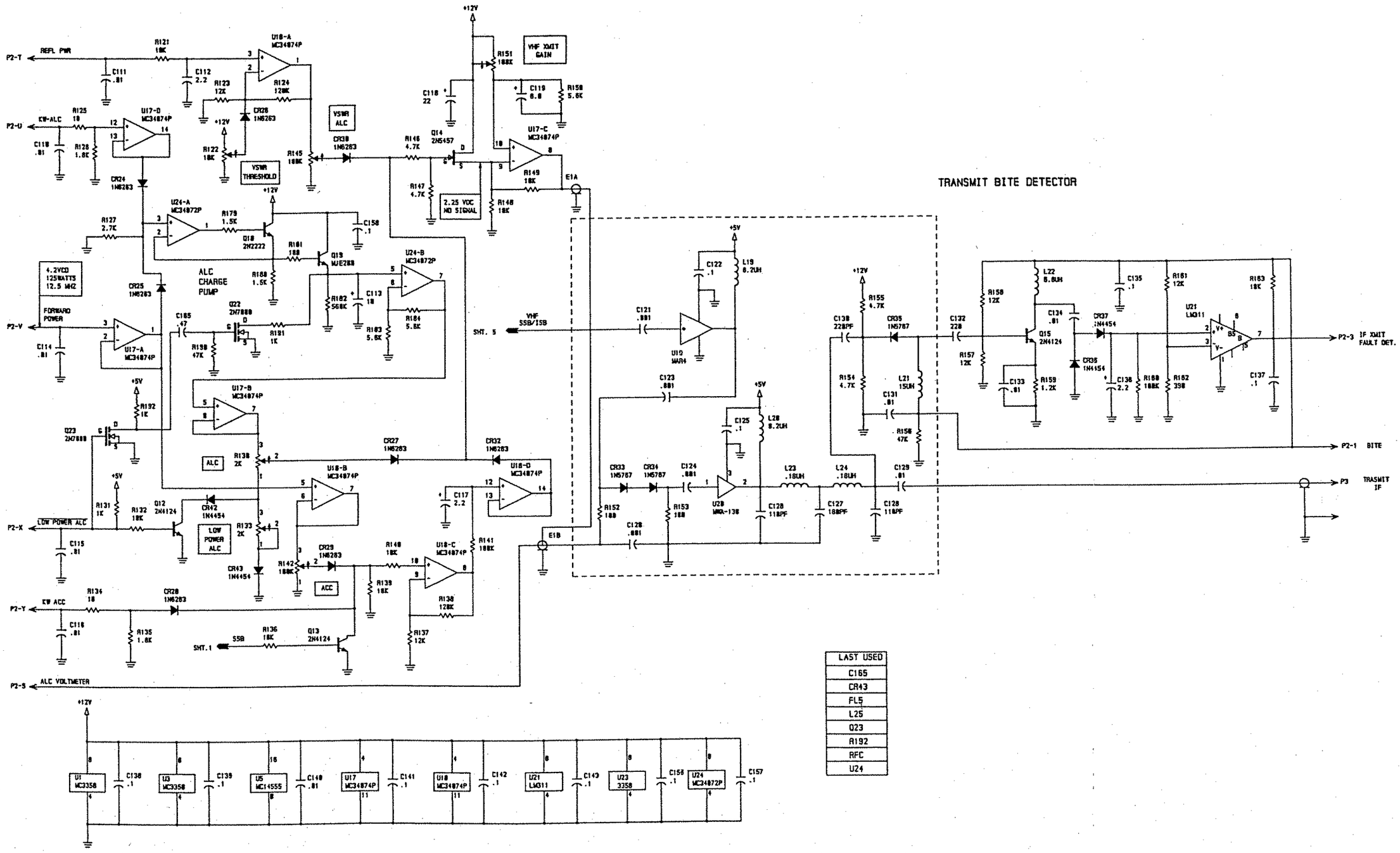

LAST USED
C165
CR43
FL5
L25
Q23
R192
RFC
U24

Figure 5.8.13 PC Assembly, IF 1A2A4, page 10/10.

PC ASSY, FRONT END 1A2A5

	PC ASSY, FRONT END 1A2A5	8076100097
C1	CAP. 0.1µF, 50V, X7R, 20%	0281610002
C2	CAP. 0.1µF, 50V, X7R, 20%	0281610002
C3	CAP. 0.1µF, 50V, X7R, 20%	0281610002
C4	CAP. 0.1µF, 50V, X7R, 20%	0281610002
C5	CAP. 1µF, 35V, 196D	0281660000
C6	CAP. 1µF, 35V, 196D	0281660000
C7	CAP. 0.1µF, 50V, X7R, 20%	0281610002
C8	CAP. .01µF, 50V, X7R 20%	0281730008
C9	CAP. .01µF, 50V, X7R 20%	0281730008
C10	CAP. .01µF, 50V, X7R 20%	0281730008
C11	CAP. 0.1µF, 50V, X7R, 20%	0281610002
C12	CAP. .47µF, 50V, X7R 20%	0283377771
C13	CAP. .01µF, 50V, X7R 20%	0281730008
C15	CAP. 1µF, 35V, 196D	0281660000
C16	CAP. 0.1µF, 50V, X7R, 20%	0281610002
C17	CAP. 0.1µF, 50V, X7R, 20%	0281610002
C18	CAP. 0.1µF, 50V, X7R, 20%	0281610002
C19	CAP. 0.1µF, 50V, X7R, 20%	0281610002
C20	CAP. 0.1µF, 50V, X7R, 20%	0281610002
C21	CAP. 0.1µF, 50V, X7R, 20%	0281610002
C22	CAP. 0.1µF, 50V, X7R, 20%	0281610002
C23	CAP. 1800PF, 500V, DM19, 2%	0281300003
C24	CAP. 1300PF, 500V, DM19, 2%	0281380007
C25	CAP. 910PF, 500V, DM19, 2%	0281450005
C26	CAP. 680PF, 500V, DM19, 2%	0282290001
C27	CAP. 430PF, 500V, DM15, 2%	0282370005
C28	CAP. 270PF, 500V, DM15, 2%	0280970005
C29	CAP. 200PF, 500V, DM15, 2%	1010430025
C30	CAP. 130PF, 500V, DM15, 2%	0281010005
C31	CAP. 230PF, 500V, DM15, 5%	0276200004
C32	CAP. 130PF, 500V, DM15, 2%	0281010005
C33	CAP. 120PF, 500V, DM15, 2%	0281180008
C34	CAP. 68PF, 500V, DM15, 2%	1000050041
C35	CAP. 43PF, 500V, DM15, 2%	1001240031
C36	CAP. 30PF, 500V, DM15, 2%	1010440021
C37	CAP. 22PF, 500V, CD15, 2%	1000050025
C38	CAP. 12PF, 500V, DM10, 5%	0260280003
C39	CAP. 0.1µF, 50V, X7R, 20%	0281610002
C40	CAP. 1300PF, 500V, DM19, 2%	0281380007
C41	CAP. 1100PF, 500V, DM19, 2%	0281000000
C42	CAP. 680PF, 500V, DM19, 2%	0282290001
C43	CAP. 560PF, 500V, DM19, 2%	0281060002
C44	CAP. 360PF, 500V, DM15, 2%	0281160007
C45	CAP. 240PF, 500V, DM15, 2%	0281140006
C46	CAP. 160PF, 500V, DM15, 2%	1010460021
C47	CAP. 110PF, 500V, DM15, 2%	0281460001
C48	CAP. 1800PF, 500V, DM19, 2%	0281300003
C49	CAP. 1300PF, 500V, DM19, 2%	0281380007
C50	CAP. 910PF, 500V, DM19, 2%	0281450005
C51	CAP. 680PF, 500V, DM19, 2%	0282290001
C52	CAP. 430PF, 500V, DM15, 2%	0282370005
C53	CAP. 270PF, 500V, DM15, 2%	0280970005
C54	CAP. 200PF, 500V, DM15, 2%	1010430025
C55	CAP. 130PF, 500V, DM15, 2%	0281010005
C56	CAP. 0.1µF, 50V, X7R, 20%	0281610002
C57	CAP. 0.1µF, 50V, X7R, 20%	0281610002
C58	CAP. 0.1µF, 50V, X7R, 20%	0281610002
C59	CAP. 0.1µF, 50V, X7R, 20%	0281610002
C60	CAP. 0.1µF, 50V, X7R, 20%	0281610002
C61	CAP. 0.1µF, 50V, X7R, 20%	0281610002
C62	CAP. 0.1µF, 50V, X7R, 20%	0281610002
C63	CAP. 0.1µF, 50V, X7R, 20%	0281610002
C64	CAP. 0.1µF, 50V, X7R, 20%	0281610002
C67	CAP. .01µF, 50V, X7R 20%	0281730008
C70	CAP. .01µF, 50V, X7R 20%	0281730008
C71	CAP. .01µF, 50V, X7R 20%	0281730008
C72	CAP. 22µF, 15V, 196D	0281690006
C73	CAP. 0.1µF, 50V, X7R, 20%	0281610002
C74	CAP. 0.1µF, 50V, X7R, 20%	0281610002
C75	CAP. .01µF, 50V, X7R 20%	0281730008
C76	CAP. .01µF, 50V, X7R 20%	0281730008
C77	CAP. 15µF, 35V	0282240004
C78	CAP. 1µF, 35V, 196D	0281660000
C82	CAP. 30PF, 500V, DM15, 2%	1010440021
C83	CAP. 0.1µF, 50V, X7R, 20%	0281610002
C85	CAP. 130PF, 500V, DM15, 2%	0281010005
C87	CAP. 130PF, 500V, DM15, 2%	0281010005
C88	CAP. 2.2µF, 35V, T368	0273950002
C89	CAP. 30PF, 500V, DM15, 2%	1010440021
C90	CAP. 1µF, 35V, 196D	0281660000
C91	CAP. 22µF, 15V, 196D	0281690006
C92	CAP. 22µF, 15V, 196D	0281690006
C93	CAP. .01µF, 50V, X7R 20%	0281730008
C94	CAP. .01µF, 50V, X7R 20%	0281730008
C95	CAP. 22µF, 15V, 196D	0281690006
C96	CAP. .01µF, 50V, X7R 20%	0281730008
C97	CAP. .01µF, 50V, X7R 20%	0281730008
C98	CAP. .01µF, 50V, X7R 20%	0281730008
C99	CAP. 0.1µF, 50V, X7R, 20%	0281610002
C100	CAP. .01µF, 50V, X7R 20%	0281730008
C102	CAP. 0.1µF, 50V, X7R, 20%	0281610002
C103	CAP. 0.1µF, 50V, X7R, 20%	0281610002
C104	CAP. 1000PF, 500V, DM19, 5%	0249270005
C105	CAP. 750PF, 300V, DM15, 5%	0275410005
C106	CAP. .47µF, 50V, X7R 20%	0283377771
C107	CAP. 220PF, 500V, DM15, 5%	0285957775
C108	CAP. 680PF, 300V, DM15, 5%	0286240009
C109	CAP. .01µF, 50V, X7R 20%	0281730008
C110	CAP. .01µF, 50V, X7R 20%	0281730008
C111	CAP. 0.1µF, 50V, X7R, 20%	0281610002
C112	CAP. .01µF, 50V, X7R 20%	0281730008
C113	CAP. 0.1µF, 50V, X7R, 20%	0281610002
C114	CAP. .01µF, 50V, X7R 20%	0281730008
C115	CAP. 0.1µF, 50V, X7R, 20%	0281610002
C116	CAP. 0.1µF, 50V, X7R, 20%	0281610002
C117	CAP. 0.1µF, 50V, X7R, 20%	0281610002
C118	CAP. .01µF, 50V, X7R 20%	0281730008
C119	CAP. 0.1µF, 50V, X7R, 20%	0281610002
C120	CAP. .01µF, 50V, X7R 20%	0281730008
C121	CAP. .01µF, 50V, X7R 20%	0281730008
C122	CAP. .01µF, 50V, X7R 20%	0281730008
C123	CAP. 0.1µF, 50V, X7R, 20%	0281610002
C124	CAP. 0.1µF, 50V, X7R, 20%	0281610002
C125	CAP. 0.1µF, 50V, X7R, 20%	0281610002
C126	CAP. 0.1µF, 50V, X7R, 20%	0281610002
C127	CAP. 0.1µF, 50V, X7R, 20%	0281610002
C128	CAP. 47µF, 20V, 196D	0281700001
C129	CAP. 1µF, 35V, 196D	0281660000
C130	CAP. 0.1µF, 50V, X7R, 20%	0281610002
C131	CAP. .01µF, 50V, X7R 20%	0281730008
C133	CAP. 47µF, 20V, 196D	0281700001
C134	CAP. 0.1µF, 50V, X7R, 20%	0281610002
C135	CAP. 0.1µF, 50V, X7R, 20%	0281610002
C136	CAP. 1µF, 35V, 196D	0281660000
C137	CAP. 0.1µF, 50V, X7R, 20%	0281610002
C138	CAP. 0.1µF, 50V, X7R, 20%	0281610002
C139	CAP. 150PF, 500V, DM10, 5%	0293430004
C140	CAP. 0.1µF, 50V, X7R, 20%	0281610002
C141	CAP. .01µF, 50V, X7R 20%	0281730008
C142	CAP. 0.1µF, 50V, X7R, 20%	0281610002
C143	CAP. 0.1µF, 50V, X7R, 20%	0281610002
C145	CAP. 0.1µF, 50V, X7R, 20%	0281610002
C150	CAP. .01µF, 50V, X7R 20%	0281730008
C151	CAP. .01µF, 50V, X7R 20%	0281730008
C152	CAP. .01µF, 50V, X7R 20%	0281730008
C153	CAP. .01µF, 50V, X7R 20%	0281730008
C154	CAP. .01µF, 50V, X7R 20%	0281730008
C155	CAP. .01µF, 50V, X7R 20%	0281730008
C156	CAP. .01µF, 50V, X7R 20%	0281730008
C159	CAP. 0.1µF, 50V, X7R, 20%	0281610002
C160	CAP. 0.1µF, 50V, X7R, 20%	0281610002
C161	CAP. 0.1µF, 50V, X7R, 20%	0281610002
C162	CAP. 2200PF, 500V, DM19, 5%	0299650006
C163	CAP. 10PF, 500V, DM10	0259830003
C164	CAP. 220PF, 500V, DM10, 2%	1010870009
C165	CAP. .01µF, 50V, X7R 20%	0281730008
C166	CAP. .01µF, 50V, X7R 20%	0281730008
C167	CAP. .01µF, 50V, X7R 20%	0281730008
C168	CAP. .01µF, 50V, X7R 20%	0281730008
CR1	DIODE, RECTIFIER 1N4004	0405180004
CR2	DIODE, RECTIFIER 1N4004	0405180004
CR3	DIODE, RECTIFIER 1N4004	0405180004
CR4	DIODE, RECTIFIER 1N4004	0405180004
CR5	DIODE, RECTIFIER 1N4004	0405180004
CR6	DIODE, RECTIFIER 1N4004	0405180004
CR7	DIODE, RECTIFIER 1N4004	0405180004
CR8	DIODE, RECTIFIER 1N4004	0405180004
CR9	DIODE, RECTIFIER 1N4004	0405180004
CR10	DIODE, RECTIFIER 1N4004	0405180004
CR11	DIODE, RECTIFIER 1N4004	0405180004
CR12	DIODE, RECTIFIER 1N4004	0405180004
CR13	DIODE, RECTIFIER 1N4004	0405180004
CR14	DIODE, RECTIFIER 1N4004	0405180004
CR15	DIODE, RECTIFIER 1N4004	0405180004
CR16	DIODE, RECTIFIER 1N4004	0405180004
CR17	DIODE, RECTIFIER 1N4004	0405180004
CR18	DIODE, RECTIFIER 1N4004	0405180004
CR19	DIODE, RECTIFIER 1N4004	0405180004
CR20	DIODE, RECTIFIER 1N4004	0405180004
CR21	DIODE, RECTIFIER 1N4004	0405180004
CR22	DIODE, RECTIFIER 1N4004	0405180004
CR24	DIODE, SIGNAL, SIL. 1N4454	0405270003
CR25	DIODE, SIGNAL, SIL. 1N4454	0405270003
CR26	DIODE, PIN 1N5767	0405570007
CR27	DIODE, LED, RED, PC MOUNT	1008480029
CR28	DIODE, PIN 1N5767	0405570007
CR29	DIODE, PIN 1N5767	0405570007
CR36	DIODE, SIGNAL, SIL. 1N4454	0405270003
FB1	FERRITE BEAD, .400L	1010900013
L1	INDUCTOR, MOLDED, 68µH, 5%	0651650003
L2	INDUCTOR, MOLDED, 47µH, 5%	0652680003
L3	INDUCTOR, MOLDED, 47µH, 5%	0652680003
L4	INDUCTOR, MOLDED, 120µH, 10%	0659330008
L5	INDUCTOR, MOLDED, 47µH, 5%	0652680003
L6	INDUCTOR, MOLDED, 47µH, 5%	0652680003
L7	INDUCTOR, MOLDED, 3.3µH, 5%	0658920006
L8	INDUCTOR, MOLDED, 2.2µH, 5%	0649890001
L9	INDUCTOR, MOLDED, 1.5µH, 5%	0649270002
L10	INDUCTOR, MOLDED, 1.2µH, 5%	0649910001
L11	INDUCTOR, MOLDED, 0.75µH, 5%	1010480022
L12	INDUCTOR, MOLDED, 0.47µH, 5%	0649410009
L13	INDUCTOR, MOLDED, 0.33µH, 5%	1010490028
L14	INDUCTOR, MOLDED, 22µH, 5%	0650000005
L22	INDUCTOR, MOLDED, 5.6µH, 5%	0650360001
L23	INDUCTOR, MOLDED, 3.9µH, 5%	0650480007
L24	INDUCTOR, MOLDED, 3.0µH, 5%	1010500023
L25	INDUCTOR, MOLDED, 2.0µH, 5%	1010000039
L26	INDUCTOR, MOLDED, 1.2µH, 5%	0649910001
L27	INDUCTOR, MOLDED, 0.82µH, 5%	0652320007
L28	INDUCTOR, MOLDED, 0.56µH, 5%	0649530004
L29	INDUCTOR, MOLDED, 0.39µH, 5%	0649770005
L30	INDUCTOR, MOLDED, 33µH, 5%	0659690004
L31	INDUCTOR, MOLDED, 33µH, 5%	0659690004
L32	INDUCTOR, MOLDED, 18µH, 5%	1010040031
L33	INDUCTOR, MOLDED, 15µH, 5%	0659070006
L34	INDUCTOR, MOLDED, 12µH, 5%	0652700004
L35	INDUCTOR, MOLDED, 7.5µH, 5%	1010050036
L36	INDUCTOR, MOLDED, 4.7µH, 5%	0651910005
L37	INDUCTOR, MOLDED, 3.3µH, 5%	0658920006
L38	INDUCTOR, MOLDED, 22µH, 5%	0650000005
L46	INDUCTOR, MOLDED, 47µH, 5%	0652680003
L47	INDUCTOR, MOLDED, 3.3µH, 5%	0658920006
L48	INDUCTOR, MOLDED, 2.2µH, 5%	0649890001
L49	INDUCTOR, MOLDED, 1.5µH, 5%	0649270002
L50	INDUCTOR, MOLDED, 1.2µH, 5%	0649910001
L51	INDUCTOR, MOLDED, 0.75µH, 5%	1010480022
L52	INDUCTOR, MOLDED, 0.47µH, 5%	0649410009
L53	INDUCTOR, MOLDED, 0.33µH, 5%	1010490028
L54	INDUCTOR, MOLDED, 47µH, 5%	0652680003
L55	INDUCTOR, MOLDED, 47µH, 5%	0652680003
L56	INDUCTOR, MOLDED, 120µH, 5%	0646660004
L57	INDUCTOR, MOLDED, 47µH, 5%	0652680003
L58	INDUCTOR, MOLDED, 22µH, 5%	0650000005
L59	INDUCTOR, MOLDED, 6.8µH, 10%	0646040006
L60	INDUCTOR, MOLDED, 0.27µH, 5%	0649390008
L61	INDUCTOR, MOLDED, 0.39µH, 5%	0649770005
L62	INDUCTOR, MOLDED, 0.27µH, 5%	0649390008
L63	INDUCTOR, MOLDED, 22µH, 5%	0650000005
L64	INDUCTOR, MOLDED, 3.9µH, 5%	0650480007
L65	INDUCTOR, MOLDED, 3.9µH, 5%	0650480007
L66	INDUCTOR, MOLDED, 47µH, 5%	0652680003
L67	INDUCTOR, MOLDED, 4.7µH, 5%	0651910005
L68	CHOKE, POWER	8076104700
L70	INDUCTOR, MOLDED, 120µH, 10%	0659330008
L71	INDUCTOR, MOLDED, 2.7µH, 5%	0652180001
L76	INDUCTOR, MOLDED, 3.9µH, 5%	0650480007
L77	INDUCTOR, MOLDED, 22µH, 5%	0650000005
L78	INDUCTOR, MOLDED, 220µH, 5%	0650500008
L79	INDUCTOR, MOLDED, 430µH, 5%	0659100002
L80	FERRITE BEAD, 850 PERM	1010410032
L81	FERRITE BEAD, 850 PERM	1010410032
L82	FERRITE BEAD, 850 PERM	1010410032
L83	FERRITE BEAD, 850 PERM	1010410032
L84	FERRITE BEAD, 850 PERM	1010410032
L85	FERRITE BEAD, 850 PERM	1010410032
L86	FERRITE BEAD, 850 PERM	1010410032
L87	FERRiTE BEAD, 850 PERM	1010410032
P3	CONNECTOR, RF,RIGHT ANGLE	1010730002
P4	CONNECTOR, RF,RIGHT ANGLE	1010730002

Figure 5.8.14 PC Assembly, Front End 1A2A5, page 1/4.

1003AP

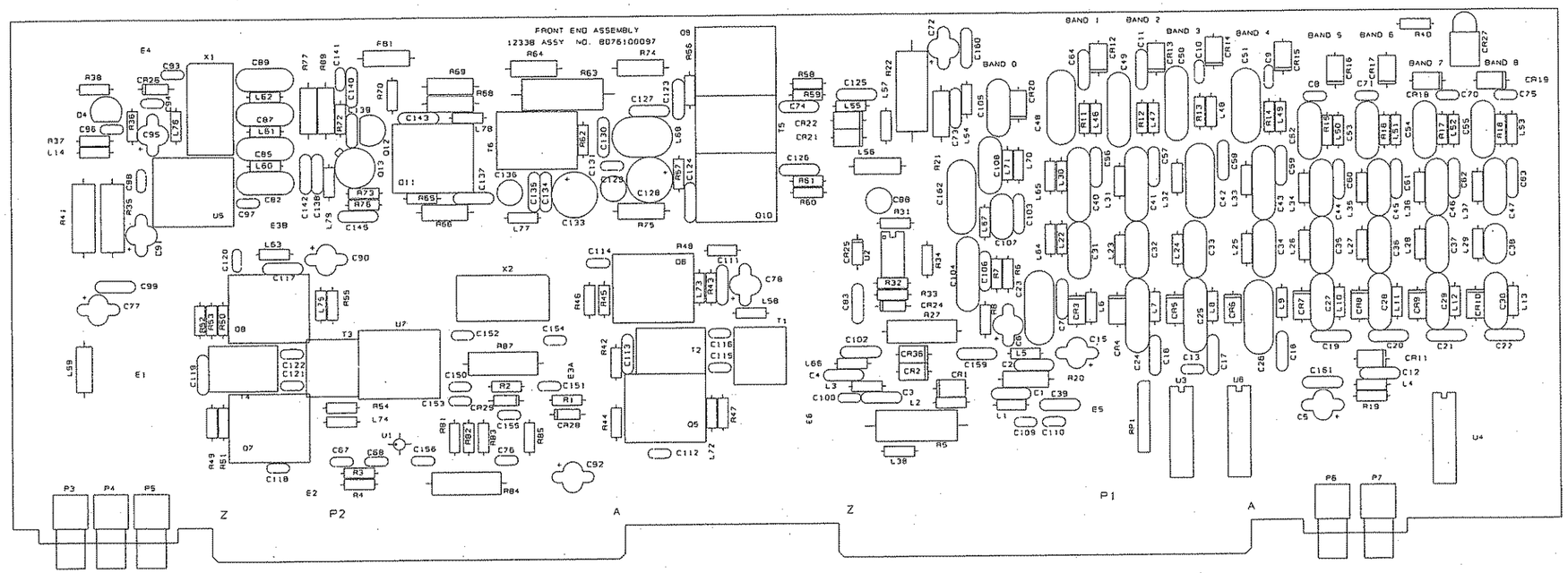

P5	CONNECTOR, RF,RIGHT ANGLE	1010730002
P6	CONNECTOR, RF,RIGHT ANGLE	1010730002
P7	CONNECTOR, RF,RIGHT ANGLE	1010730002
Q4	TRANSISTOR, NPN, SI. 2N4124	0448010003
Q5	TRANSISTOR, NPN, SI. 2N3866	0448140004
Q6	TRANSISTOR, NPN, SI. 2N3866	0448140004
Q7	TRANSISTOR, NPN, SI. 2N3866	0448140004
Q8	TRANSISTOR, NPN, SI. 2N3866	0448140004
Q9	TRANSISTOR 2N3553	1010320025
Q10	TRANSISTOR 2N3553	1010320025
Q11	TRANSISTOR, NPN, SI. 2N3866	0448140004
Q12	TRANSISTOR, PNP, SI. 2N2907A	0448390001
Q13	TRANSISTOR, NPN, SI. 2N3866	0448140004
R1	RESISTOR 820, 10%, 1/4W	0178210005
R2	RESISTOR 820, 10%, 1/4W	0178210005
R3	RESISTOR 47, 10%, 1/4W	0179360001
R4	RESISTOR 390, 10%, 1/4W	0178330001
R5	RESISTOR, 220, 2W	1008150029
R6	RESISTOR 270, 10%, 1/4W	0178450006
R7	RESISTOR 18, 10%, 1/4W	0184590001
R8	RESISTOR 270, 10%, 1/4W	0178450006
R11	RESISTOR 10K, 10%, 1/4W	0170410005
R12	RESISTOR 10K, 10%, 1/4W	0170410005
R13	RESISTOR 10K, 10%, 1/4W	0170410005
R14	RESISTOR 10K, 10%, 1/4W	0170410005
R15	RESISTOR 10K, 10%, 1/4W	0170410005
R16	RESISTOR 10K, 10%, 1/4W	0170410005
R17	RESISTOR 10K, 10%, 1/4W	0170410005
R18	RESISTOR 10K, 10%, 1/4W	0170410005

R19	RESISTOR 10K, 10%, 1/4W	0170410005
R20	RESISTOR 82, 10%, 1/2W	1010200038
R21	RESISTOR 82, 10%, 1/2W	1010200038
R22	RESISTOR, 220, 2W	1008150029
R27	RESISTOR 47, 10%, 1W	0164990003
R31	RESISTOR 100K, 10%, 1/4W	0170390004
R32	RESISTOR 12K, 10%, 1/4W	0183180003
R33	RESISTOR 1K, 10%, 1/4W	0171560001
R34	RESISTOR 10K, 10%, 1/4W	0170410005
R35	RESISTOR 150, 10%, 1W	0187840008
R36	RESISTOR 10K, 10%, 1/4W	0170410005
R37	RESISTOR 1K, 10%, 1/4W	0171560001
R38	RESISTOR 18, 10%, 1/4W	0184590001
R40	RESISTOR 1K, 10%, 1/4W	0171560001
R41	RESISTOR 100, 10%, 1W	0165540001
R42	RESISTOR 1K, 10%, 1/4W	0171560001
R43	RESISTOR 10, 5%, 1/4W	0177160004
R44	RESISTOR 270, 10%, 1/4W	0178450006
R45	RESISTOR 1K, 10%, 1/4W	0171560001
R46	RESISTOR 270, 10%, 1/4W	0178450006
R47	RESISTOR 47, 10%, 1/4W	0179360001
R48	RESISTOR 47, 10%, 1/4W	0179360001
R49	RESISTOR 1K, 10%, 1/4W	0171560001
R50	RESISTOR 10, 5%, 1/4W	0177160004
R51	RESISTOR 270, 10%, 1/4W	0178450006
R52	RESISTOR 1K, 10%, 1/4W	0171560001
R53	RESISTOR 270, 10%, 1/4W	0178450006
R54	RESISTOR 47, 10%, 1/4W	0179360001
R55	RESISTOR 47, 10%, 1/4W	0179360001

R56	RESISTOR 560, 5%, 1/4W	0183200004
R57	RESISTOR 560, 5%, 1/4W	0183200004
R58	RESISTOR, 4.7, 5%, 1/4W	1001060024
R59	RES,2.7, 10%, 1/4W	1010040022
R60	RESISTOR, 4.7, 5%, 1/4W	1001060024
R61	RES,2.7, 10%, 1/4W	1010040022
R62	RESISTOR 68, 10%, 1/4W	0187960003
R63	RESISTOR 120, 10%, 2W	0194530001
R64	RESISTOR 18, 5%, 1/2W	0184730007
R65	RESISTOR 22, 10%, 1/4W	0192690001
R66	RESISTOR 39, 10%, 1/2W	0165920009
R68	RESISTOR 180, 10%, 1/2W	0173640001
R69	RESISTOR 120, 10%, 1/2W	0186430001
R70	RESISTOR 270, 10%, 1/4W	0178450006
R72	RESISTOR 56, 10%, 1/4W	0174290004
R73	RESISTOR 180, 10%, 1/4W	0175220000
R74	RESISTOR, 1.5, 10%, 1/2W	1010350021
R75	RESISTOR, 1.5, 10%, 1/2W	1010350021
R76	RESISTOR 560, 5%, 1/4W	0183200004
R77	RESISTOR 680, 10%, 1/2W	0167500007
R84	RESISTOR 100, 10%, 1W	0165540001
R85	RESISTOR 820, 10%, 1/4W	0178210005
R87	RESISTOR 100, 10%, 1W	0165540001
R89	RESISTOR 150, 10% 1/2W	1010400037
R90	RESISTOR 470, 5%, 1/8W	1010804715
RP1	RES NTWK 6 PIN SIP 4.7K COM	1006200037
T1	TRANSFORMER, INPUT, RF AMP	8076108705
T2	TRANSFORMER, FEEDBACK,RF AMP	8076108900
T3	TRANSFORMER, INPUT, RF AMP	8076108705

T4	TRANSFORMER, FEEDBACK,RF AMP	8076108900
T5	TRANSFORMER,OUTPUT,PREDR	8076104904
T6	TRANSFORMER,INTERSTAGE,PREDR	8076104807
U1	IC LINEAR MAR-4	1010900005
U2	IC. LINEAR LM311N	1005760021
U3	IC DIGITAL 74HC238	1011430002
U4	IC. DIGITAL ULN2003A	1005630038
U5	IC. LINEAR MWA130	1010380036
U6	IC. DIGITAL ULN2003A	1005630038
U7	IC. LINEAR MWA130	1010380036
X1	MIXER, TAK-1H	1010400029
X2	MIXER, TAK-1H	1010400029
XQ5	HEATSINK, CUP CLIP, TO-5	1011440008
XQ6	HEATSINK, CUP CLIP, TO-5	1011440008
XQ7	HEATSINK, CUP CLIP, TO-5	1011440008
XQ8	HEATSINK, CUP CLIP, TO-5	1011440008
XQ9	HEATSINK, CUP CLIP, TO-5	1011440008
XQ10	HEATSINK, CUP CLIP, TO-5	1011440008
XQ11	HEATSINK, CUP CLIP, TO-5	1011440008
XU5	HEATSINK, CUP CLIP, T0-5	1011070014
XU7	HEATSINK, CUP CLIP, T0-5	1011070014
	MTG PLATE, FRONT END BD	8076101603
	SOCKET, LEAD	1011060019

Figure 5.8.14 PC Assembly, Front End 1A2A5, page 2/4.

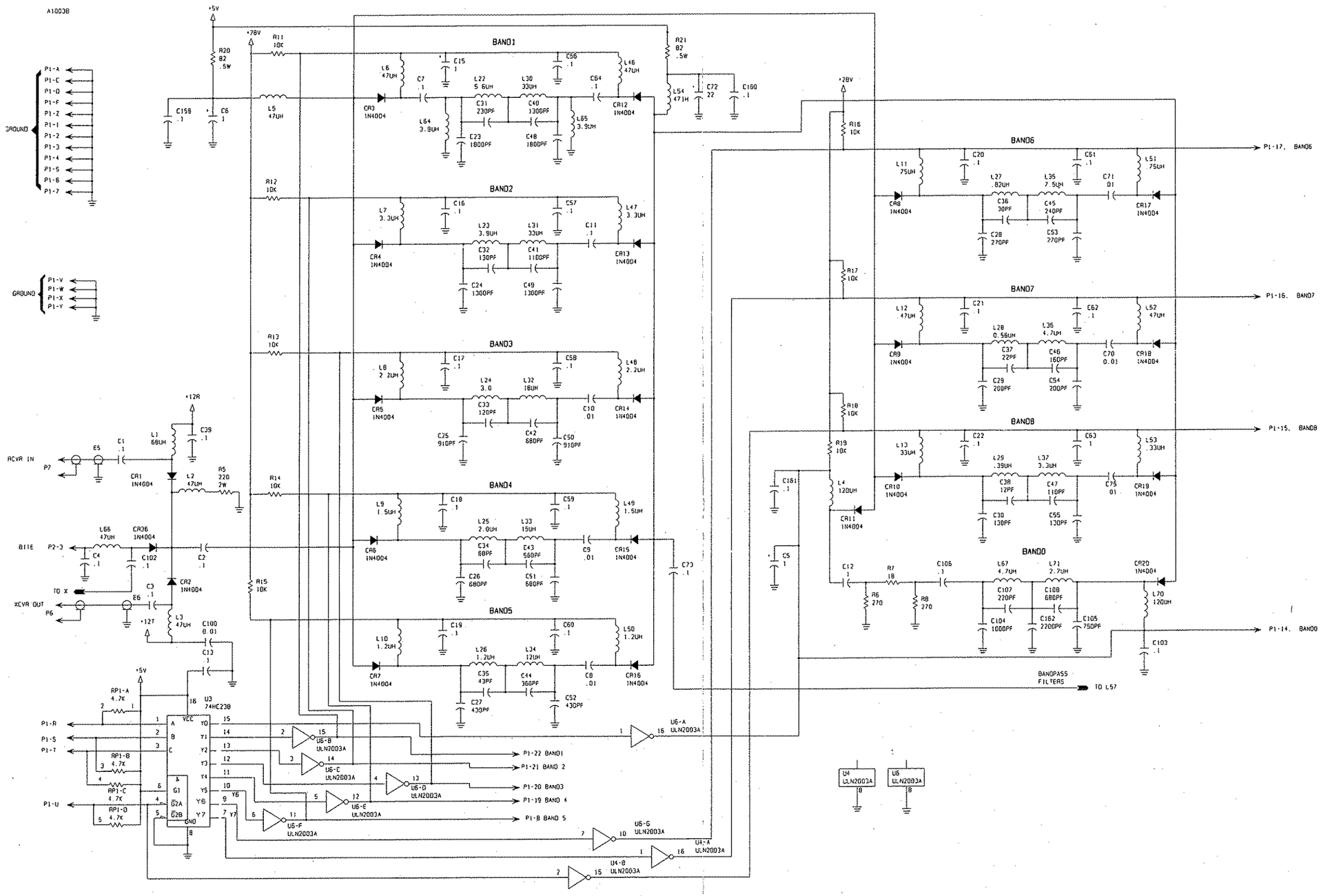

Figure 5.8.14 PC Assembly, Front End 1A2A5, page 3/4.

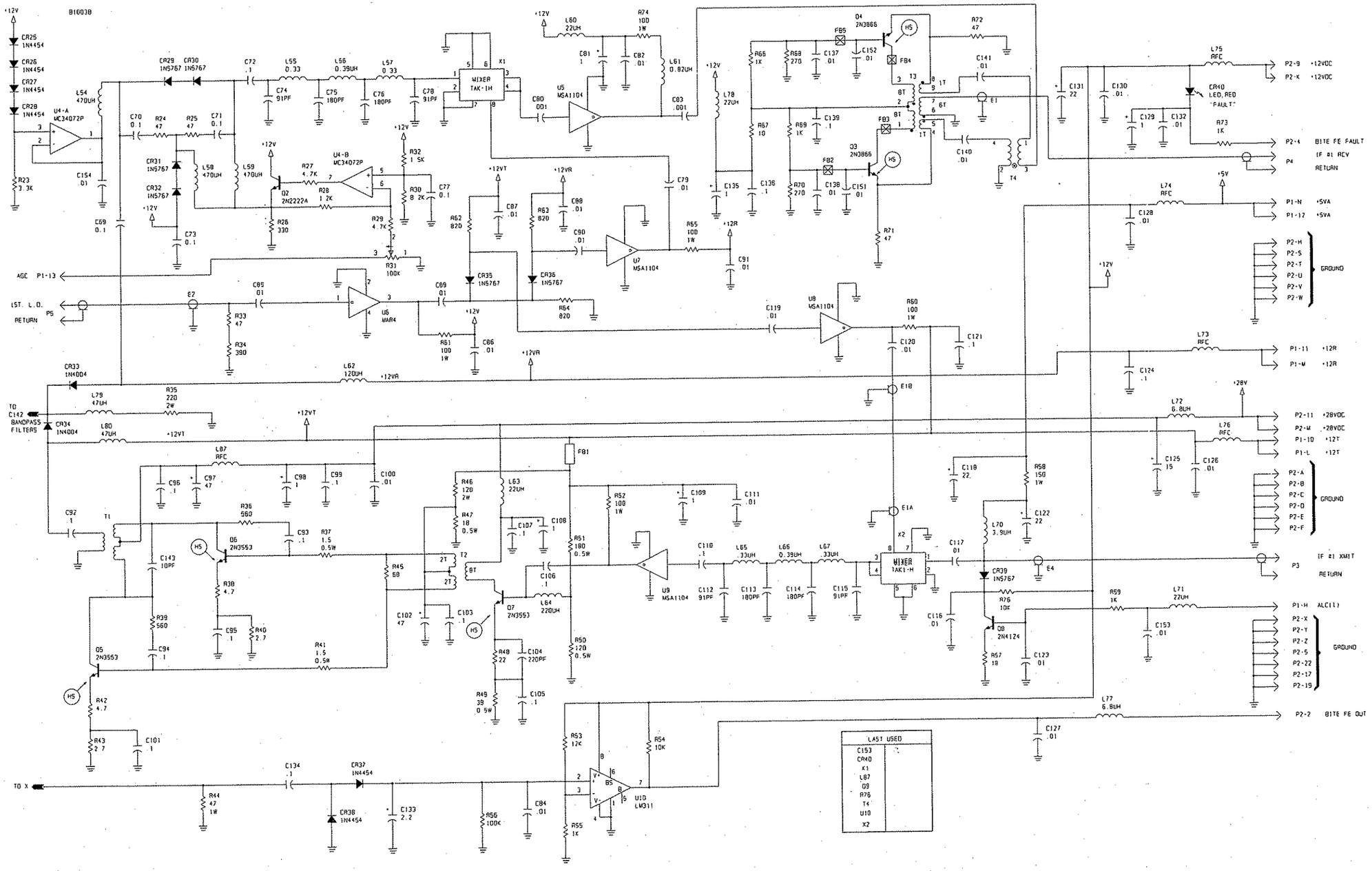

Figure 5.8.14 PC Assembly, Front End 1A2A5, page 4/4.

PC ASSY, REFERENCE DRIVER 1A2A6

	PC ASSY, REFERENCE DRIVER 1A2A6	8076120098
C1	CAP. .47µF, 50V, X7R 20%	0283377771
C2	CAP. .47µF, 50V, X7R 20%	0283377771
C3	CAP. .47µF, 50V, X7R 20%	0283377771
C4	CAP. .47µF, 50V, X7R 20%	0283377771
C5	CAP. .01µF, 50V, X7R 20%	0281730008
C6	CAP. .01µF, 50V, X7R 20%	0281730008
C7	CAP. .01µF, 50V, X7R 20%	0281730008
C8	CAP. .01µF, 50V, X7R 20%	0281730008
C9	CAP. .01µF, 50V, X7R 20%	0281730008
C10	CAP. .01µF, 50V, X7R 20%	0281730008
C11	CAP. 0.001µF, 100V, X7R, 20%	0281630003
C12	CAP. 22µF, 15V, T368	0296660001
CR1	DIODE, SIGNAL, SIL. 1N4454	0405270003
CR2	DIODE, SIGNAL, SIL. 1N4454	0405270003
CR3	DIODE, SIGNAL, SIL. 1N4454	0405270003
CR4	DIODE, SIGNAL, SIL. 1N4454	0405270003
CR5	DIODE, LED, AMBER PC MOUNT	1011480000
CR6	DIODE, LED, AMBER PC MOUNT	1011480000
CR7	DIODE, LED, AMBER PC MOUNT	1011480000
CR8	DIODE, SIGNAL, SIL. 1N4454	0405270003
CR9	DIODE, LED, RED, PC MOUNT	1008480029
L1	INDUCTOR, MOLDED, 47µH, 5%	0652680003
L2	INDUCTOR, MOLDED, 47µH, 5%	0652680003
Q1	TRANSISTOR, NPN, SI. 2N4124	0448010003
Q2	TRANSISTOR, PNP, SI 2N4126	0448020009
Q3	TRANSISTOR, NPN, SI. 2N4124	0448010003
Q4	TRANSISTOR, PNP, SI 2N4126	0448020009
R1	RESISTOR 47, 5%, 1/8W	1010804707
R2	RESISTOR 47, 5%, 1/8W	1010804707
R3	RESISTOR 1.8K, 5%, 1/8W	1010801821
R4	RESISTOR 22, 5%, 1/8W	1010802208
R5	RESISTOR 1.8K, 5%, 1/8W	1010801821
R6	RESISTOR 22, 5%, 1/8W	1010802208
R7	RESISTOR 2.2K, 5%, 1/8W	1010802224
R8	RESISTOR 10, 5%, 1/8W	1010801007
R9	RESISTOR 10, 5%, 1/8W	1010801007
R10	RESISTOR 2.2K, 5%, 1/8W	1010802224
R11	RESISTOR 390, 5%, 1/8W	1010803913
R12	RESISTOR 3.3K, 5%, 1/8W	1010803328
R13	RESISTOR 6.8K, 5%, 1/8W	1010806823
R14	RESISTOR 390, 5%, 1/8W	1010803913
R15	RESISTOR 1K, 5%, 1/8W	1010801023
R16	RESISTOR 560, 10%, 1/2W	0185900003
R17	RESISTOR 270, 10%, 1/4W	0178450006
R18	RESISTOR 4.7K, 5%, 1/8W	1010804723
R19	RESISTOR 5.6K, 5%, 1/8W	1010805622
R20	RESISTOR 10K, 5%, 1/8W	1010801031
U1	IC. LINEAR LM340T5	0448600005
U2	IC. DIGITAL 74HC14	1006490027
	HEADER, PIN STRIP, 8 PIN	1010700014
	SHIELD, CAN	8040051509
	SHUNT, 8 PIN, .100 SPACING	1010720015
	STANDOFF, M-F, 4-40 X. 500L	1011000008

1112AP

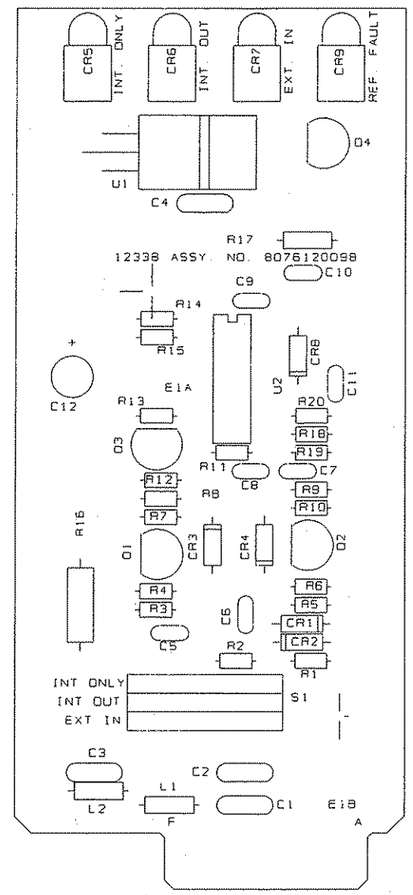

Figure 5.8.15 PC Assembly, Reference Driver 1A2A6, page 1/2.

A1112B

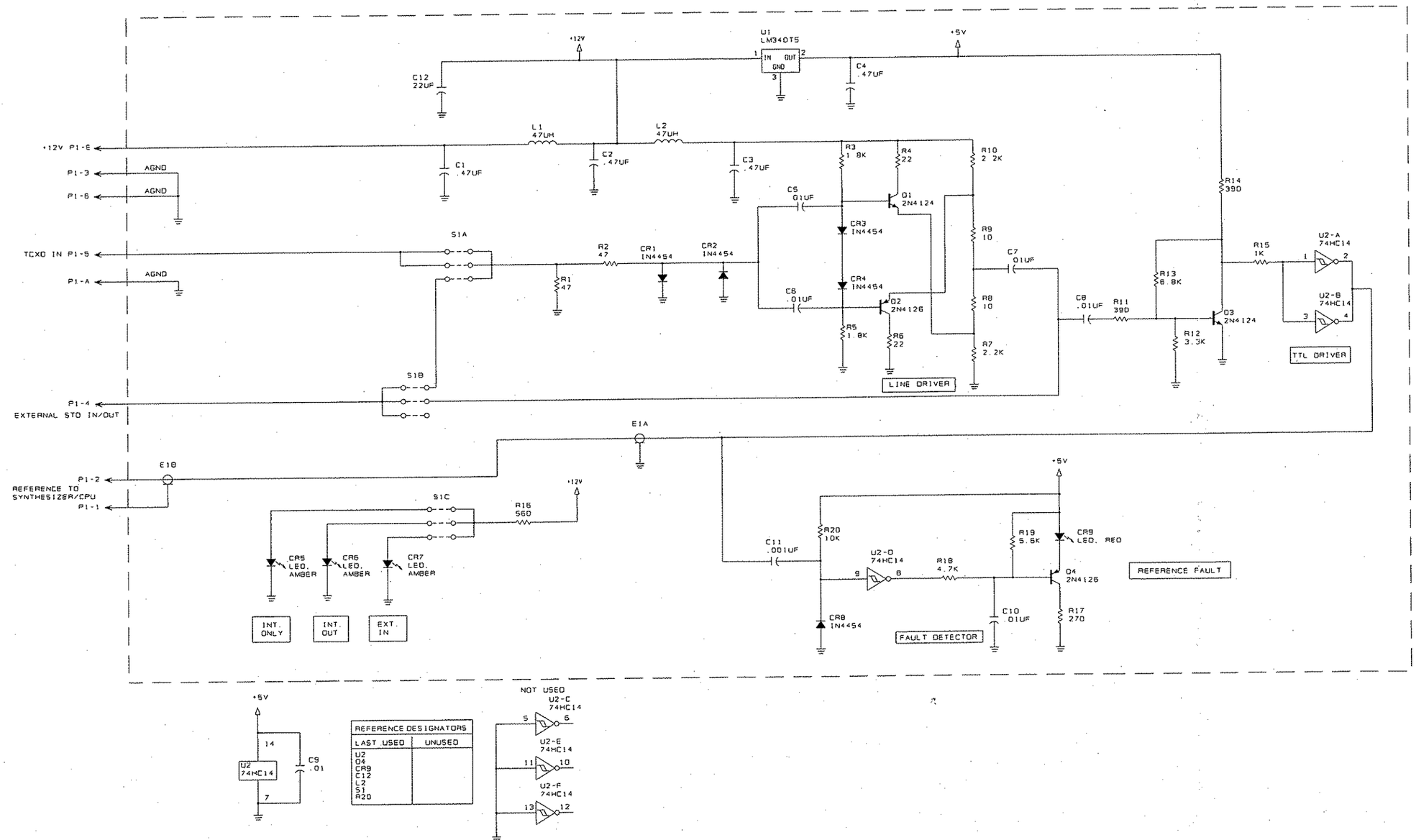

Figure 5.8.15 PC Assembly, Reference Driver 1A2A6, page 2/2.

THIS PAGE INTENTIONALLY LEFT BLANK.

PC ASSY, I/O BOARD 1A2A8

	PC ASSY, I/O BOARD 3A2A3	8076110092
C1	CAP. .01µF, 50V, X7R 20%	0281730008
C2	CAP. 6.8µF, 20V, T368	0296780006
C3	CAP. .01µF, 50V, X7R 20%	0281730008
C4	CAP. .01µF, 50V, X7R 20%	0281730008
C5	CAP. .01µF, 50V, X7R 20%	0281730008
C6	CAP. .01µF, 50V, X7R 20%	0281730008
C7	CAP. .01µF, 50V, X7R 20%	0281730008
C8	CAP. .01µF, 50V, X7R 20%	0281730008
C9	CAP. 22µF, 15V, 196D	0281690006
C10	CAP. 22µF, 15V, 196D	0281690006
C11	CAP. 47µF, 20V, 196D	0281700001
C12	CAP. .01µF, 50V, X7R 20%	0281730008
C13	CAP. .01µF, 50V, X7R 20%	0281730008
C14	CAP. .01µF, 50V, X7R 20%	0281730008
C15	CAP. 10µF, 20V	1007290005
C16	CAP. 22µF, 15V, 196D	0281690006
C17	CAP. 22µF, 15V, 196D	0281690006
C18	CAP. .01µF, 50V, X7R 20%	0281730008
C19	CAP. 47µF, 20V, 196D	0281700001
C20	CAP. .01µF, 50V, X7R 20%	0281730008
C21	CAP. .01µF, 50V, X7R 20%	0281730008
C22	CAP. .01µF, 50V, X7R 20%	0281730008
C23	CAP. .01µF, 50V, X7R 20%	0281730008
C24	CAP. .01µF, 50V, X7R 20%	0281730008
C25	CAP. .01µF, 50V, X7R 20%	0281730008
C26	CAP. .01µF, 50V, X7R 20%	0281730008
C27	CAP. .01µF, 50V, X7R 20%	0281730008
C28	CAP. .01µF, 50V, X7R 20%	0281730008
C29	CAP. .01µF, 50V, X7R 20%	0281730008
C30	CAP. .01µF, 50V, X7R 20%	0281730008
C31	CAP. .01µF, 50V, X7R 20%	0281730008
C32	CAP. .01µF, 50V, X7R 20%	0281730008
C33	CAP. .01µF, 50V, X7R 20%	0281730008
C34	CAP. .01µF, 50V, X7R 20%	0281730008
C35	CAP. .01µF, 50V, X7R 20%	0281730008
CR1	DIODE, LED, RED, PC MOUNT	1008480029
CR2	DIODE, RECTIFIER 1N4004	0405180004
CR3	DIODE, RECTIFIER 1N4004	0405180004
J1	CONNECTOR, POWER, 9 PIN FEMALE	1011090015
K1	RELAY, DPDT, 12VDC	1005090009
K2	RELAY, DPDT, 12VDC	1005090009
L1	INDUCTOR, MOLDED, 33µH, 5%	0659690004
L2	INDUCTOR, MOLDED, 33µH, 5%	0659690004
L3	INDUCTOR, MOLDED, 33µH, 5%	0659690004
L4	INDUCTOR, MOLDED, 33µH, 5%	0659690004
L5	INDUCTOR, MOLDED, 33µH, 5%	0659690004
L6	INDUCTOR, MOLDED, 33µH, 5%	0659690004
L7	INDUCTOR, MOLDED, 33µH, 5%	0659690004
L8	INDUCTOR, MOLDED, 33µH, 5%	0659690004
P1	CONNECTOR,HEADER 40 PIN	1010780000
P2	CONNECTOR, HEADER, 14 PIN MALE	1011210142
Q1	TRANSISTOR, NPN, SI. 2N4124	0448010003
Q2	TRANSISTOR, NPN, SI. 2N4124	0448010003
R1	RESISTOR 680, 10%, 1/4W	0176630007
R2	RESISTOR 100K, 10%, 1/4W	0170390004
R3	RESISTOR 10K, 10%, 1/4W	0170410005
R4	RESISTOR 10K, 10%, 1/4W	0170410005
R5	RESISTOR 10K, 10%, 1/4W	0170410005
R6	RESISTOR 100K, 10%, 1/4W	0170390004
R7	RESISTOR 10K, 10%, 1/4W	0170410005
R8	RESISTOR 10K, 5%, 1/8W	1010801031
R9	RESISTOR 10K, 5%, 1/8W	1010801031

R10	RESISTOR 82, 10%, 1/4W	0184610001
R11	RESISTOR 10K, 5%, 1/8W	1010801031
R12	RESISTOR 68, 5%, 1/8W	1010806807
R13	RESISTOR 68, 5%, 1/8W	1010806807
R14	RESISTOR 68, 5%, 1/8W	1010806807
R15	RESISTOR 68, 5%, 1/8W	1010806807
RP1	RES NTWK 10 PIN SIP 10K COM	1006130021
RP2	RES NTWK 10 PIN SIP 10K COM	1006130021
RP3	RES NTWK 10 PIN SIP 10K COM	1006130021
U1	CRYSTAL OSCILLATOR, 7.3728MHZ	1008850012
U2	IC, DIGITAL 74HC00	1008190004
U3	IC, DIGITAL 74HC00	1008190004
U4	IC. DIGITAL 4078B	1010460030
U5	IC. DIGITAL 74HC374	1006450033
U6	IC. DIGITAL 74HC374	1006450033
U7	IC. DIGITAL 74HC04	1010280023
U8	IC. DIGITAL 74HC32	1006470026
U9	IC. DIGITAL 2681	1008790010
U10	IC. DIGITAL 80C85A	1007400013
U11	IC. DIGITAL 74HC138	1006480013
U12	IC. DIGITAL 74HC125	1008810011
U13	IC. DIGITAL 74HC373	1006480030
U14	IC. DIGITAL 74HC32	1006470026
U15	IC. DIGITAL RAM UPD446D	1006430008
U16	IC. DIGITAL ICL232	1010510011
U17	IC. DIGITAL ICL232	1010510011
U18	IC. DIGITAL 75176	1011100011
U19	IC. DIGITAL 75176	1011100011
U20	EPROM, W/IO SOFTWARE RCU-9310	8078113293
XU9	SOCKET, IC, 40 PIN TAILLESS	1006620010
XU10	SOCKET, IC, 40 PIN TAILLESS	1006620010
XU20	SOCKET, IC, 28 PIN TAILLESS	1006620001
	FERRITE BEAD, 850 PERM	1010410032
	MOUNTING PLATE, I/O BOARD	8076111200

1079DP

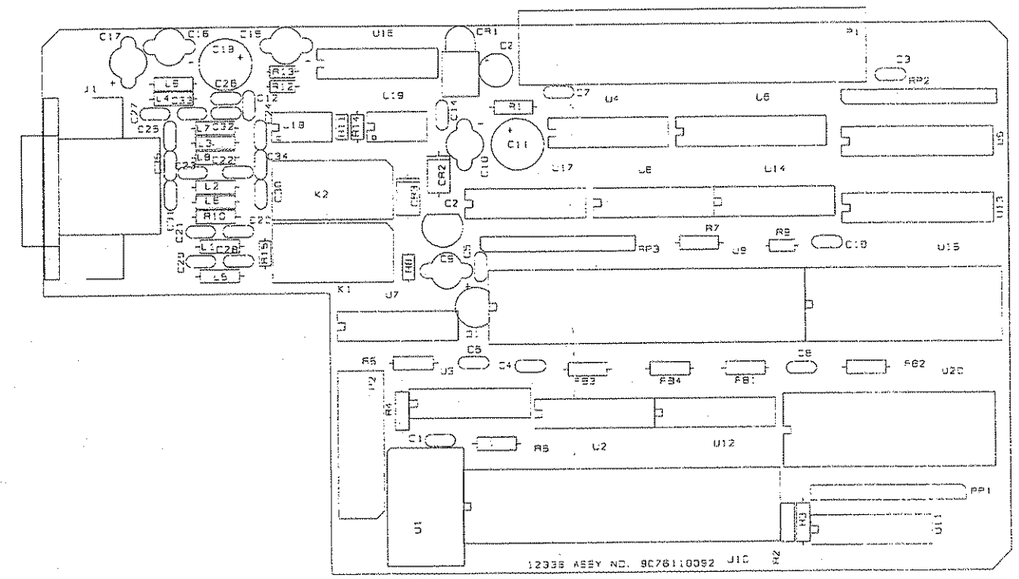

Figure 5.8.16 PC Assembly, I/O Board 1A2A8, page 1/3.

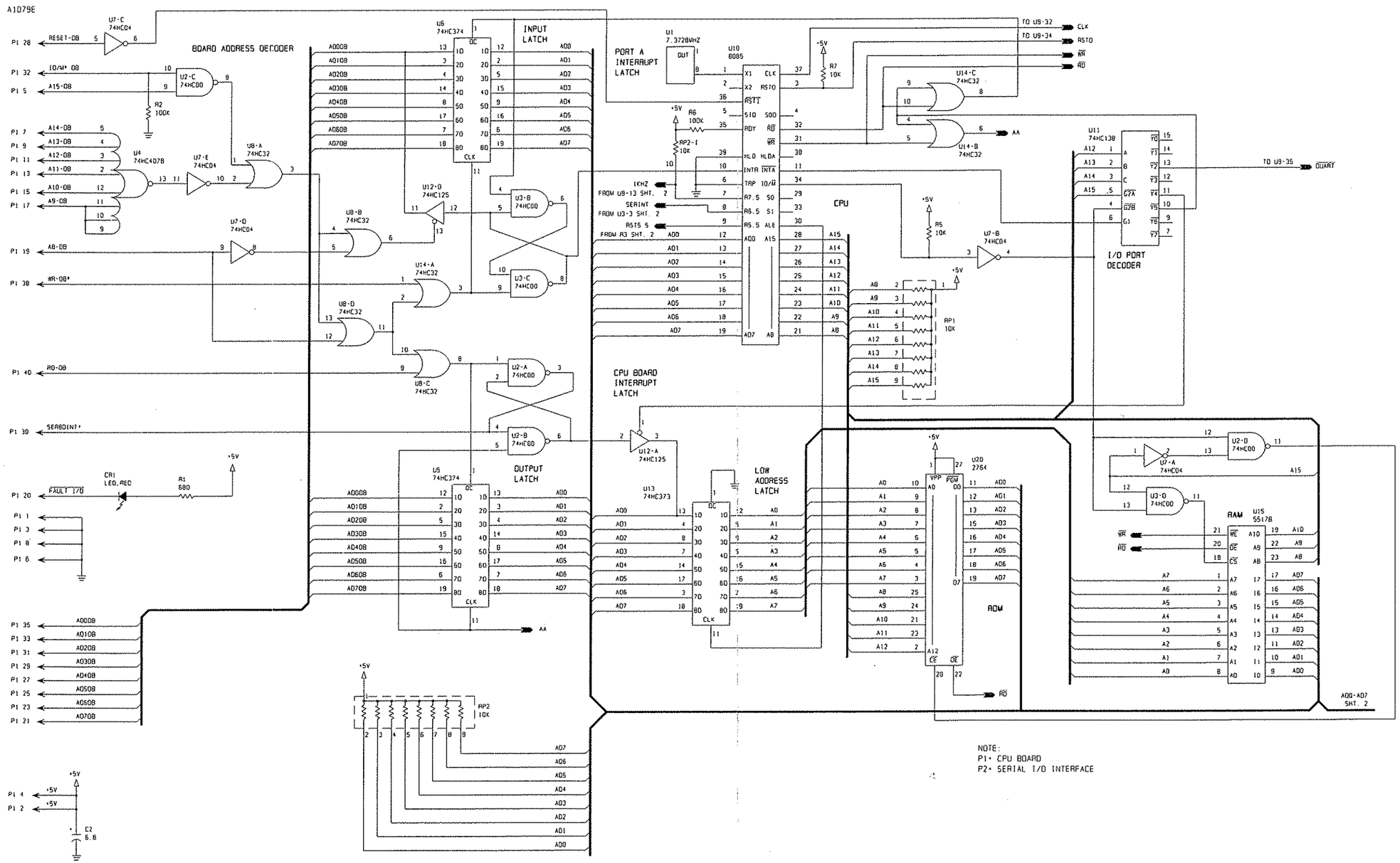

Figure 5.8.16 PC Assembly, I/O Board 1A2A8, page 2/3.

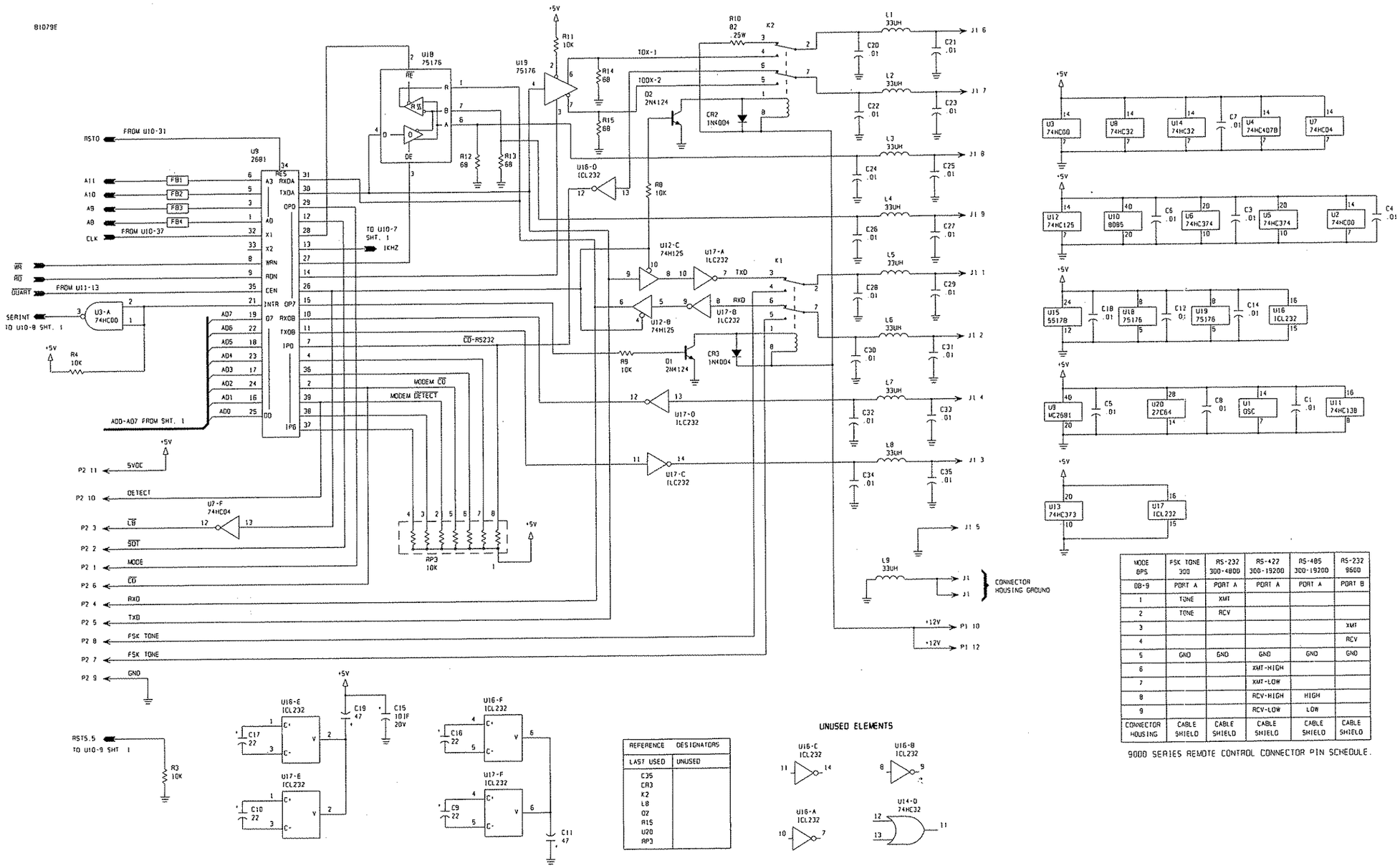

REFERENCE DESIGNATORS	
LAST USED	UNUSED
C35	
CR3	
K2	
L8	
Q2	
R15	
U20	
RP3	

MODE BPS	FSK TONE 300	RS-232 300-4800	RS-422 300-19200	RS-485 300-19200	RS-232 9600
DB-9	PORT A	PORT A	PORT A	PORT A	PORT B
1	TONE	XMT			
2	TONE	RCV			
3					XMT
4					RCV
5	GND	GND	GND	GND	GND
6			XMT-HIGH		
7			XMT-LOW		
8			RCV-HIGH	HIGH	
9			RCV-LOW	LOW	
CONNECTOR HOUSING	CABLE SHIELD	CABLE SHIELD	CABLE SHIELD	CABLE SHIELD	CABLE SHIELD

9000 SERIES REMOTE CONTROL CONNECTOR PIN SCHEDULE.

Figure 5.8.16 PC Assembly, I/O Board 1A2A8, page 3/3.

1159CP

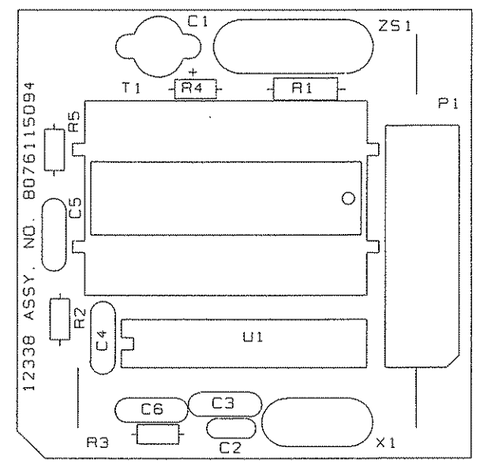

PC ASSY, FSK MODEM 1A2A8A1

	PC ASSY, FSK MODEM 3A2A3A1	8076115094
C1	CAP. 10μF, 20V	1007290005
C2	CAP. 0.001μF, 100V, X7R, 20%	0281630003
C3	CAPACITOR 0.1μF, 50V, X7R	1011180014
C4	CAPACITOR 0.1μF, 50V, X7R	1011180014
C5	CAPACITOR 0.1μF, 50V, X7R	1011180014
C6	CAPACITOR 0.1μF, 50V, X7R	1011180014
P1	CONNECTOR, RIBBON, 14 PIN FEM	1008350001
R1	RESISTOR 604, 1%, 1/8W	0193980002
R2	RESISTOR 5.6K, 5%, 1/8W	1010805622
R3	RESISTOR 10K, 5%, 1/8W	1010801031
R4	RESISTOR 10K, 5%, 1/8W	1010801031
R5	RESISTOR 10K, 5%, 1/8W	1010801031
T1	TRANSFORMER, MODEM	1011340011
U1	IC. DIGITAL MC145443	1011330016
X1	CRYSTAL, 3.579545 MHZ	1006270001
XP1	CONNECTOR,PCB,TRANSITION,14PIN	1011090147
ZS1	VARISTOR, MOV V230LA20A	1010720023
	CABLE, FLAT, 14 COND. 28AWG	1011170001

Figure 5.8.17 PC Assembly, FSK Modem 1A2A8A1, page 1/2.

A1159C

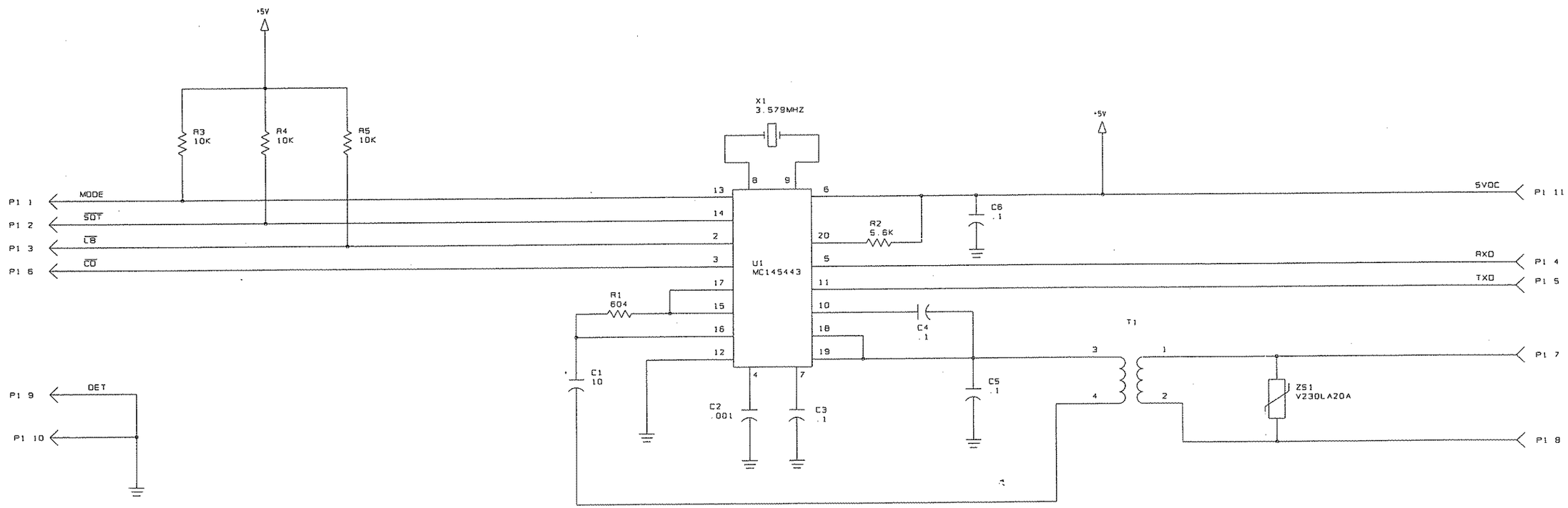

Figure 5.8.17 PC Assembly, FSK Modem 1A2A8A1, page 2/2.

THIS PAGE INTENTIONALLY LEFT BLANK.

FILTER ASSY 1A3

	FILTER ASSY 1A3	**8076050090**
1A3A1	PC ASSY. DETECTOR	8076053099
1A3A2	PC ASSY. BANDS 1-4	8076057094
1A3A3	PC ASSY. BANDS 5-8	8076055091
	ENCLOSURE, FILTER MODULE	8076050502

Figure 5.8.18 Filter Assembly 1A3, page 1/1.

PC ASSY, DETECTOR 1A3A1

	PC ASSY, DETECTOR 1A3A1	8076053099
C1	CAP. 30 PF, 2KV, N750	1008230014
C2	CAP. 100PF 2KV N750	1008250031
C3	CAP. .01µF, 50V, X7R 20%	0281730008
C4	CAP. 30 PF, 2KV, N750	1008230014
C5	CAP. 30 PF, 2KV, N750	1008230014
C6	CAP. 30 PF, 2KV, N750	1008230014
C7	CAP. 30 PF, 2KV, N750	1008230014
C8	CAP. .01µF, 50V, X7R 20%	0281730008
C9	CAP. .01µF, 50V, X7R 20%	0281730008
C10	CAP. .01µF, 50V, X7R 20%	0281730008
C11	CAP. .01µF, 50V, X7R 20%	0281730008
C12	CAPACITOR, 0.1µF, 200V, X7R	1011190001
C13	CAPACITOR, 0.1µF, 200V, X7R	1011190001
C14	CAP. 1µF, 50V, 198D	0280910002
C15	CAP. 56 PF, 2KV, N750	1008240028
C16	CAP. 56 PF, 2KV, N750	1008240028
C17	CAP. 15-60PF, 200V, N1500	0252680006
C18	CAP. .01µF, 50V, X7R 20%	0281730008
C19	CAP. .01µF, 50V, X7R 20%	0281730008
C20	CAP. .01µF, 50V, X7R 20%	0281730008
CP1	CAPACITOR, NTWK, 10 PIN, .01µF	1006540016
CR1	DIODE, SIGNAL, SIL. 1N4454	0405270003
CR2	DIODE, SIGNAL, SIL. 1N4454	0405270003
CR3	DIODE, RECTIFIER 1N4004	0405180004
CR4	DIODE, PIN UM4001CR	0405440006
CR5	DIODE, PIN UM4001C	0405430001
CR6	DIODE, RECTIFIER 1N4004	0405180004
CR7	DIODE, RECTIFIER 1N4004	0405180004
CR8	DIODE, RECTIFIER 1N4004	0405180004
CR9	DIODE, SIGNAL, SIL. 1N4454	0405270003
CR10	DIODE, LED, RED	1004350023
DSP1	DIODE, LED, RED, BAR GRAPH	1010690019
J1	CONNECTOR, RF, JCM	0753600005
J2	CONNECTOR, RF, JCM	0753600005
J3	CONNECTOR, RF, SNAP-ON	1000170012
J5	CONNECTOR, HEADER, 26 PIN MALE	1011200261
K1	RELAY, SPST, 24VDC, PC MOUNT	1010310038
K2	RELAY, SPST, 24VDC, PC MOUNT	1010310038
L1	INDUCTOR, AIR WOUND, 303 NH	8076053501
L2	INDUCTOR, AIR WOUND, 303 NH	8076053501
P1A	CONNECTOR, RIBBON, 10 PIN FEM	1008070017
P1B	CONNECTOR, RIBBON, 10 PIN FEM	1008070017
P2	CONNECTOR, RIBBON, 10 PIN FEM	1008070017
Q1	TRANSISTOR, NPN, SI. 2N4124	0448010003
Q2	TRANSISTOR, NPN, SI. 2N4124	0448010003
R1	RESISTOR, 51, 5%, 1/4W	0197020003
R2	RESISTOR 10K, 10%, 1/4W	0170410005
R3	RESISTOR, 51, 5%, 1/4W	0197020003
R4	RESISTOR 10K, 10%, 1/4W	0170410005
R5	RESISTOR 4.7K, 5%, 1/4W	0170770001
R6	RESISTOR 10K, 10%, 1/4W	0170410005
R7	RESISTOR 4.7K, 5%, 1/4W	0170770001
R8	RESISTOR 10K, 10%, 1/4W	0170410005
R9	RESISTOR 12K, 10%, 1/4W	0183180003
R10	RESISTOR 4.7K, 10%, 2W	0164130004
R11	RESISTOR 1K, 10%, 1/4W	0171560001
R12	RESISTOR 180, 10%, 1/4W	0175220000
RP1	RES NTWK 10 PIN SIP 680 COM	1010640003
T1	TRANSFORMER, 20:1, DETECTOR	8076053706
T2	TRANSFORMER, 20:1, DETECTOR	8076053706
	CABLE, FLAT, 20 COND. 28AWG	1008080004
	CABLE, RIBBON, 10 CONDUCTOR	1008340014
	CONNECTOR,PCB,TRANSITION,10PIN	1011090104
	CONNECTOR,PCB,TRANSITION,20PIN	1011090201
	KEY, POLARIZING	1008070033

1053CP

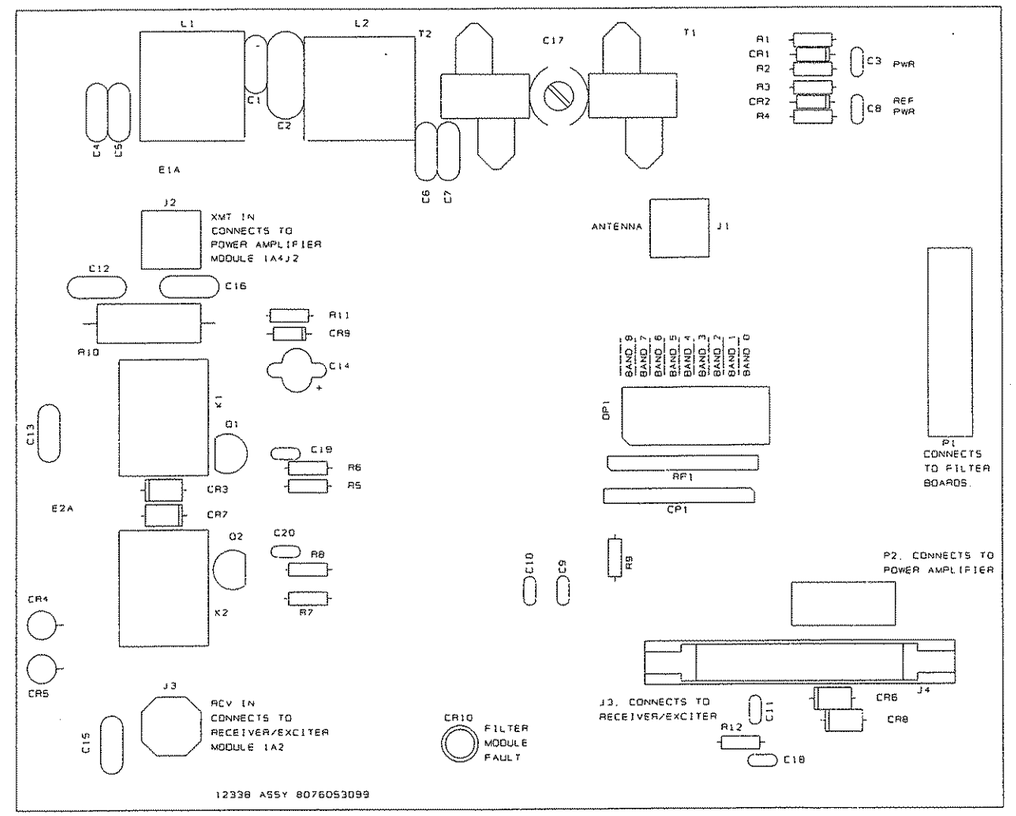

Figure 5.8.19 PC Assembly, Detector 1A3A1, page 1/2.

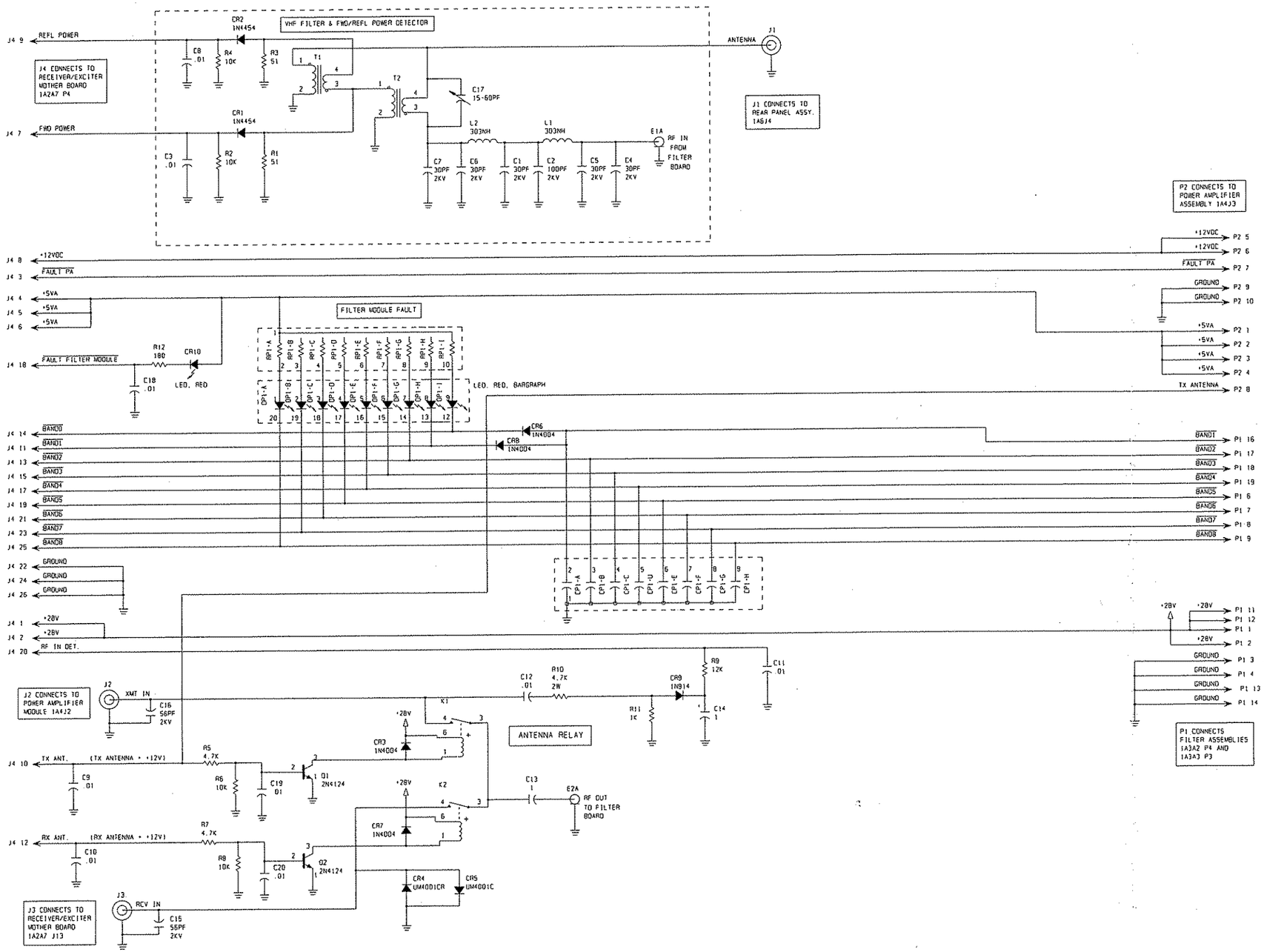

Figure 5.8.19 PC Assembly, Detector 1A3A1, page 2/2.

PC ASSY, BANDS 1-4 1A3A2

	PC ASSY, BANDS 1-4 1A3A2	8076057094
C57	CAP. 82 PF 2KV N750	1008270024
C58	CAP. 82 PF 2KV N750	1008270024
C59	CAP. 91 PF, 2KV N750	1008250023
C60	CAP. 300PF 2KV N750	1008470015
C61	CAP. 27 PF, 2KV, N750	1008230006
C62	CAP. 700PF, 500V, DM19, 5%	0249410001
C63	CAP. 120PF 2KV N750	1008260011
C64	CAP. 390PF, 500V, DM19, 2%	0282640002
C65	CAP. 33 PF, 2KV, N750	1008230022
C66	CAP. 700PF, 500V, DM19, 5%	0249410001
C67	CAP. 56 PF, 2KV, N750	1008240028
C68	CAP. 33 PF, 2KV, N750	1008230022
C69	CAP. 300PF 2KV N750	1008470015
C70	CAP. 130PF 2KV N750	1008260029
C71	CAP. 68 PF, 2KV N750	1008250007
C72	CAP. 180PF 2KV N750	1008270008
C73	CAP. 27 PF, 2KV, N750	1008230006
C74	CAP. 560PF, 500V, DM19, 2%	0281060002
C75	CAP. 800PF, 500V, DM19, 5%	0249530007
C76	CAP. 300PF 2KV N750	1008470015
C78	CAP. 430PF, 500V, DM19, 5%	0254900003
C79	CAP. 330PF 2KV N750	1008280038
C80	CAP. 800PF, 500V, DM19, 5%	0249530007
C81	CAP. 300PF 2KV N750	1008470015
C82	CAP. 91 PF, 2KV N750	1008250023
C83	CAP. 43PF 2KV N750	1008470023
C84	CAP. 330PF 2KV N750	1008280038
C85	CAP. 360PF, 500V, DM19, 2%	0282650008
C86	CAP. 150PF 2KV N750	1008260037
C87	CAP. 180PF 2KV N750	1008270008
C88	CAP. 430PF, 500V, DM19, 5%	0254900003
C89	CAP. 300PF 2KV N750	1008470015
C90	CAP. 910PF, 500V, DM19, 2%	0281450005
C91	CAP. 620PF, 500V, DM19, 5%	0299150003
C92	CAP. 430PF, 500V, DM19, 5%	0254900003
C93	CAP. 620PF, 500V, DM19, 5%	0299150003
C94	CAP. 910PF, 500V, DM19, 2%	0281450005
C95	CAP. 620PF, 500V, DM19, 5%	0299150003
C96	CAP. 130PF 2KV N750	1008260029
C97	CAP. 50 PF, 2KV, N750	1008240010
C98	CAP. 330PF 2KV N750	1008280038
C99	CAP. 600PF, 500V, DM19, 5%	0241850002
C100	CAP. 27 PF, 2KV, N750	1008230006
C101	CAP. 470PF, 500V, DM19, 5%	0255050003
C102	CAP. 390PF, 500V, DM19, 2%	0282640002
C103	CAP. 750PF, 500V, DM19, 2%	0280990006
C104	CAP. 270PF 2KV N750	1008280020
C105	CAP. 2000PF, 500V, DM19, 5%	0298500001
C106	CAP. 820PF, 500V, DM19, 2%	0281280002
C107	CAP. 750PF, 500V, DM19, 2%	0280990006
C108	CAP. 620PF, 500V, DM19, 5%	0299150003
C109	CAP. 1600PF, 500V, DM19, 2%	0281220000
C110	CAP. 200PF 2KV N750	1008270016
C111	CAP. 75 PF, 2KV N750	1008250015
C112	CAP. 820PF, 500V, DM19, 2%	0281280002
C113	CAP. 510PF, 500V, DM19, 2%	0282630007
CR5	DIODE, RECTIFIER 1N4004	0405180004
CR6	DIODE, RECTIFIER 1N4004	0405180004
CR7	DIODE, RECTIFIER 1N4004	0405180004
CR8	DIODE, RECTIFIER 1N4004	0405180004
CR15	DIODE, RECTIFIER 1N4004	0405180004
CR16	DIODE, RECTIFIER 1N4004	0405180004
CR17	DIODE, RECTIFIER 1N4004	0405180004
CR18	DIODE, RECTIFIER 1N4004	0405180004
K5	RELAY, SPST, 24VDC, PC MOUNT	1010310038
K6	RELAY, SPST, 24VDC, PC MOUNT	1010310038
K7	RELAY, SPST, 24VDC, PC MOUNT	1010310038
K8	RELAY, SPST, 24VDC, PC MOUNT	1010310038
K13	RELAY, SPST, 24VDC, PC MOUNT	1010310038
K14	RELAY, SPST, 24VDC, PC MOUNT	1010310038
K15	RELAY, SPST, 24VDC, PC MOUNT	1010310038
K16	RELAY, SPST, 24VDC, PC MOUNT	1010310038
L13	INDUCTOR, AIR WOUND, 634 NH	8076057507
L14	INDUCTOR, AIR WOUND, 729NH	8076057604
L15	INDUCTOR, TOROID, 1.43 µH	8076057701
L16	INDUCTOR, TOROID, 0.95 µH	8076057809
L17	INDUCTOR, TOROID, 1.18 µH	8076057906
L18	INDUCTOR, TOROID, 2.00 µH	8076058007
L19	INDUCTOR, TOROID, 1.47 µH	8076058104
L20	INDUCTOR, TOROID, 1.70 µH	8076058201
L21	INDUCTOR, TOROID, 2.74 µH	8076058309
L22	INDUCTOR, TOROID, 2.22 µH	8076058406
L23	INDUCTOR, TOROID, 2.52 µH	8076058503
L24	INDUCTOR, TOROID, 4.30 µH	8076058601
P4	CONNECTOR, HEADER, 10 PIN MALE	1011200104
	KEY, POLARIZING	1008070033

1055BP

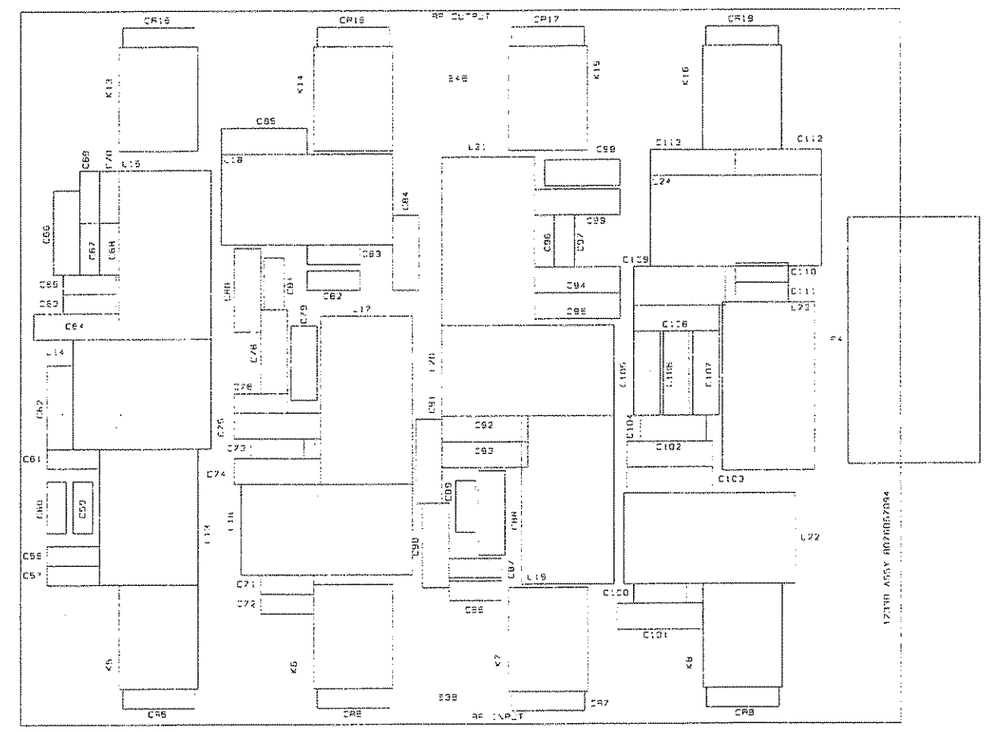

Figure 5.8.20 PC Assembly, Bands 1-4 1A3A2, page 1/2.

A1055B

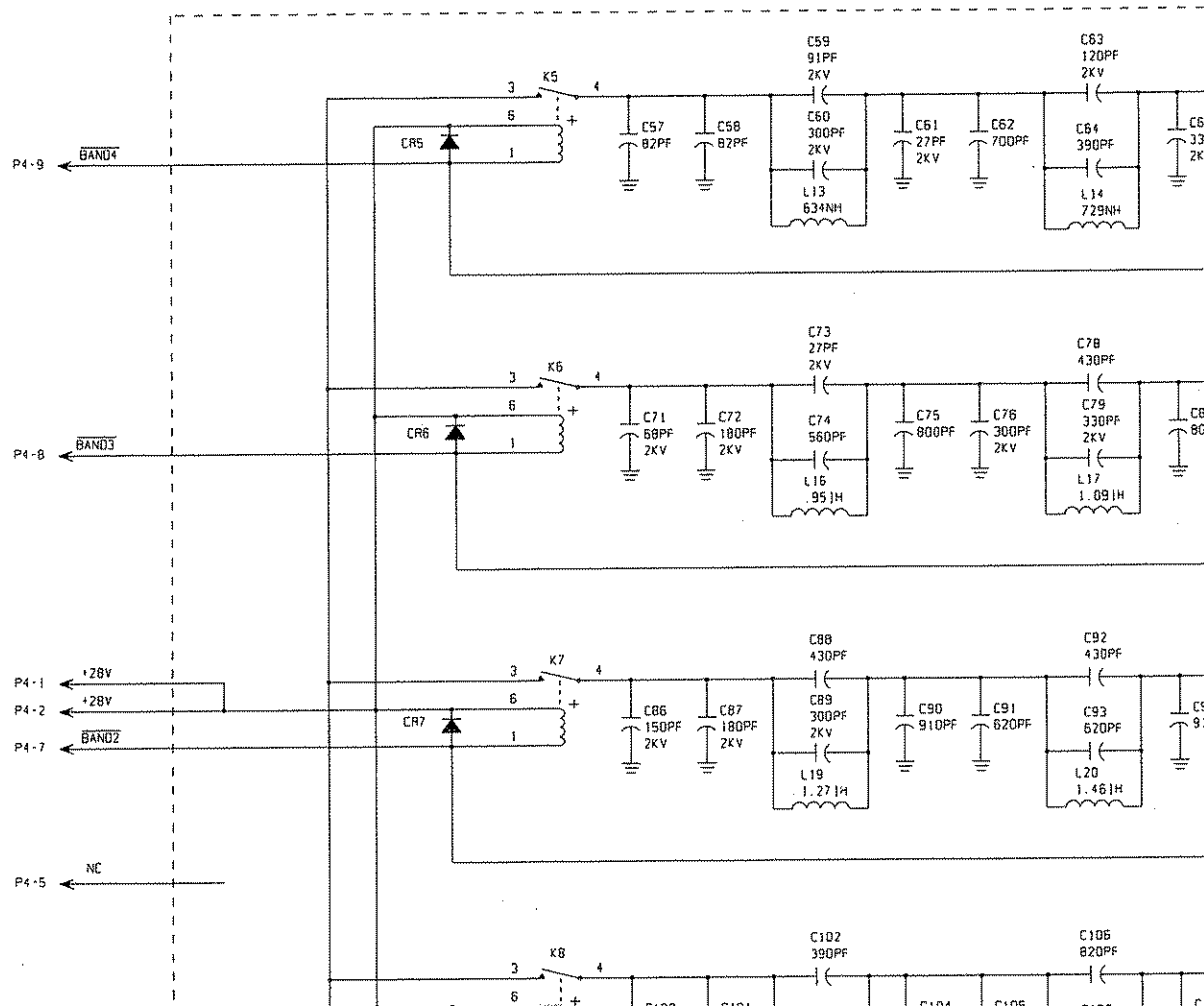
P4-9
BAND4
K5
CR5
C57 82PF
C58 82PF
C59 91PF 2KV
C60 300PF 2KV
L13 634NH
C61 27PF 2KV
C62 700PF
C63 120PF 2KV
C64 390PF
L14 729NH
P4-8
BAND3
K6
CR6
C71 68PF 2KV
C72 180PF 2KV
C73 27PF 2KV
C74 560PF
L16 .95µH
C75 800PF
C76 300PF 2KV
C78 430PF
C79 330PF 2KV
L17 1.09µH
P4-1
P4-2
P4-7
+28V
+28V
BAND2
K7
CR7
C86 150PF 2KV
C87 180PF 2KV
C88 430PF
C89 300PF 2KV
L19 1.27µH
C90 910PF
C91 620PF
C92 430PF
C93 620PF
L20 1.46µH
P4-5
NC
K8
C102 390PF
C106 820PF

CTIFIER 1N4004	0405180004
CTIFIER 1N4004	0405180004
CTIFIER 1N4004	0405180004
ST, 24VDC, PC MOUNT	1010310038
ST, 24VDC, PC MOUNT	1010310038
ST, 24VDC, PC MOUNT	1010310038
ST, 24VDC, PC MOUNT	1010310038
ST, 24VDC, PC MOUNT	1010310038
ST, 24VDC, PC MOUNT	1010310038
ST, 24VDC, PC MOUNT	1010310038
ST, 24VDC, PC MOUNT	1010310038
R, AIR WOUND, 102 NH	8076055504
R, AIR WOUND, 147 NH	8076055601
R, AIR WOUND, 221 NH	8076055709
R, AIR WOUND, 153 NH	8076055806
R, AIR WOUND, 221 NH	8076055709
R, AIR WOUND, 384 NH	8076055903
R, AIR WOUND, 282 NH	8076056004
R, AIR WOUND, 324 NH	8076056101
R, AIR WOUND, 577 NH	8076056209
R, AIR WOUND, 423 NH	8076056306
R, AIR WOUND, 486 NH	8076056403
R, AIR WOUND, 866 NH	8076056501
OR, HEADER, 10 PIN MALE	1011200104
RIZING	1003070033

1054BP

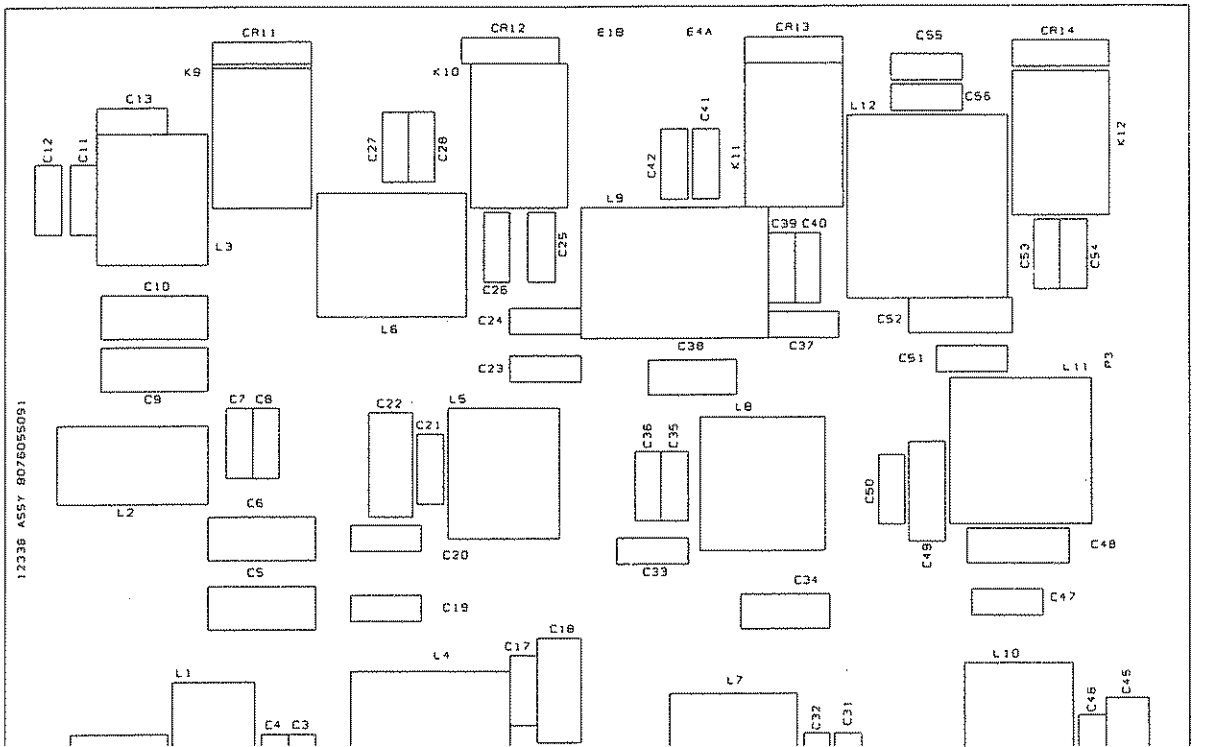

A1054B

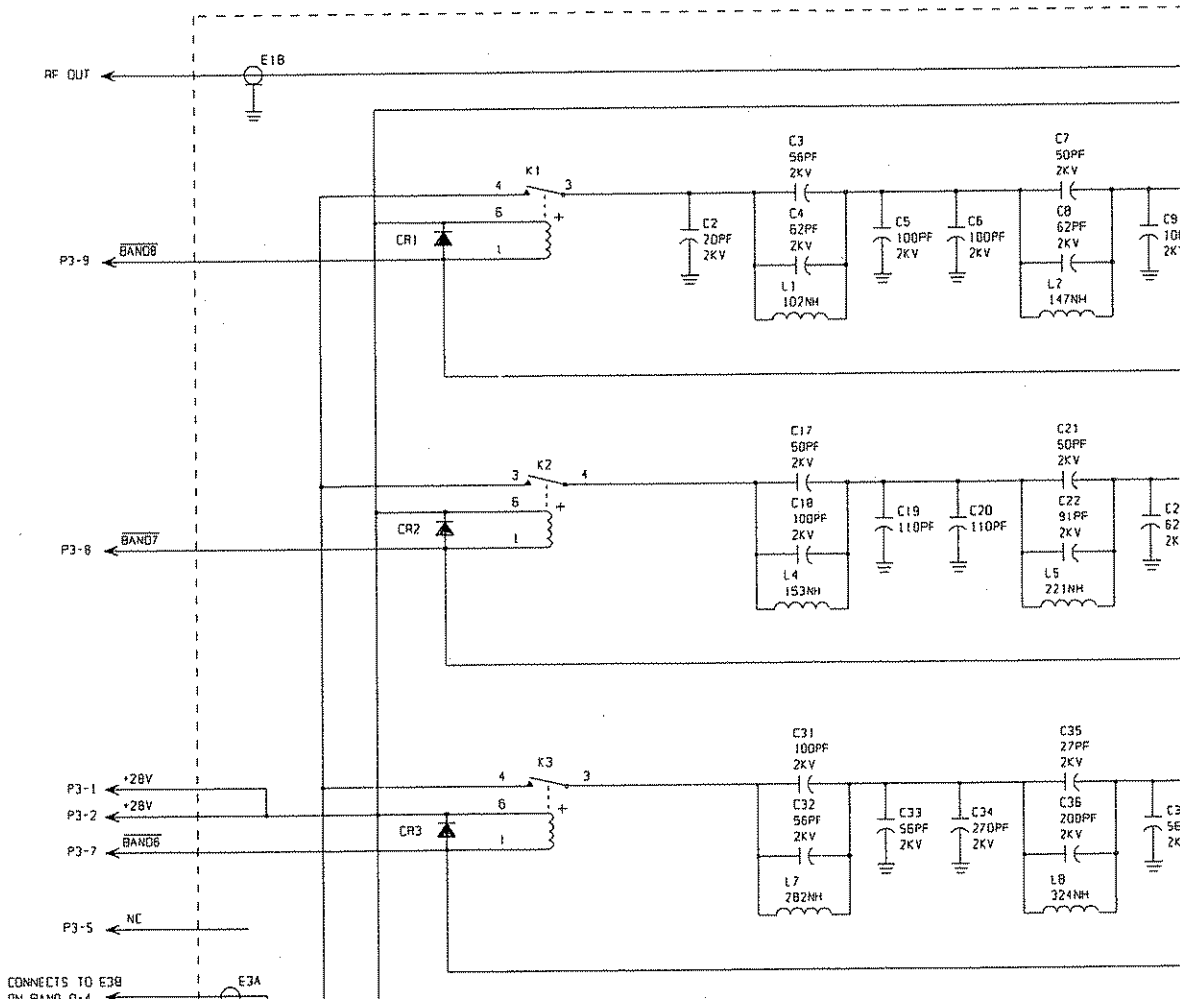
RF OUT
E1B
P3-9
BAND8
P3-8
BAND7
P3-1
+28V
P3-2
+28V
P3-7
BAND6
P3-5
NC
CONNECTS TO E39
ON BAND 9-4
E3A
K1
K2
K3
CR1
CR2
CR3
C2
20PF
2KV
C3
56PF
2KV
C4
62PF
2KV
L1
102NH
C5
100PF
2KV
C6
100PF
2KV
C7
50PF
2KV
C8
62PF
2KV
L2
147NH
C17
50PF
2KV
C18
100PF
2KV
L4
153NH
C19
110PF
C20
110PF
C21
50PF
2KV
C22
91PF
2KV
L5
221NH
C31
100PF
2KV
C32
56PF
2KV
L7
282NH
C33
56PF
2KV
C34
270PF
2KV
C35
27PF
2KV
C36
200PF
2KV
L8
324NH

N,SI	MRF485	1010240030
N,SI	MRF485	1010240030
N, SI.		0448170001
N, SI.		0448170001
N, SI.		0448170001
N, SI.		0448170001
P, SI	MJE370	1010140035
N, SI	2N4921	0448040000
N,SI	MPSA42	1010250035
N,SI	MJE13002	1010260031
10%, 1/2W		0187080003
10%, 1/2W		0185380000
10%, 1/2W		0185380000
10%, 1/2W		0187080003
10%, 1/2W		1010200038
10%, 1/2W		1010200038
0%, 1W		1010210033
0%, 1W		1010220039
0%, 1W		1010220039
0%, 1W		1010210033
0%, 1W		1010210033
0%, 1W		1010220039
0%, 1W		1010220039
0%, 1W		1010210033
0%, 1W		1010230034
0%, 1W		1010230034
0%, 1W		1010230034
0%, 1W		1010230034
LINE, 18, 20W		1010150031
LINE, 18, 20W		1010150031
5%, 1/4W		0171180003
2W, PC MOUNT		0346350000
0%, 1W		0164990003
10%, 1/2W		1010390031
10%, 1/4W		0171560001
10%, 1/4W		0175720002
5%, 1/4W		0174810008
2W, PC MOUNT		0346350000

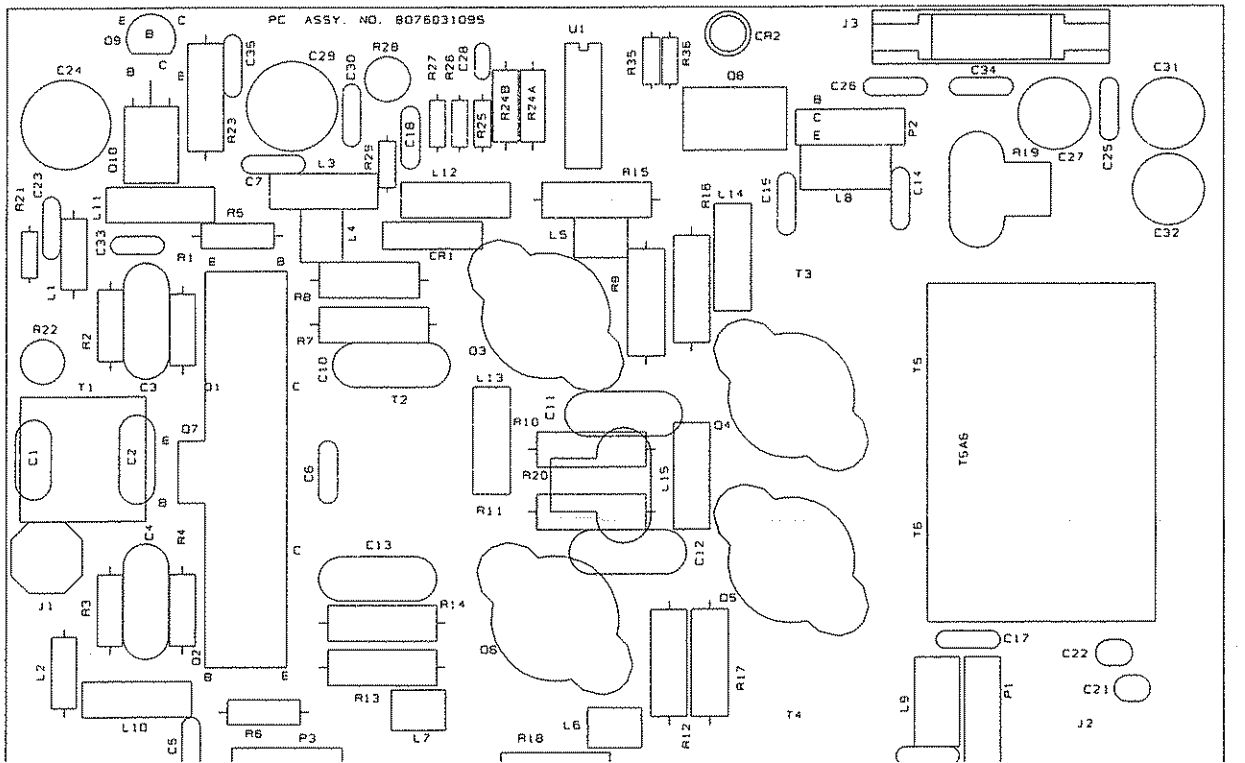

A1042C

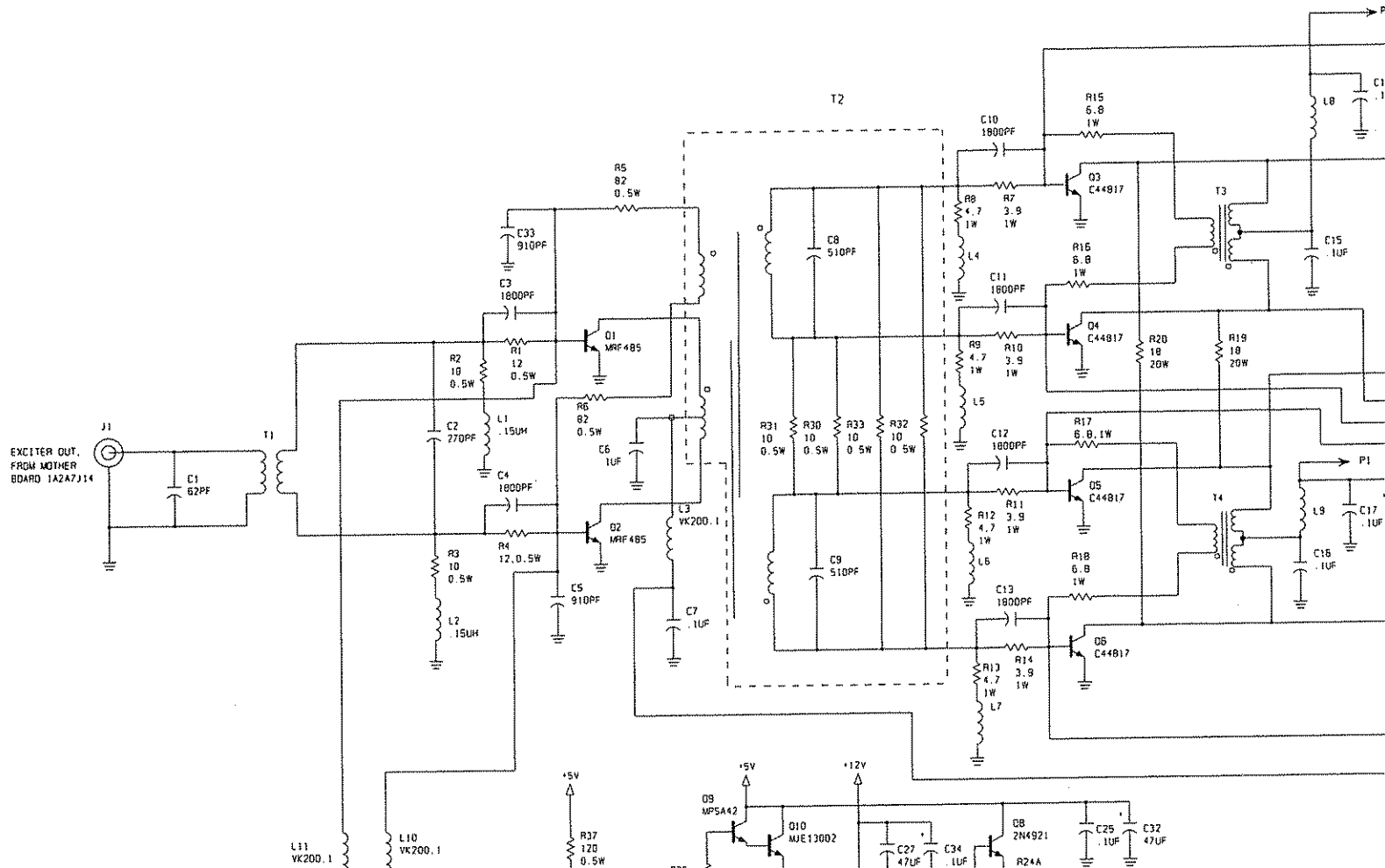
EXCITER OUT, FROM MOTHER BOARD 1A2A7J14
J1
C1 62PF
T1
C2 270PF
L1 .15UH
C3 1800PF
C4 1800PF
R1 12 0.5W
R2 10 0.5W
R3 10 0.5W
R4 12,0.5W
L2 .15UH
Q1 MRF485
Q2 MRF485
R5 82 0.5W
R6 82 0.5W
C33 910PF
C5 910PF
C6 .1UF
C7 .1UF
L3 VK200.1
T2
C8 510PF
C9 510PF
R31 10 0.5W
R30 10 0.5W
R33 10 0.5W
R32 10 0.5W
C10 1800PF
C11 1800PF
C12 1800PF
C13 1800PF
R8 4.7 1W
R7 3.9 1W
R9 4.7 1W
R10 3.9 1W
R12 4.7 1W
R11 3.9 1W
R13 4.7 1W
R14 3.9 1W
L4
L5
L6
L7
R15 6.8 1W
R16 6.8 1W
R17 6.8 1W
R18 6.8 1W
Q3 C44817
Q4 C44817
Q5 C44817
Q6 C44817
R20 10 20W
R19 10 20W
T3
T4
L8
L9
C15 .1UF
C16 .1UF
C17 .1UF
P1
L11 VK200.1
L10 VK200.1
+5V
R37 120 0.5W
Q9 MPSA42
Q10 MJE13002
+12V
C27 47UF
C34 .1UF
Q8 2N4921
R24A
C25 .1UF
C32 47UF

THIS PAGE INTENTIONALLY LEFT BLANK.

CTOR, HEADER, 26 PIN MALE	1011200261
CTOR, HEADER 14 PIN MALE	1011200147
SPST, 24V	1008590029
SPDT, 24V, REED	1003400001
OR, CHOKE, 47µH	1008990019
OR, CHOKE 40µH, 20%	1010970003
OR, CHOKE 40µH, 20%	1010970003
OR, POWER, 180µH	1008690015
OR, CHOKE 40µH, 20%	1010970003
OR, CHOKE 40µH, 20%	1010970003
OR, POWER, 180µH	1008690015
OR, CHOKE 40µH, 20%	1010970003
OR, CHOKE 40µH, 20%	1010970003
OR, POWER, 180µH	1008690015
TRASZORB LDTS30A	1010980009
SCR C106A2	0447070002
STOR, NPN, SI. 2N4124	0448010003
SCR C106A2	0447070002
STOR, PNP, SI. 2N4249	0446780006
SCR C106A2	0447070002
STOR, P-CH FET MTP20P06	1010960008
STOR, NPN, S1. 2N3700	1008500038
OR 3, 5% 3W	1004600003
OR 36.5K, 1%, 1/8W	1004050011
OR 5.6K, 10%, 1/4W	0183060008
OR 1K, 10%, 1/4W	0171560001
OR 10K, 10%, 1/4W	0170410005
OR 1K, 10%, 1/4W	0171560001
OR 1.2, 10%, 2W	0186290004
OR 301, 1%, 1/8W	0194150003
OR 1.8K, 10%, 1/4W	0178190004
OR 5.6K, 10%, 1/4W	0183060008
OR 1K, 10%, 1/4W	0171560001
OR 1.2, 10%, 2W	0186290004
OR 1.8K, 10%, 1/4W	0178190004
OR 3.3K, 10%, 1/4W	0170890007
OR 470, 5%, 1/4W	0184110009
OR 820, 10%, 1/2W	0175600007
OR 1, 5%, 10W	0169680002
OR 150, 5%, 3W	0160110009
OR 301, 1%, 1/8W	0194150003

1117BP

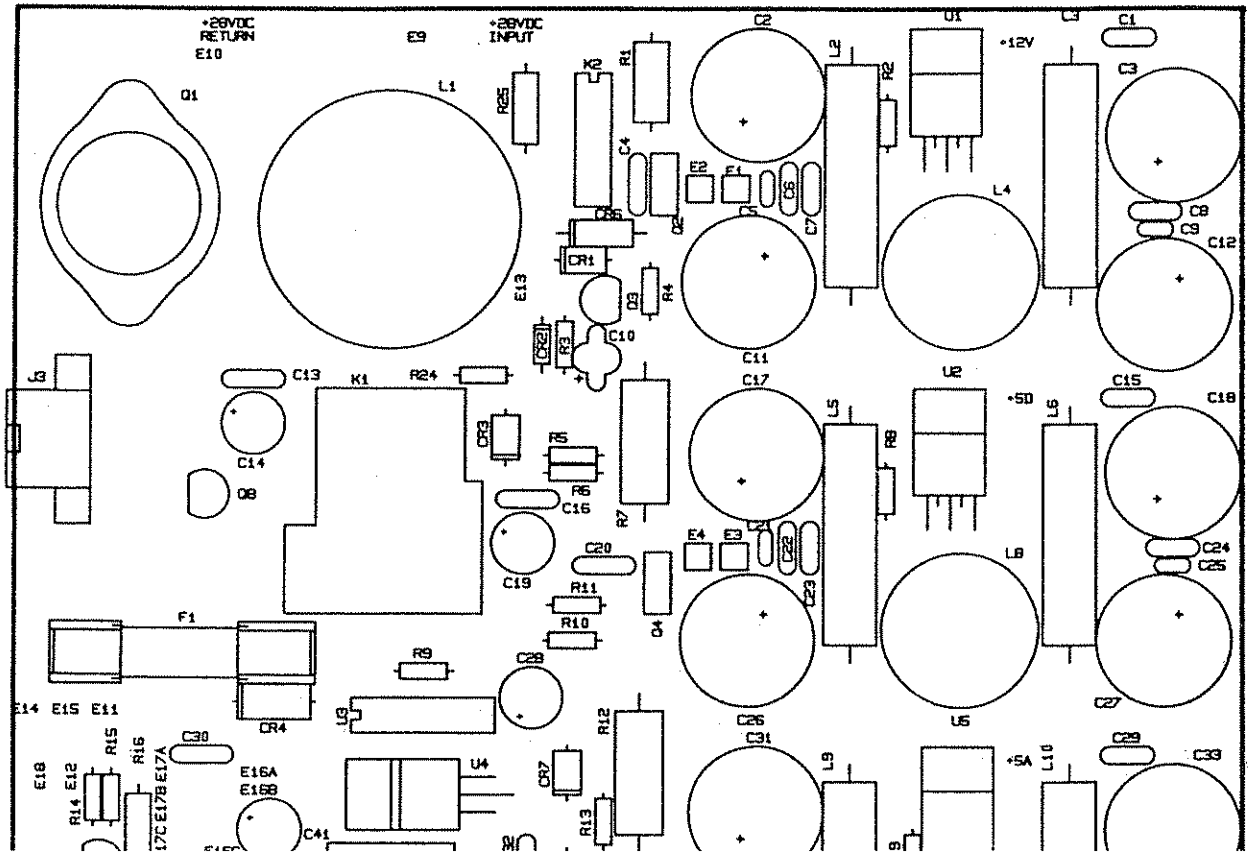

A1117B

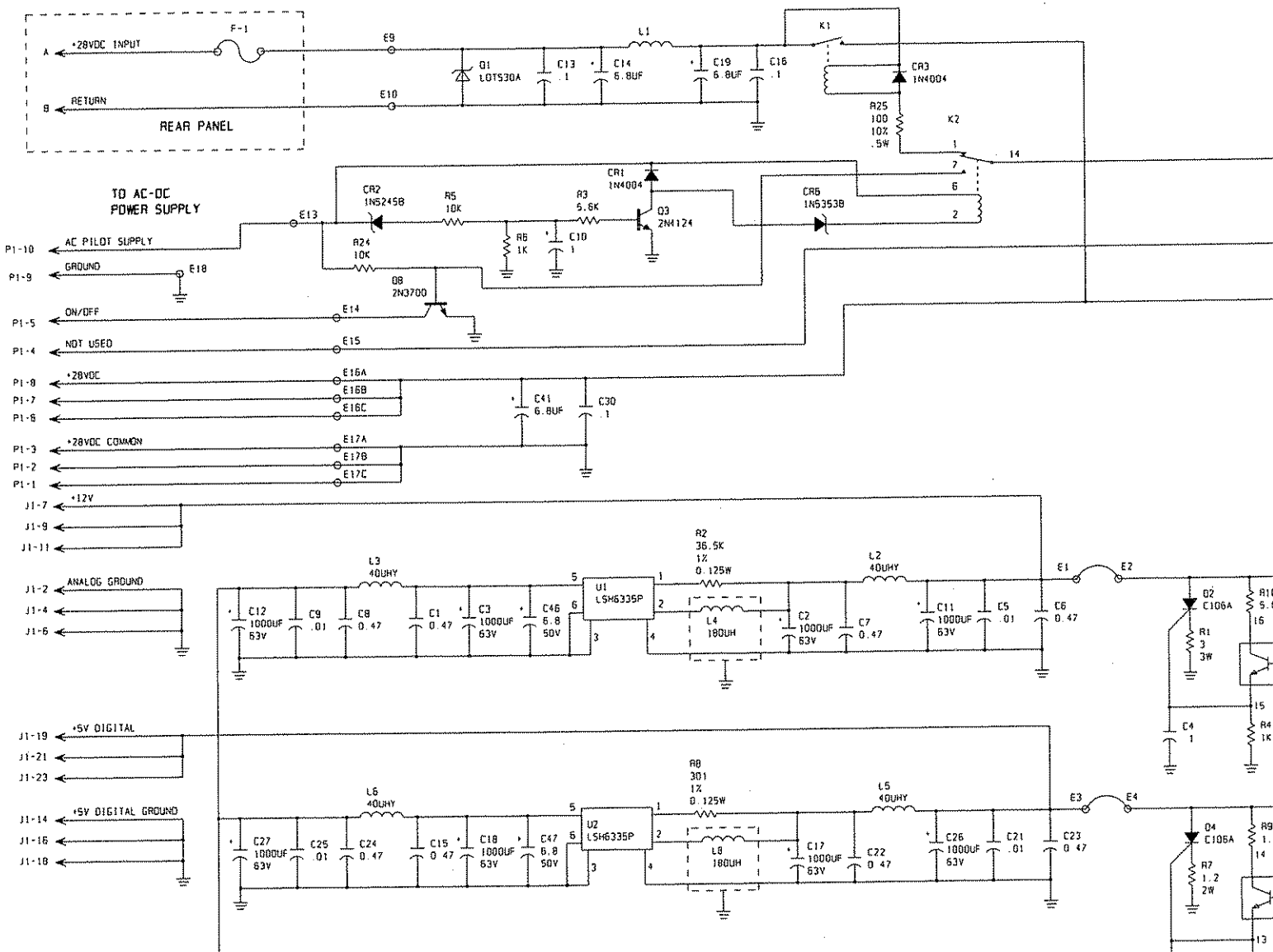
+28VDC INPUT
RETURN
REAR PANEL
F-1
E9
E10
Q1 LOT530A
C13 .1
C14 6.8UF
L1
C19 6.8UF
C16 .1
K1
CR3 1N4004
R25 100 10% .5W
K2
TO AC-DC POWER SUPPLY
E13
CR2 1N5245B
R5 10K
R3 5.6K
CR1 1N4004
Q3 2N4124
CR6 1N5353B
R6 1K
C10 1
R24 10K
Q8 2N3700
P1-10 AC PILOT SUPPLY
P1-9 GROUND
E18
P1-5 ON/OFF
E14
P1-4 NOT USED
E15
P1-8 +28VDC
P1-7
P1-6
E16A
E16B
E16C
C41 6.8UF
C30 .1
P1-3 +28VDC COMMON
P1-2
P1-1
E17A
E17B
E17C
J1-7 +12V
J1-9
J1-11
J1-2 ANALOG GROUND
J1-4
J1-6
L3 40UHY
U1 LSH6335P
R2 36.5K 1% 0.125W
L2 40UHY
C12 1000UF 63V
C9 .01
C8 0.47
C1 0.47
C3 1000UF 63V
C46 6.8 50V
L4 180UH
C2 1000UF 63V
C7 0.47
C11 1000UF 63V
C5 .01
C6 0.47
E1
E2
D2 C106A
R1 3 3W
C4 1
J1-19 +5V DIGITAL
J1-21
J1-23
J1-14 +5V DIGITAL GROUND
J1-16
J1-18
L6 40UHY
U2 LSH6335P
R8 301 1% 0.125W
L5 40UHY
C27 1000UF 63V
C25 .01
C24 0.47
C15 0.47
C18 1000UF 63V
C47 6.8 50V
L8 180UH
C17 1000UF 63V
C22 0.47
C26 1000UF 63V
C21 .01
C23 0.47
E3
E4
D4 C106A
R7 1.2 2W

SISTOR, 26.1K, 1%, 1/8W	1011280001
SISTOR 10K, 1%, 1/8W	1003050026
SISTOR 390, 10%, 1/4W	0178330001
SISTOR 2.7M, 5%, 1/4W	1004900007
SISTOR 10K, 1%, 1/8W	1003050026
SISTOR 270, 10%, 1/4W	0178450006
SISTOR 270, 10%, 1/4W	0178450006
SISTOR 10K, 10%, 1/4W	0170410005
SISTOR 10K, 10%, 1/4W	0170410005
SISTOR 180, 10%, 1/4W	0175220000
SISTOR 10K, 10%, 1/4W	0170410005
SISTOR 390, 10%, 1/4W	0178330001
S NTWK 8 PIN SIP 10K COM	1005200009
DIGITAL ULN2003A	1005630038
DIGITAL ICL7665S	1010940007
DIGITAL ICL7665S	1010940007
DIGITAL ICL7665S	1010940007
DIGITAL 74HC74	1008000019
DIGITAL 74HC74	1008000019
DIGITAL 74HC14	1006490027
DIGITAL ICL7665S	1010940007
DIGITAL 74HC08	1006490019
DIGITAL 74HC11	1010950002
DIGITAL UDN5703A	1011030004
NNECTOR,PCB,TRANSITION,14PIN	1011090147
BLE, FLAT, 14 COND. 28AWG	1011170001

1118AP

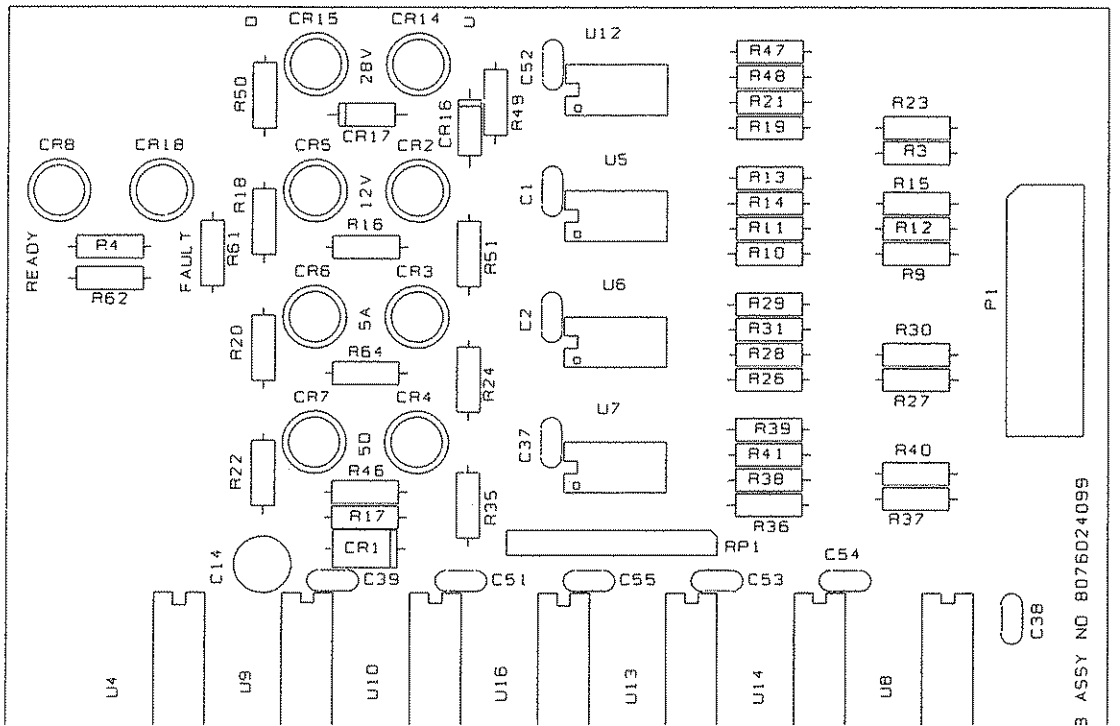

A1118B

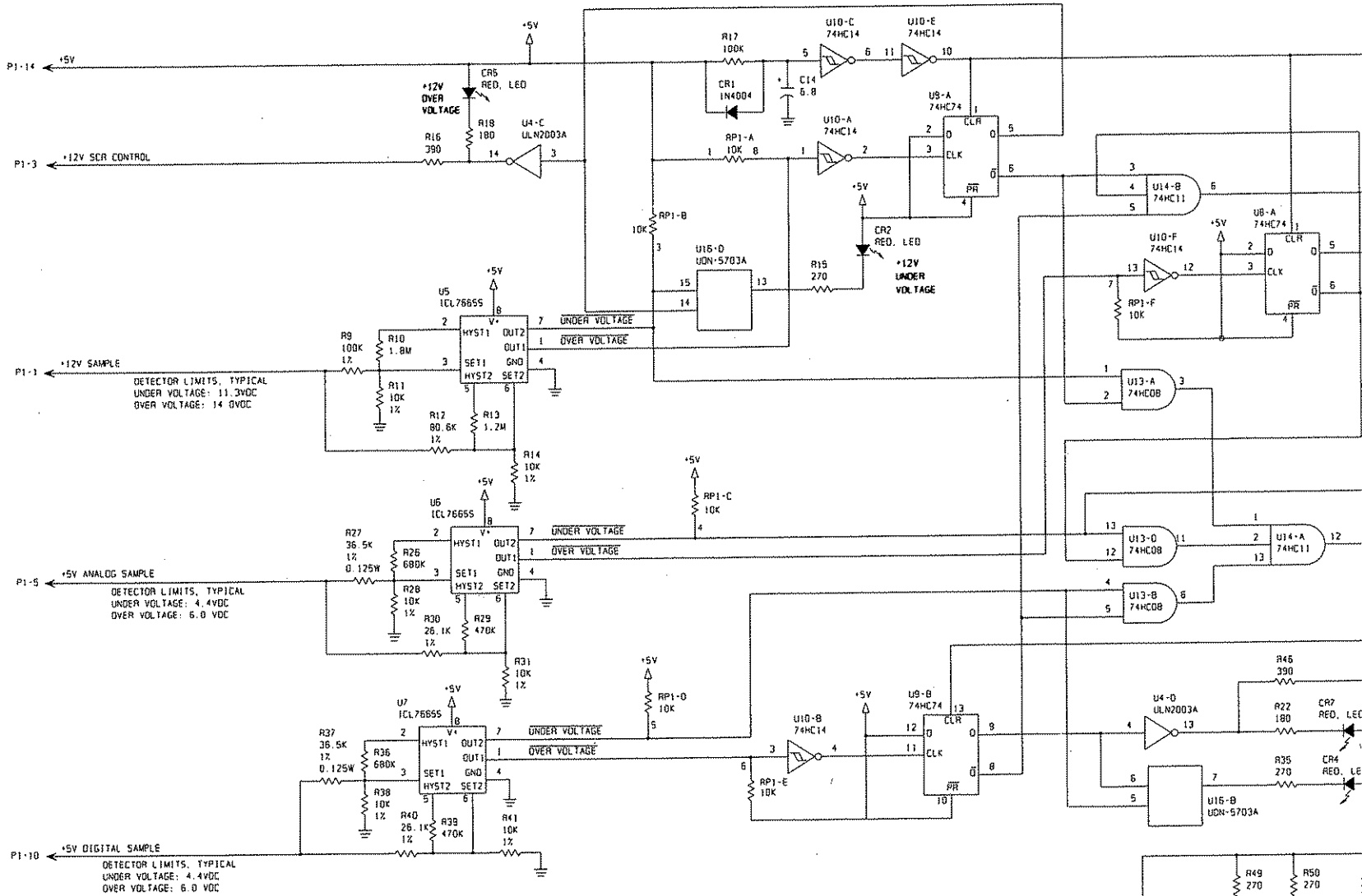
P1-14
+5V
P1-3
+12V SCR CONTROL
CR5
RED. LED
+12V
OVER
VOLTAGE
R18
180
R16
390
U4-C
ULN2003A
R17
100K
CR1
1N4004
C14
6.8
U10-C
74HC14
U10-E
74HC14
U10-A
74HC14
RP1-A
10K
U8-A
74HC74
CLR
CLK
PR
RP1-B
10K
U16-D
UDN-5703A
R15
270
CR2
RED. LED
+12V
UNDER
VOLTAGE
U14-B
74HC11
U10-F
74HC14
RP1-F
10K
U8-A
74HC74
U5
ICL7665S
V+
HYST1
OUT2
OUT1
SET1
GND
HYST2
SET2
UNDER VOLTAGE
OVER VOLTAGE
P1-1
+12V SAMPLE
DETECTOR LIMITS, TYPICAL
UNDER VOLTAGE: 11.3VDC
OVER VOLTAGE: 14 0VDC
R9
100K
1%
R10
1.8M
R11
10K
1%
R12
80.6K
1%
R13
1.2M
R14
10K
1%
U13-A
74HC08
U6
ICL7665S
RP1-C
10K
R27
36.5K
1%
0.125W
R26
680K
R28
10K
1%
R30
26.1K
1%
R29
470K
R31
10K
1%
P1-5
+5V ANALOG SAMPLE
DETECTOR LIMITS, TYPICAL
UNDER VOLTAGE: 4.4VDC
OVER VOLTAGE: 6.0 VDC
U13-D
74HC08
U14-A
74HC11
U13-B
74HC08
U7
ICL7665S
RP1-D
10K
R37
36.5K
1%
0.125W
R36
680K
R38
10K
1%
R40
26.1K
1%
R39
470K
R41
10K
1%
U10-B
74HC14
RP1-E
10K
U9-B
74HC74
U4-D
ULN2003A
R46
390
R22
180
CR7
RED. LED
R35
270
CR4
RED. LED
U16-B
UDN-5703A
P1-10
+5V DIGITAL SAMPLE
DETECTOR LIMITS, TYPICAL
UNDER VOLTAGE: 4.4VDC
OVER VOLTAGE: 6.0 VDC
R49
270
R50
270

POWER SUPPLY ASSEMBLY, 115/230 VAC 1A5A2

	PWR SUPPLY ASSY, 115/230 VAC 1A5A2	8103021091
1A5A2A1	PC ASSY, FILTER, AC/PS	8076021197
1A5A2A2	PC ASSY, 28V REGULATOR, 5 AMP	8078021496
CR1	DIODE, BRIDGE, W&400V	1010600010
J1	CONNECTOR, POWER, 10 PIN, MALE	1011050005
Q1	TRLAC MAC3040-401	1010610015
R1	RESISTOR 30, 5%, law	1000860019
T1	TRANSFORMER, AC, 200VA	1010670026
XF1	FUSEHOLDER, PANEL MOUNT	0849030005
XF2	FUSEHOLDER, PANEL MOUNT	0849030005
ZS1	VARISTOR, MOV V140LA5	1011300010
ZS2	VARISTOR, MOV V140LA5	1011300010
	CHASSIS, AC POWER SUPPLY	8076021502
	CONNECTOR, HOUSING, 10 PIN,MAL	1010860011
	CONNECTOR, POWER, 2 PIN ROUND	1011230011
	FUSE, MDQ, 5 AMP, 250V	0858660008
	FUSE, SFE, 20 AMP, 32V	1011290014
	FUSEMOUNT, 1 POLE W[TERMINALS	0842490001
	HEATSINK, AC POWER SUPPLY	8076021901
	INSULATOR, TO-3 SIL ELASTOMER	0841560005

A11558

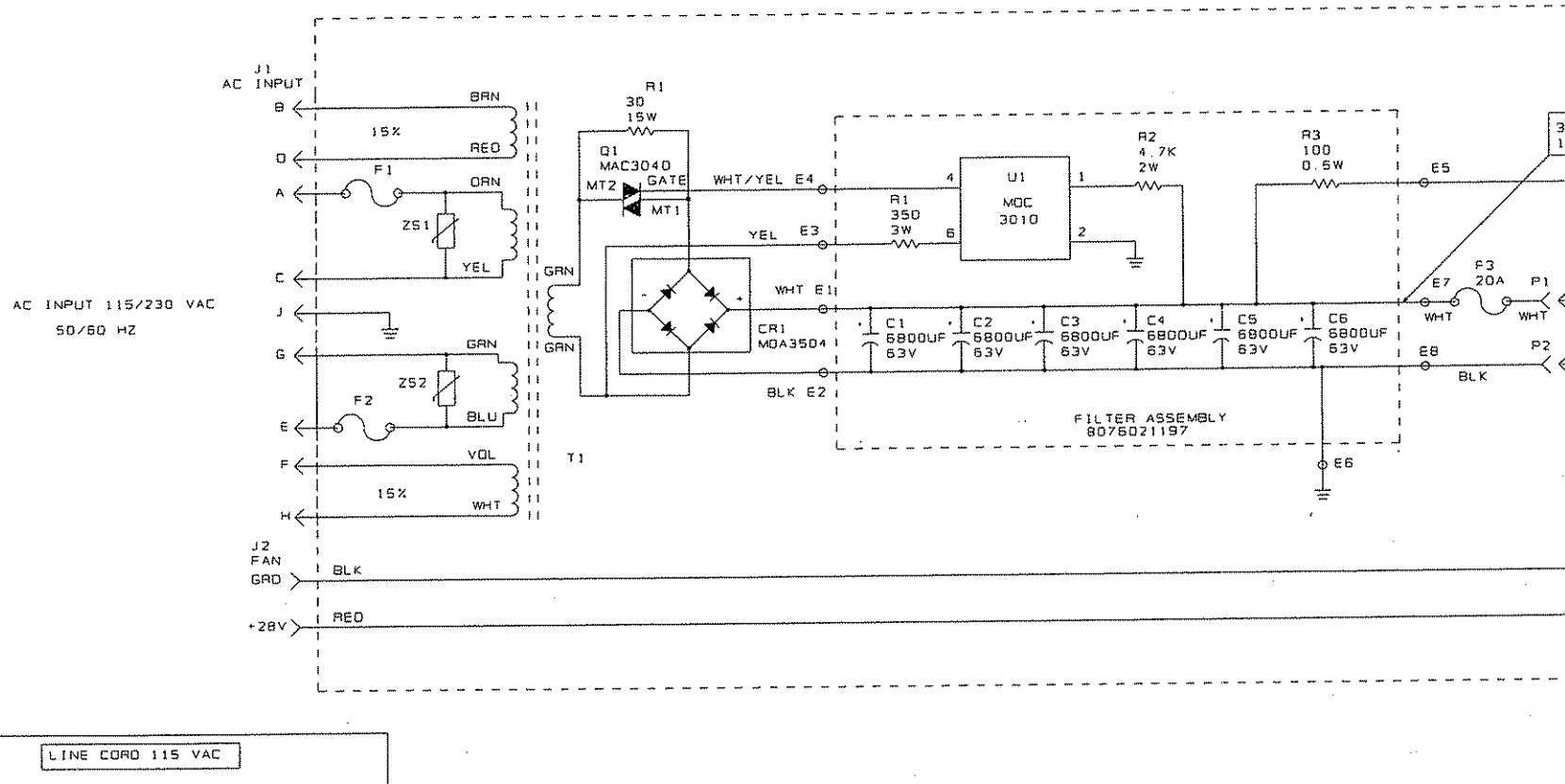
J1
AC INPUT
B
D
A
C
J
G
E
F
H
15%
BRN
RED
F1
ORN
ZS1
YEL
GRN
ZS2
BLU
F2
VOL
WHT
T1
R1
30
15W
Q1
MAC3040
MT2
GATE
MT1
WHT/YEL E4
YEL E3
WHT E1
BLK E2
CR1
MDA3504
R1
350
3W
U1
MOC
3010
R2
4.7K
2W
R3
100
0.5W
C1
6800UF
63V
C2
6800UF
63V
C3
6800UF
63V
C4
6800UF
63V
C5
6800UF
63V
C6
6800UF
63V
FILTER ASSEMBLY
8076021197
E5
E6
E7
E8
F3
20A
P1
P2
AC INPUT 115/230 VAC
50/60 HZ
J2
FAN
GRD
+28V
BLK
RED
LINE CORD 115 VAC

THIS PAGE INTENTIONALLY LEFT BLANK.

1123BP

PC ASSY, FILTER AC/PS 1A5A2A1

	PC ASSY, FILTER, AC/PS 1A5A2A1	8076021197
C1	CAP. 6800 µF, 63V, 20%, 105C	1010800019
C2	CAP. 6800 µF, 63V, 20%, 105C	1010800019
C3	CAP. 6800 µF, 63V, 20%, 105C	1010800019
C4	CAP. 6800 µF, 63V, 20%, 105C	1010800019
C5	CAP. 6800 µF, 63V, 20%, 105C	1010800019
C6	CAP. 6800 µF, 63V, 20%, 105C	1010800019
R1	RESISTOR 350, 5%, 3W	0162930003
R2	RESISTOR 4.7K, 10%, 2W	0164130004
R3	RESISTOR 100, 10%, 1/2W	0174790007
U1	IC LINEAR MOC3010	1010620011

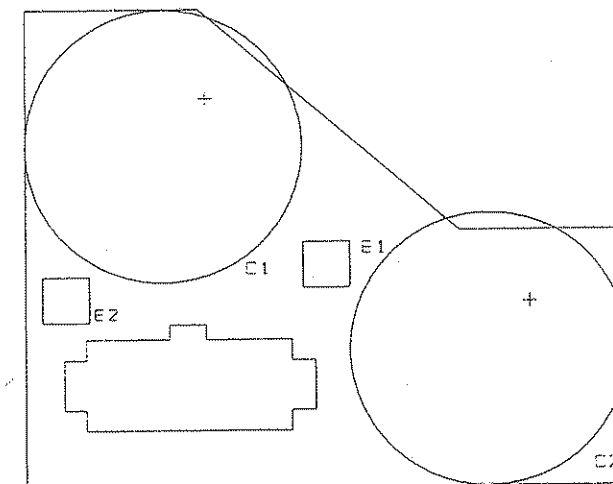

STOR 10K, 5%, 1/8W	1010801031
STOR 2.7M, 5%, 1/4W	1004900007
STOR 10K, 5%, 1/8W	1010801031
STOR 680, 10%, 1/4W	0176630007
STOR, 3.9K, 5%, 1/8W	1010803921
STOR 390, 10%, 1/2W	0173260004
STOR 680, 10%, 1/4W	0176630007
STOR 2.2K, 10%, 1W	0164510001
STOR 5.6K, 5%, 1/8W	1010805622
STOR 4.7K, 5%, 1/8W	1010804723
ID, SLOTTED, HALL EFFECT	1011040018
NEAR LM340/7812	1003410022
NEAR MC1723L	1010270036
GITAL 2501-1	1011000016
NEAR LM311N	1005760021
NEAR UGS3503	1011020017
GITAL ICL7665S	1010940007
EAR UA78L05 AWC	1010150014
ET, XSISTOR, TO-3, HI-PWR	1011220016

1153CP

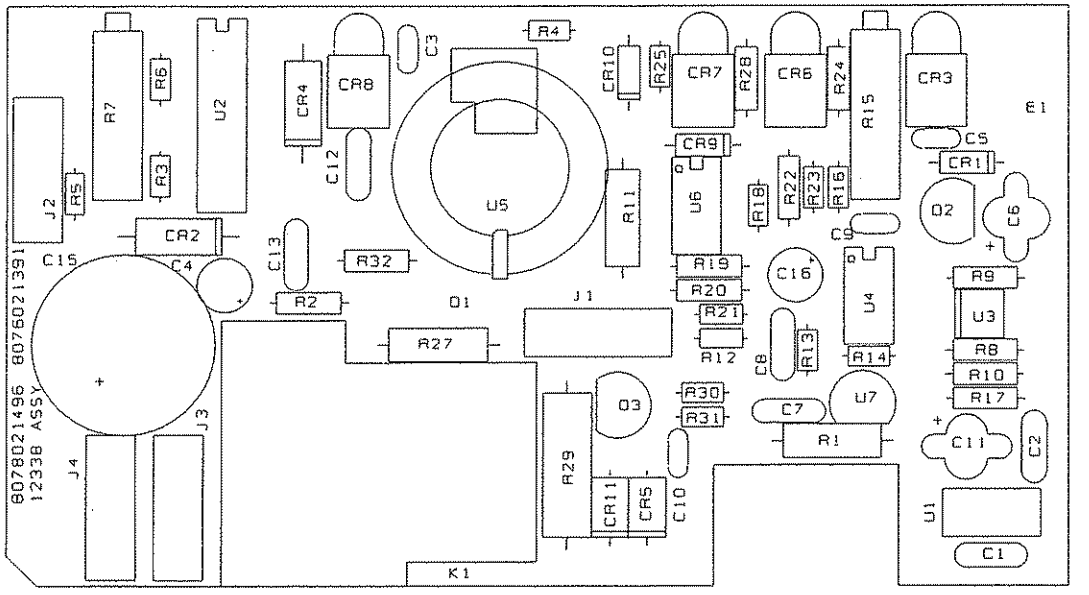

A1153C

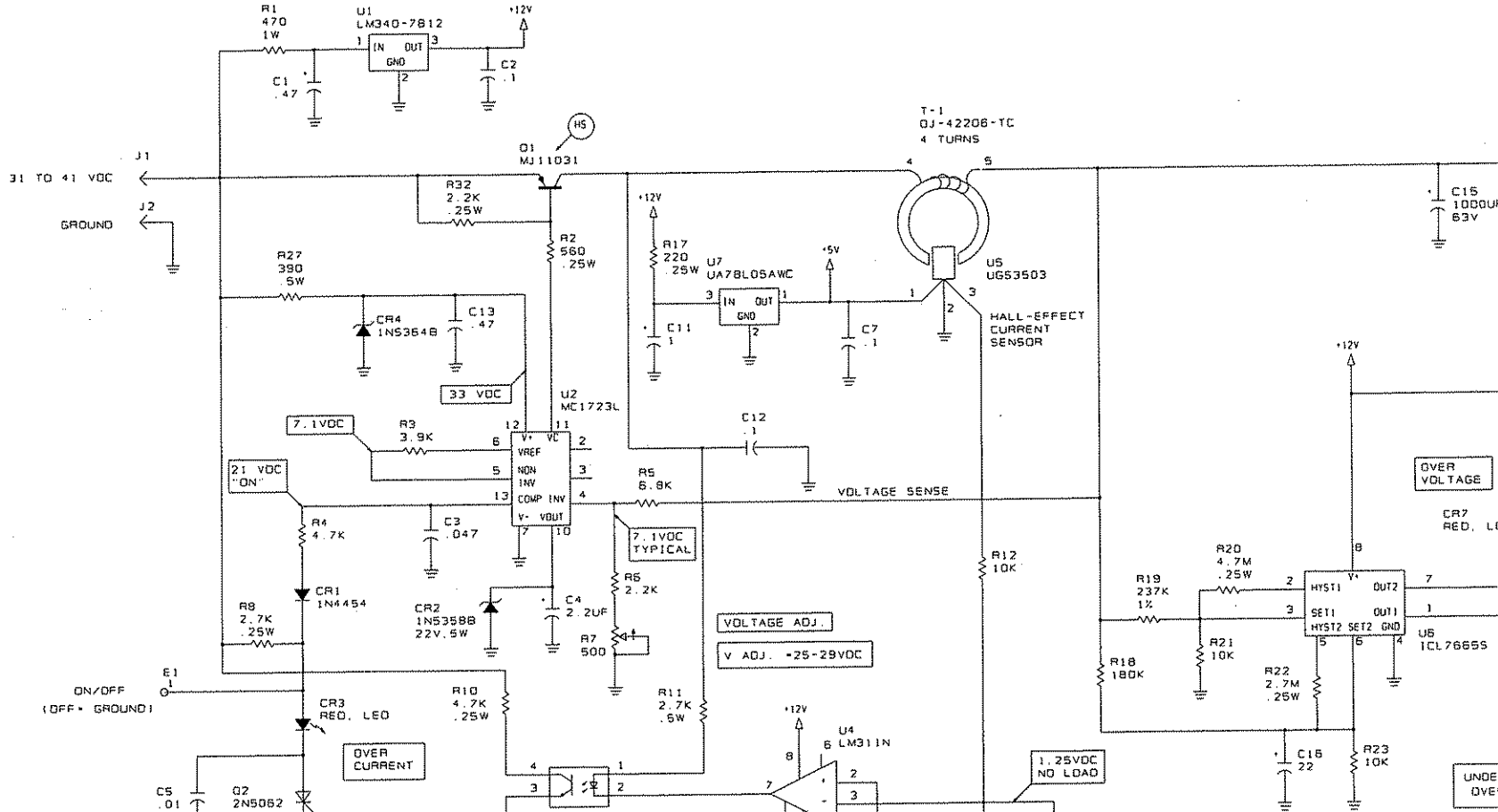
R1
470
1W
U1
LM340-7812
IN OUT
GND
+12V
C1
.47
C2
.1
T-1
OJ-42206-TC
4 TURNS
Q1
MJ11031
HS
J1
31 TO 41 VDC
J2
GROUND
R32
2.2K
.25W
R2
560
.25W
R27
390
.5W
CR4
1N5364B
C13
.47
33 VDC
R17
220
.25W
U7
UA78L05AWC
+5V
C11
1
C7
.1
U5
UGS3503
HALL-EFFECT
CURRENT
SENSOR
C15
1000UF
63V
U2
MC1723L
7.1VDC
R3
3.9K
VREF
NON INV
COMP INV
V- VOUT
V+ VC
C12
.1
21 VDC
"ON"
R4
4.7K
C3
.047
R5
6.8K
VOLTAGE SENSE
7.1VDC
TYPICAL
CR1
1N4454
R9
2.7K
.25W
CR2
1N5358B
22V,5W
C4
2.2UF
R6
2.2K
R7
500
VOLTAGE ADJ.
V ADJ. =25-29VDC
R12
10K
OVER
VOLTAGE
CR7
RED, LE
R20
4.7M
.25W
R19
237K
1%
HYST1
SET1
HYST2
SET2
OUT2
OUT1
GND
U6
ICL7665S
R21
10K
R18
180K
R22
2.7M
.25W
E1
ON/OFF
(OFF= GROUND)
CR3
RED, LED
R10
4.7K
.25W
R11
2.7K
.5W
OVER
CURRENT
U4
6 LM311N
1.25VDC
NO LOAD
C16
22
R23
10K
UNDE
OVE
C5
.01
Q2
2N5062

1116AP

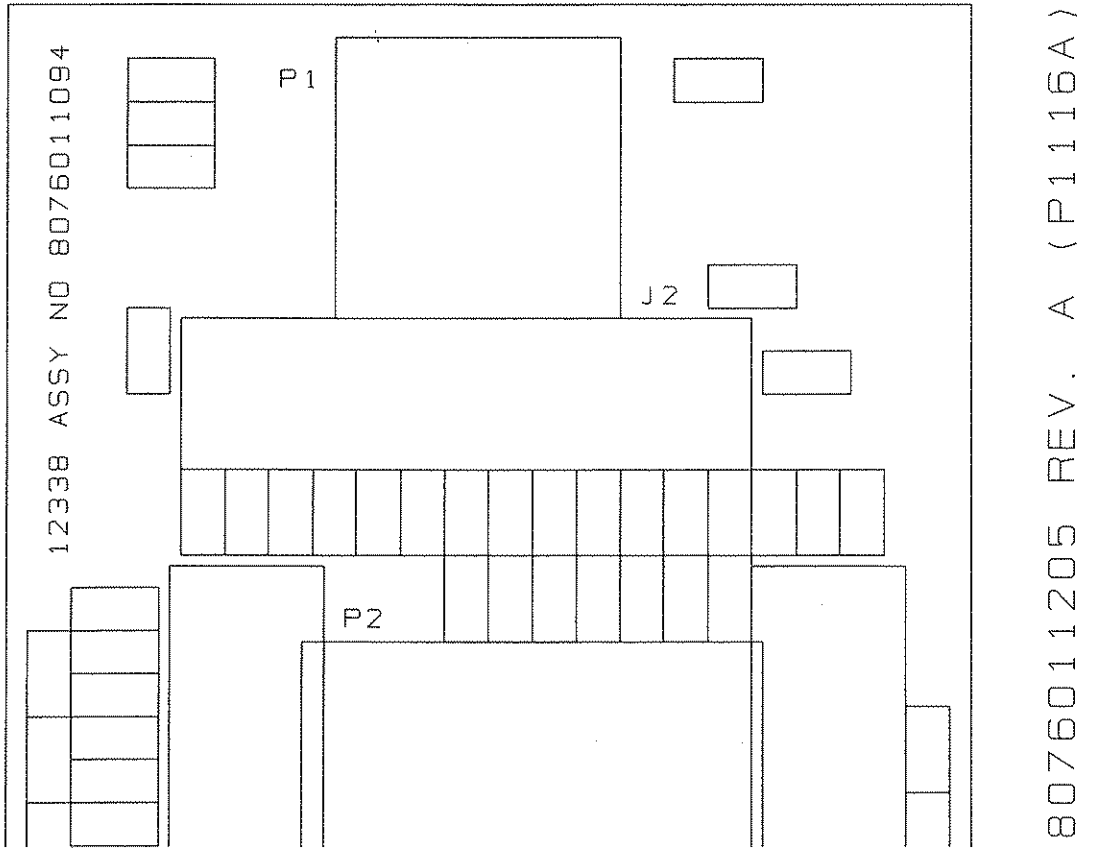

A1116CA

ACCESSORY CONNECTOR

J3 1	TUNE COMMAND	C1 .01	L
J3 2	NOT USED	C2 .01	E
J3 3	KW ALC	C3 .01	M
J3 4	NOT USED	C4 .01	F
J3 5	KW ACC	C5 .01	N
J3 6	NOT USED	C6 .01	O
J3 7	NOT USED	C7 .01	P
J3 8	NOT USED	C8 .01	G
J3 9	KW POWER SELECT 2	C9 .01	R
J3 10	$\overline{\text{BAND 0}}$	C10 .01	H
J3 11	$\overline{\text{BAND 8}}$	C11 .01	S
J3 12	NOT USED (+28V)	C12 .01	R
J3 13	$\overline{\text{BAND 7}}$	C13 .01	T
J3 14	$\overline{\text{BAND 6}}$	C14 .01	I
J3 15	$\overline{\text{BAND 5}}$	C15 .01	U
J3 16	$\overline{\text{BAND 4}}$	C16 .01	K
J3 17	$\overline{\text{BAND 3}}$	C17 .01	V
J3 18	$\overline{\text{BAND 2}}$	C18 .01	J
J3 19	$\overline{\text{BAND 1}}$	C19 .01	W
J3 20	KEYLINE ACCESSORY	C20 .01	X
J4 1	+28 TUNE ENABLE	C21 .01	A
J4 2	KW DETECT	C22 .01	Y
J4 3	COUPLER DETECT	C23 .01	B
J4 4	NOT USED		
J4 5	$\overline{\text{READY}}$	C24 .01	C
J4 6	$\overline{\text{TUNING}}$	C25 .01	Z
J4 7	$\overline{\text{FAULT}}$	C26	D

AUD

J2 1	LSB AUDIO B
J2 2	LSB AUDIO A
J2 3	NOT USED
J2 4	LSB AUDIO A.
J2 5	+12VDC
J2 6	+28VDC
J2 7	+28VDC
J2 8	USB AUDIO A.
J2 9	USB AUDIO B.
J2 10	USB AUDIO A
J2 11	USB AUDIO B
J2 12	KEYLINE REMOTE AUD
J2 13	ANALOG GROUND
J2 14	ANALOG GROUND
J2 15	AUX. AUDIO CONTROL
J2 16	AUX. AUDIO CONTROL
J2 17	KEYLINE DETECT
J2 18	AUX. AUDIO CONTROL
J2 19	SIDETONE
J2 20	LSB AUDIO B.

THIS PAGE INTENTIONALLY LEFT BLANK.

SERVICE BULLETIN

Sunair Electronics, Inc.
3101 S.W. Third Avenue
Ft. Lauderdale, FL 33315-3389 U.S.A.

Product Support Department
Telephone: (954) 525-1505
Fax: (954) 765-1322
Email: techsupport@sunairhf.com

NUMBER: 9000-004 / REV 1

DATE: 30 November 1992 / Revised 14 June 1999

ATTENTION: All Dealers and Customers

EQUIPMENT: RT-9000, T-9400, R-9200 and RCU-9310.

SUBJECT: Replacement of Front Panel Liquid Crystal Display's (LCD's) Back Lighting Devices.

REFERENCE: Applicable Operations and Maintenance Manuals and Diagrams 1 through 3 of this Service Bulletin.

PURPOSE: Installation of new Back Lighting devices for Front Panel LCD'S.

TEXT: The Back Lighting devices for the two (2) Front Panel LCD's P/N 8076041791 and P/N 8076040892 will gradually lose their luminescence with time. For this reason operating personnel should turn OFF the panel light when ever it is not needed to give the Back Lighting devices the longest possible life. This is accomplished by depressing the 'PNL LT' push button on the Front Panel to turn OFF the Back lighting and depressing it again to turn the Back Lighting ON again when needed. Once the Back lighting devices have lost their luminescence, the back light may be renewed by ordering replacement Back Lighting devices for the applicable LCD and installing per inclosed instructions.

1. Custom LCD, Full Function, P/N 8076040604.
   Replacement Back Light, Assembly P/N 8076040892.

2. Custom LCD, 1 x 40 Character, P/N 8076041601.
   Replacement Back Light, Assembly P/N 8076041791.

Replacement of LCD Back Devices

1. Refer to Section V of applicable Operations and Maintenance Manual.

    a. Remove equipment top and bottom covers.

    b. Remove Front Panel IAI assembly.

2. Use enclosed diagrams 1 through 3 to install new back lights in the LCD'S.

3. Replace Front Panel IAI assembly, and top and bottom covers. Return equipment to operational status.

4. Insert this Service Bulletin into Section V of applicable Operations and Maintenance Manual.

    NOTE: Once the Back lights have been replaced initially, they can be replaced again as needed. When the luminescence has decreased remove the installed Back Light and insert a new one in its place.

PRODUCT SERVICE DEPARTMENT
SUNAIR ELECTRONICS, INC.

1. RE[illegible]VE RIBBON CABLE CONNECTORS.
2. REMOVE SIX (6) 4-40 SCREWS, LIFT P.C. BOARD.
3. REMOVE RIBBON CABLE UNDER P.C. BOARD.
4. GO TO DIAGRAM 2 TO REMOVE LCD ASSEMBLY.
5. INSTALL IN REVERSE ORDER.

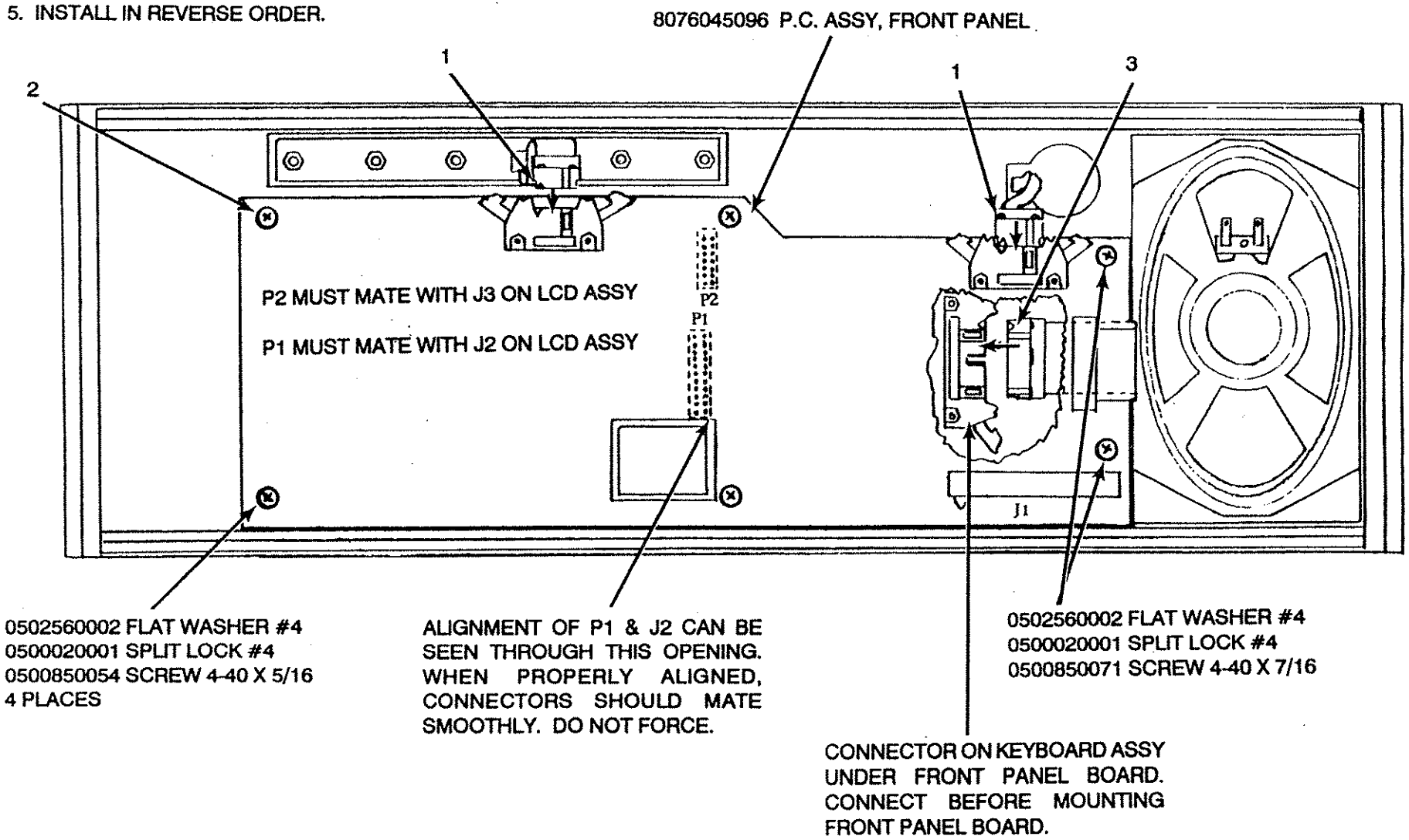

Diagram 1: Removal and Installation of Front Panel P.C. Assembly.

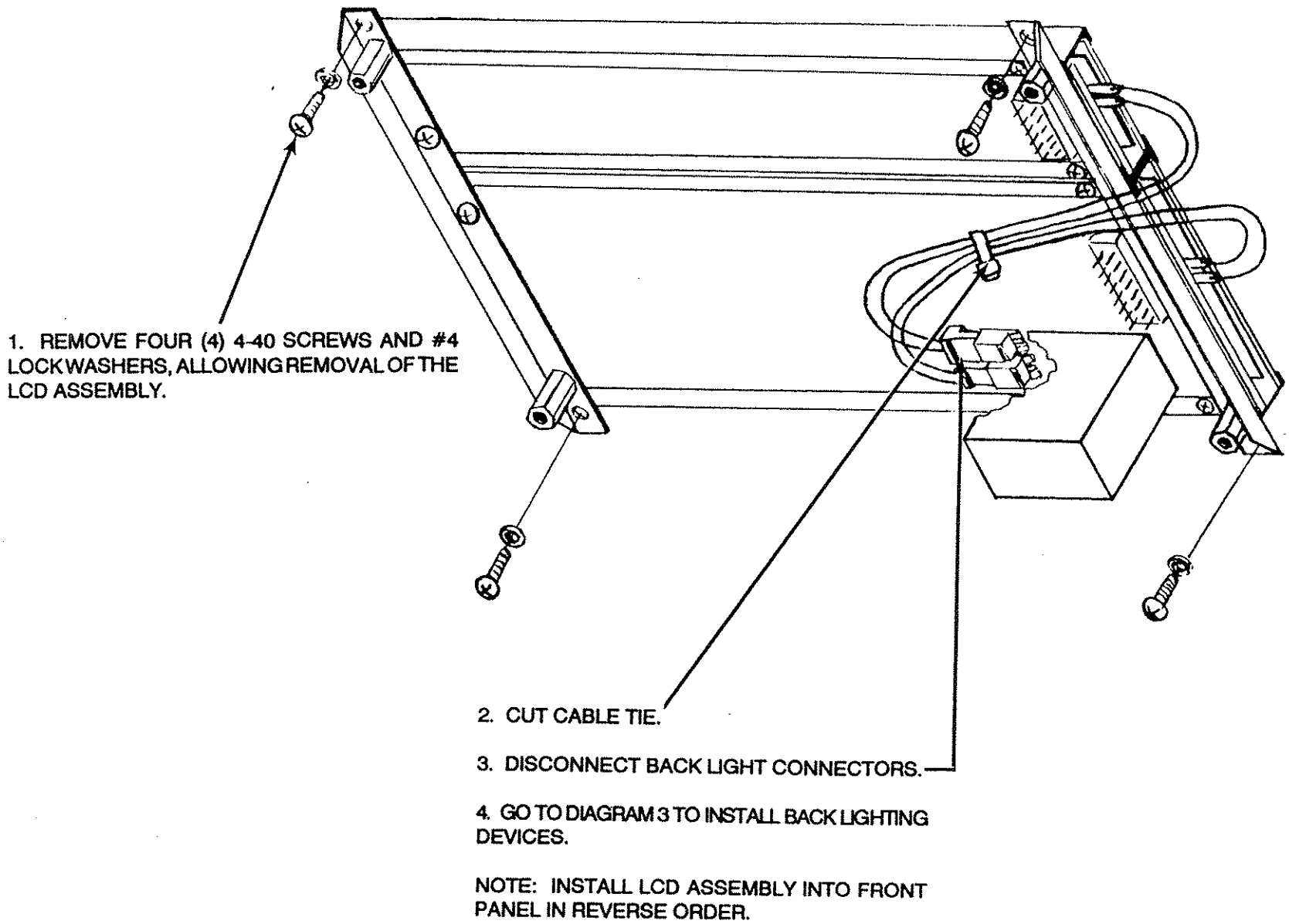

Diagram 2: Removal and Installation of LCD Assembly.

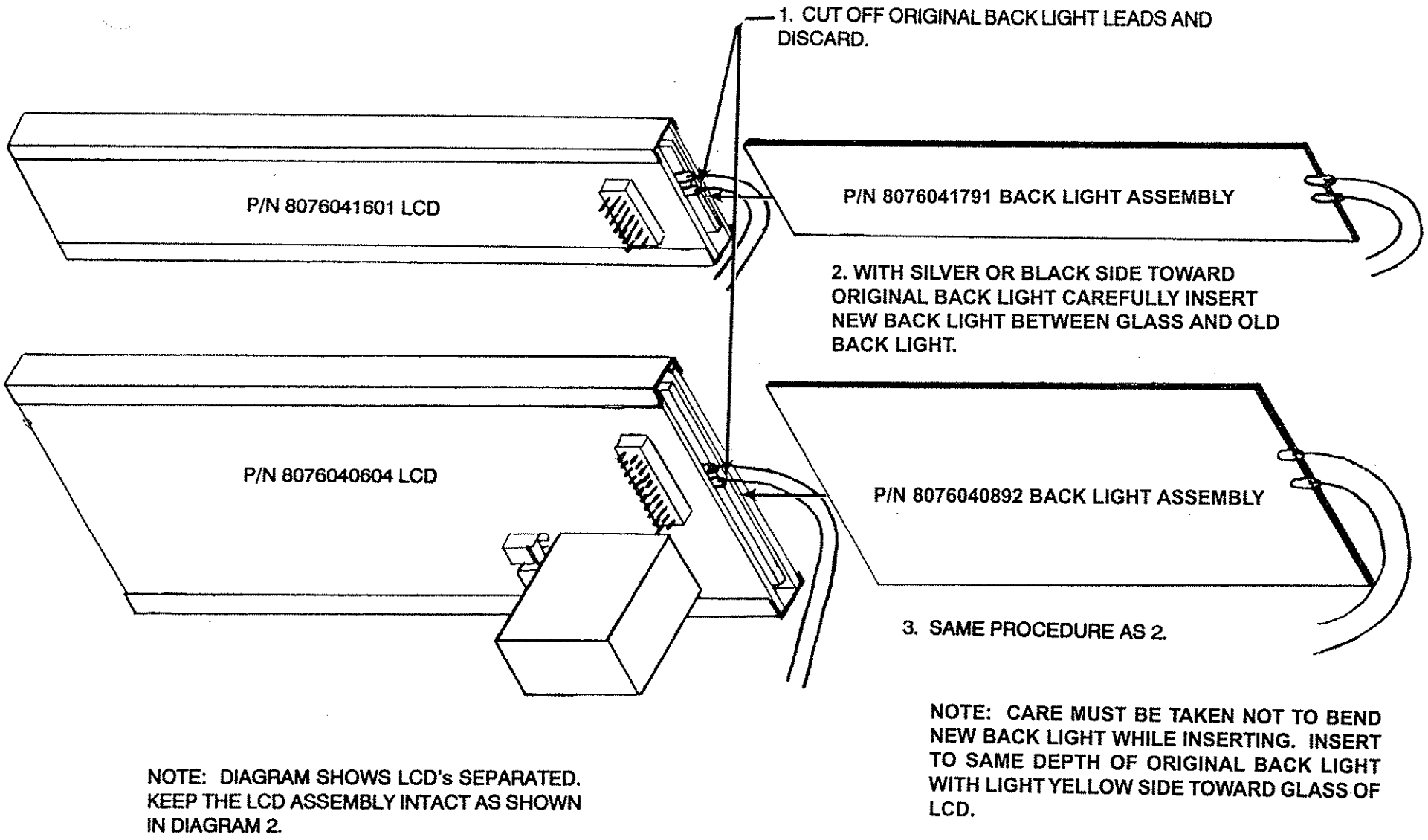

Diagram 3: Installation of Back Lighting Devices.

SERVICE BULLETIN

Sunair Electronics, Inc.
3101 S.W. Third Avenue
Ft. Lauderdale, FL 33315-3389 U.S.A.

Product Support Department
Telephone: (954) 525-1505
Fax: (954) 765-1322

NUMBER: 9000-006

DATE: 3 July 1996

ATTENTION: All Customers using the following 9000 Series HF/SSB equipment.

EQUIPMENT: RT-9000, RT-9000A, R-9200 and T-9400.

SUBJECT: Front Panel LCD, Operational Display P/N 8076040604.

REFERENCE:

1. RT-9000 Manual P/N 8076000505 pages 5-2, 5-12 and 5-44.
2. R-9200 Manual P/N 8102000503 pages 5-2, 5-9 and 5-34.
3. T-9400 Manual P/N 8103000507 pages 5-2, 5-11 and 5-36.
4. Diagram 1 of this Service Bulletin.

PURPOSE: Product reliability improvement that prevents the separation of E.L. Inverter from the front panel LCD Operational Display during removal of 1A2A1 CPU and 1A2A8 I/O assembly or severe shock impact.

TEXT: Occasionally, the LCD Operational Displays are experiencing separation of E.L. Inverter from the printed circuit board of the display. Damage is due to a possible impact between the E.L. Inverter and I/O connector whenever the 1A2A1 CPU and 1A2A8 I/O assembly are removed and replaced. To preclude the possibility of separation of the E.L. Inverter, Sunair is adding an Inverter Cover P/N 8076042801 and Insulator P/N 8076042909 on current production equipment.

A kit is available for field modification of the Operational Displays at a list price of $19.80. The Kit P/N 8076043000 contains:

E.L. Inverter Cover P/N 8076042801
Insulator, E.L. Cover P/N 8076042909
Drawing, Inverter Cover Installation P/N 8076043107

1. See page 5-2 of applicable manual.
   a) Remove top and bottom covers (6 screws and 8 latches).

If you have Surface Mount Technology repair facilities and require the parts list and schematics, please send your request to:

CUSTOMER SERVICES
PRODUCT SERVICE DEPARTMENT
SUNAIR ELECTRONICS, INC.

Telephone: (954) 525-1505

Fax: (954) 765-1322

Email: techsupport@sunairhf.com

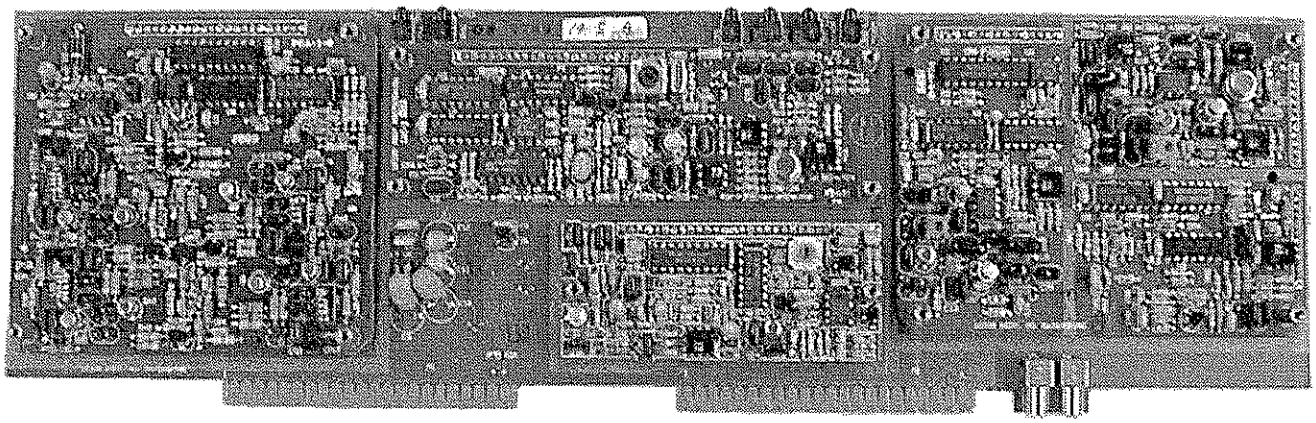

Figure 1 P/N 8076060095 Revision A Synthesizer Module Assembly
(Old Revision)

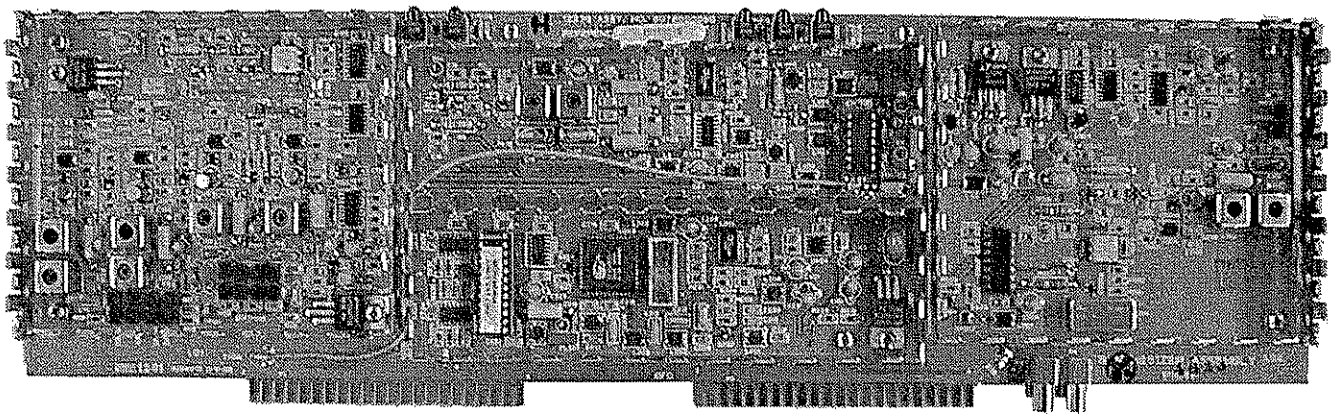

Figure 2 P/N 8076060095 Revision B Synthesizer Printed Circuit Assembly

ADDENDUM

Title : High Stability Reference Oscillator start-up characteristics

Number : 8076-0287

Date : 09 April 03

Equipment(s) Affected : RT-9000A & RT-9000B HF/SSB Transceivers
R-9200 & R-9210 HF/ SSB Receivers
T-9400 & T-9410 HF/SSB Transmitter/Exciters

Applicability : Units with High Stability Reference Oscillator option installed

Effectivity : (not applicable)

The following operating provisions apply to units that have the HIGH STABILITY REFERENCE OSCILLATOR option installed. This option utilizes an Ovenized Frequency Standard and requires additional time to attain specified frequency accuracy and stability performance at initial power-up or after prolonged system shutdown. The operator must consider these requirements and their effect on initial performance when operating this equipment. This condition can be avoided by keeping the radio continuously powered-up. This practice is considered normal for equipment with High Stability Frequency Standards. The following statements summarize behavior of a properly configured radio immediately after the initial power-on event:

1. If the unit has just been installed at the customer site or has not been powered-up for a prolonged time, after power-up the unit may intermittently display "Oven Warm Up" messages.

2. If the unit does not display the message described above, it still inhibits the unit's I/O communication facilities from being used for a short time. The I/O capability is required for operation with remote control units, preselectors, or embedded ALE modules.

3. Unit I/O lockout time is directly related to the unit's internal oven temperature at power-up and the ambient operating temperature. This time typically will be between two (2) minutes and 30 minutes under low temperature conditions.

4. After the above I/O lockout time elapses, the unit becomes fully functional but at reduced Frequency Accuracy.

5. During the first hour of operation while the oven is stabilizing at its design temperature, invoking the Built In Test Equipment (BITE) function may produce erroneous failures. After this time, all BITE test failures should be considered genuine and appropriately addressed.

6. Frequency Accuracy is specified to be within one (1) part in 10^7 within one (1) hour after power-up.

7. Frequency Accuracy is specified to be within one (1) part in 10^8 within 72 hours after power-up.

8. The unit must be maintained in a continuous "power on" state to achieve the specified frequency accuracy and stability specifications. The benefits offered by the HIGH STABILITY REFERENCE OSCILLATOR option are available only if this condition is satisfied.

9. Any power interruptions will cause the unit to execute its normal start-up I/O lockout interval as previously described.

Copyright © 2003 by Sunair Electronics Inc.