NOTE:

All references to T-9400 in this Manual are to be read as T-9410.

TM-8103000507

DIGITAL HF/ISB EXCITER

T-9400

OPERATION and MAINTENANCE MANUAL

SUNAIR® 3101 SW Third Avenue, Ft. Lauderdale, FL 33315-3389

WARRANTY POLICY

GROUND AND MARINE PRODUCTS

Sunair Electronics warrants equipment manufactured by it to be free from defects in material or workmanship, under normal use for the lesser of one (1) year from the date of installation or 15 months from date of shipment by Sunair.

Sunair will repair or replace, at its option, any defective equipment or component of the equipment returned to it at its factory, transportation prepaid, within such warranty period. No reimbursement will be made for non-factory repair charges.

This warranty is void if equipment is modified or repaired without authorization, subject to misuse, abuse, accident, water damage or other neglect, or has its serial number defaced or removed.

THIS WARRANTY IS ESPECIALLY IN LIEU OF ANY AND ALL OTHER WARRANTIES EXPRESSED OR IMPLIED, INCLUDING ANY IMPLIED WARRANTY OF MERCHANTABILITY OR FITNESS FOR A PARTICULAR PURPOSE. The obligation and responsibility of Sunair shall be limited to that expressly provided herein and Sunair shall not be liable for consequential or other damage or expense whatsoever therefore or by any reason thereof.

Sunair reserves the right to make changes in design or additions to or improvements in its equipment without obligation to install such additions or improvements in equipment theretofore manufactured.

SUNAIR ELECTRONICS, INC.

SUNAIR

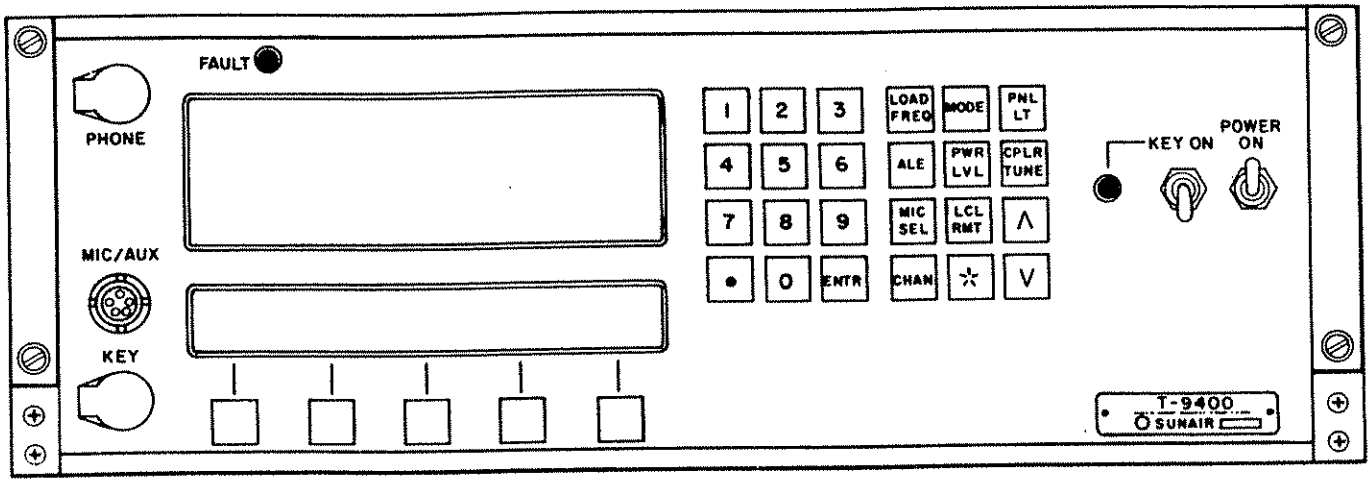

T-9400

DIGITAL HF/ISB EXCITER

OPERATION AND MAINTENANCE MANUAL

FIRST EDITION MARCH, 1991
SECOND REVISION NOVEMBER, 1992

PRODUCT SERVICE:

In case of difficulty please contact the Sunair Product Service Department, between the hours of 8:00 AM and 5:00 PM Eastern Time or write to:

Product Service Dept.
Sunair Electronics, Inc.
3101 SW Third Avenue
Ft. Lauderdale, FL 33315-3389
U.S.A.

Telephone: (954) 525-1505

Fax: (954) 765-1322

e-mail: techsupport@sunairhf.com

TRAINING:

Sunair offers training programs of varying lengths covering operation, service, and maintenance of all Sunair manufactured equipment. For details please contact the Product Service Department.

TABLE of CONTENTS

Section	Description	Page
I	**GENERAL INFORMATION**	
	1.1 SCOPE OF MANUAL	1-1
	1.2 PURPOSE OF EQUIPMENT	1-1
	1.3 GENERAL DESCRIPTION	1-1
	1.4 TECHNICAL SPECIFICATIONS	1-2
	1.4.1 GENERAL	1-2
	1.4.2 TRANSMITTER SPECIFICATIONS	1-2
	1.4.3 ENVIRONMENTAL	1-3
	1.5 HIGH FREQUENCY PROPAGATION	1-3
	1.6 EQUIPMENT SUPPLIED	1-4
	1.7 OPTIONS AVAILABLE	1-4
II	**INSTALLATION**	
	2.1 GENERAL	2-1
	2.2 UNPACKING AND INSPECTION	2-1
	2.3 RETURN OF EQUIPMENT TO FACTORY	2-1
	2.4 GENERAL INSTALLATION AND MOUNTING INFORMATION	2-2
	2.4.1 GENERAL INSTALLATION	2-2
	2.4.2 BASE STATION INSTALLATION	2-5
	2.4.3 VEHICULAR INSTALLATIONS	2-8
	2.4.4 MARINE INSTALLATIONS	2-9
	2.4.5 RACK INSTALLATIONS	2-10
	2.5 ANTENNAS AND GROUND SYSTEMS	2-11
	2.5.1 GENERAL	2-11
	2.5.2 NARROW BAND 50 OHM ANTENNAS	2-11
	2.5.3 RANDOM LENGTH NON-RESONANT ANTENNAS	2-11
	2.5.4 BROADBAND 50 OHM ANTENNAS	2-12

TABLE of CONTENTS (Cont...)

Section	Description	Page
III	**OPERATION**	
3.1	GENERAL	3-1
3.2	PRIMARY OPERATIONS	3-3
3.2.1	EXCITER SET UP FOR MODE, AGC AND TRANSMIT POWER	3-3
3.2.2	SELECTING AN OPERATING FREQUENCY	3-4
3.2.3	ANTENNA COUPLER TUNING	3-6
3.2.4	PANEL LIGHTING	3-6
3.2.5	OPERATING WITH PRE-SET CHANNELS	3-7
3.2.6	MANUAL CHANNEL SCANNING	3-8
3.2.7	LOADING PRE-SET CHANNEL FREQUENCIES	3-8
3.3	EQUIPMENT SET-UP	3-11
3.3.1	BITE (Built In Test Equipment)	3-11
3.3.2	METER FUNCTIONS	3-13
3.3.3	'MHz' or 'kHz' FREQUENCY DISPLAY	3-14
3.3.4	LOCAL/REMOTE OPERATION	3-15
3.3.5	TIME DISPLAY	3-16
3.3.6	CHANNEL CLEARING AND SOFTWARE REVISION LEVEL	3-18
3.3.7	'I/O' PORT SET-UP	3-19
3.3.8	ADDRESS	3-21
3.3.9	'CW' KEY AND FILTER OPTIONS	3-22
3.3.10	LINE AUDIO SELECTION	3-22
3.3.11	TRANSMIT GAIN CONTROL (TGC SETUP)	3-23
3.3.12	ISB MODE - LSB LINE OR USB LINE METER SELECTION	3-24

TABLE of CONTENTS (Cont...)

Section	Description	Page
3.4	ADVANCED OPERATIONS	3-25
3.4.1	OPTIONS	3-25
3.4.1.1	OVEN	3-25
3.4.1.2	LSB DATA FILTER	3-25
3.4.1.3	USB DATA FILTER	3-26
3.4.1.4	POST SELECTOR	3-27
3.4.1.5	RADIO SECURITY	3-27
IV	THEORY OF OPERATION	
4.1	GENERAL	4-1
4.2	NON-SIGNAL SECTION	4-1
4.2.1	FRONT PANEL ASSEMBLY 1A1	4-1
4.2.2	MICROPROCESSOR ASSEMBLY 1A2A1	4-2
4.2.2.1	GENERAL	4-2
4.2.2.2	MICROPROCESSOR U2	4-2
4.2.2.3	ERASABLE PROGRAMMABLE READ ONLY MEMORY (EPROM) U13	4-2
4.2.2.4	STATIC RANDOM ACCESS MEMORY (SRAM) U3	4-2
4.2.2.5	ELECTRICALLY ERASABLE PROGRAMMABLE READ ONLY MEMORY (EEPROM) U8	4-3
4.2.2.6	OPTIONAL SMART WATCH U14(A)	4-3
4.2.3	OPTOCOUPLER ASSEMBLY 1A2A1A1	4-3
4.2.4	SYNTHESIZER ASSEMBLY 1A2A2	4-3
4.2.4.1	GENERAL	4-3
4.2.4.2	THIRD L.O./BFO ASSEMBLY 1A2A2A3	4-3
4.2.4.3	SECOND L.O. ASSEMBLY 1A2A2A2	4-4
4.2.4.4	FIRST L.O. ASSEMBLY 1A2A2A1	4-4
4.2.4.5	REFERENCE LOOP AND DOUBLER ASSEMBLY 1A2A2A4	4-4

TABLE of CONTENTS (Cont...)

Section	Description	Page
4.3	SIGNAL SECTION	4-4
4.3.1	GENERAL SIGNAL FLOW	4-5
V	**FAULT ISOLATION/MAINTENANCE AND REPAIR**	
5.1	GENERAL	5-1
5.2	DISASSEMBLY	5-1
5.2.1	TOP OR BOTTOM EXCITER COVER REMOVAL	5-1
5.3	TEST SET-UP	5-1
5.3.1	PRELIMINARY	5-1
5.4	BITE	5-1
5.4.1	PRELIMINARY	5-1
5.4.2	NON SIGNAL PATH MODULES	5-9
5.4.2.1	FRONT PANEL FAULT	5-10
5.4.2.2	CPU FAULT	5-10
5.4.2.3	I/O FAULT	5-10
5.4.2.4	SYNTHESIZER FAULT	5-10
5.4.2.5	POWER SUPPLY FAULT	5-14
5.4.3	SIGNAL MODULES	5-19
5.4.3.1	AUDIO FAULT	5-19
5.4.3.2	IF FAULT	5-19
5.4.3.3	FRONT END FAULT	5-19
5.4.3.4	POWER AMP FAULT	5-19
5.4.3.5	FILTER MODULE FAULT	5-19
5.5	TROUBLE SHOOTING WITH SELF-SURVEILLANCE BITE	5-20
5.5.1	DC TO DC POWER SUPPLY	5-20
5.5.2	AC POWER SUPPLY	5-20
5.5.3	SELECT/DISTRIBUTION REFERENCE AMPLIFIER	5-20
5.6	TEST EQUIPMENT REQUIRED OR EQUIVALENT	5-23

TABLE of CONTENTS (Cont...)

Section	Description	Page
5.7	EXCITER ALIGNMENT AND CHECKS	5-23
5.7.1	AUTOMATIC LEVEL CONTROL (ALC)	5-27
5.7.2	LOW POWER AUTOMATIC LEVEL CONTROL (ALC)	5-27
5.7.3	AUTOMATIC CARRIER CONTROL (ACC)	5-28
5.7.4	VSWR AUTOMATIC LEVEL CONTROL (ALC)	5-28
5.7.5	AM MODULATION	5-29
5.7.6	USB/LSB MODULATION	5-29
5.7.7	EXCITER OUTPUT FREQUENCY	5-30
5.7.8	USB/LSB TRANSMIT LINE LEVEL	5-30
5.7.9	TRANSMIT GAIN CONTROL (TGC SETUP)	5-32
5.8	SCHEMATICS AND PARTS LISTS	5-34

TABLE of ABBREVIATIONS

ADDR Address
AGC Automatic Gain Control
ALC Automatic Level Control
AM Amplitude Modulation
AME Amplitude Modulation Equivalent
AMP/AMPL Amplifier
ARQ Automatic Request
AUD Audio
AUTO Automatic
AUX Auxiliary
BAUD A variable unit of data transmission speed (bits per second)
BELL U.S. Telephone standards
BFO Beat Frequency Oscillator
BITE Built In Test Equipment
BRD Board
CH /CHAN /CHL/CHN Channel
CLR Clear
CMOS Complementary Metal Oxide Semiconductor
CPLR Coupler
CPU Computer
CW Carrier Wave
dB Decibel
dBm Decibels referred to 1 milliwatt across 600 ohms
DSBSC Double Sideband Suppressed Carrier
DSP Display
DUART Dual Asynchronous Receive/Transmit
EEPROM Electrically Erasable and Programmable Read Only Memory
EPROM Electrically Programmable Read Only Memory
EMI Electromagnetic Radiation Interference
ENTR Enter
FAX Facsimile
FEC Forward Error Correction
FREQ Frequency
FSK Frequency Shift Keying
FWD Forward
GRP Group
HF High Frequency
Hz Hertz
IC Integrated Circuit
IF Intermediate Frequency
I/O Input/Output
IONCAP Ionospheric Communications Analysis and Prediction
kHz Kilohertz
kW Kilowatt
ISB Independent Sideband
LCD Liquid Crystal Display
LCL Local
LED Light Emitting Diode
LK Link
LO Local Oscillator
LP/LPX Lincompex
LRU Lowest Repairable Unit
LSB Lower Sideband
LT Light
LVL Level
MAN Manual
M CH Manual Channel
MED Medium
MHz Megahertz
MIC Microphone
MIL-STD Military Standard
MNL Manual
ms Millisecond
MTTR Mean Time To Repair
MTR Meter
NAR Narrow
O.D. Olive Drab
PA Power Amplifier
PC Printed Circuit
PEP Peak Envelope Power
PLL Phase-Locked Loop
P/N Part Number
PNL Panel
POSTSL Post-Selector
PRESEL Pre-Selector
PTT Push-To-Talk
PWR Power
RCV/RX Receive
REFL Reflected
REV Revision
RF Radio Frequency
RFI Radio Frequency Interference
RFL Reflected
RMT Remote
RS232 Computer control, hardwired up to 50 feet maximum
RS422 Computer control, hardwired up to 4000 feet maximum
RS485 Computer control, hardwired for multiple users
RTTY Radio Teletype
SEL Select
SLO Slow
S MTR Signal Strength Meter
SPKR Speaker
SPLX Simplex
SRAM Static Random Access Memory
SSB Single Sideband
TCXO Temperature Controlled Crystal Oscillator
TGC Transmit Gain Control
THD Total Harmonic Distortion
TTL Transistor Transistor Logic
TX/XMT Transmit
USB Upper Sideband
UTC Universal Time
VCO Voltage Controlled Oscillator
VHF Very High Frequency
VRMS Volts Root Mean Square
VSWR Voltage Standing Wave Ratio
W Watt
WPM Words Per Minute
* Asterisk indicates function selected

LISTING of FIGURES

Section	Description	Page
II	**INSTALLATION**	
Figure 2.4.1.1	T-9400 Outline Dimensions.	2-6
Figure 2.4.1.2	Cable Assembly, T-9400 Audio Interface.	2-7
Figure 2.4.3.1	Outline Dimensions of T-9400 with Shockmount.	2-8
Figure 2.4.3.2	Grounding of T-9400 to Shockmount.	2-9
Figure 2.4.5.1	Installation of T-9400 in Equipment Rack.	2-10
III	**OPERATION**	
Figure 3.1.1	Front panel controls for the T-9400.	3-1
Figure 3.1.2	Operational Display Information Location.	3-2
Figure 3.2.1.1	Exciter Display Screens.	3-4
Figure 3.2.2.1	T-9400 Operating Controls.	3-5
Figure 3.2.5.1	T-9400 Operating Controls.	3-7
Figure 3.2.6.1	T-9400 Manual Channel Scanning Controls.	3-8
Figure 3.2.7.1	T-9400 Channel Loading Controls.	3-9
Figure 3.2.7.2	T-9400 'Feature Display'.	3-10
Figure 3.3.1.1	The T-9400's Function/Status Display Screen.	3-11
Figure 3.3.1.2	Feature Display.	3-12
Figure 3.3.2.1	T-9400 Operational Displays.	3-13
Figure 3.3.2.2	T-9400 Meter Function Select Display.	3-13
Figure 3.3.3.1	T-9400 Operating Controls.	3-14
Figure 3.3.4.1	Local/Remote Selection.	3-15
Figure 3.3.5.1	Feature Menu Display Screen.	3-16
Figure 3.3.5.2	Time Display and Time Set Display.	3-16
Figure 3.3.5.3	Time Display.	3-17
Figure 3.3.5.4	'Set-Time' Display.	3-17
Figure 3.3.6.1	Operational Controls for Selecting Memory Dump.	3-18
Figure 3.3.7.1	T-9400 Rear Surface Connectors.	3-19

LISTING of FIGURES (Cont...)

Section	Description	Page
Figure 3.3.7.2	Feature Display of Port Selection Menu.	3-19
Figure 3.3.7.3	Port Conditioning Menu.	3-20
Figure 3.3.7.4	Baud Rate Display.	3-20
Figure 3.3.7.5	Baud Rate Selection Menu.	3-20
Figure 3.3.8.1	Address 00 Display.	3-21
Figure 3.3.9.1	Feature Menu for Selection of 'CW' Options.	3-22
Figure 3.3.10.1	Feature Display of Port Selection Menu.	3-22
Figure 3.3.10.2	Line Audio Selection Menu.	3-23
Figure 3.3.11.1	Transmit Gain Control Setup.	3-23
Figure 3.3.12.1	Feature Menu Display Screen.	3-24
Figure 3.3.12.2	Meter Function Select Display.	3-24
Figure 3.4.1.2.1	Feature Display for LSB FILTER Selection.	3-25
Figure 3.4.1.2.2	Feature Display for LSB Filter Mode Selection.	3-26
Figure 3.4.1.3.1	Feature Display for USB Filter Selection.	3-26
Figure 3.4.1.3.2	Feature Display for USB Filter Mode Selection.	3-27
Figure 3.4.1.4.1	Feature Display For `POST-SELECTOR' Selection.	3-27
IV	**THEORY OF OPERATION**	
Figure 4.1.1	T-9400 Block Diagram.	4-7
V	**FAULT ISOLATION/MAINTENANCE AND REPAIR**	
Figure 5.2.1.1	Top or Bottom Exciter Cover Removal.	5-2
Figure 5.3.1.1	Exciter BITE Test Set-Up.	5-3
Figure 5.4.1.1	Top View of T-9400 LRU 'Fault Indicators'.	5-4
Figure 5.4.1.2	Bottom View of T-9400 AC Power LRU 'Fault Indicators' Location.	5-5
Figure 5.4.1.3	Module Cover Removal.	5-6
Figure 5.4.1.4	Major Assembly Locations.	5-7
Figure 5.4.1.5	Feature Display.	5-8

LISTING of FIGURES (Cont...)

Section	Description	Page
Figure 5.4.1.6	The T-9400's Function/Status Display Screen.	5-9
Figure 5.4.2.1.1	Front Panel (1A1) Removal.	5-11
Figure 5.4.2.2.1	Removall/Replacement of CPU 1A2A1 and I/O 2A8.	5-12
Figure 5.4.2.2.2	Removal/Replacement of 1A2A8.	5-13
Figure 5.4.2.4.1	Removal/Installation of Modules 1A4, 1A5, and Optional Fans.	5-15
Figure 5.4.2.4.2	Removal/Installation of AC Power Supply Module 5A2.	5-16
Figure 5.4.2.4.3	Removal/Installation of DC Power Supply PC Board 1A5A1A2.	5-17
Figure 5.4.2.4.4	Removal/Installation of Module 1A3 and 1A5.	5-18
Figure 5.7.1	Exciter Alignment Test Equipment Connections.	5-24
Figure 5.7.2	Alignment Adjustment Locations.	5-26
Figure 5.8.1	Final Tested T-9400, Connector Kit, and Chassis Assembly 1A7.	5-35
Figure 5.8.2	Front Panel Assembly 1A1, 4 pages.	5-36
Figure 5.8.3	PC Assembly, Mother Board 1A2A7, 4 pages.	5-40
Figure 5.8.4	PC Assembly, CPU 1A2A1, 6 pages.	5-44
Figure 5.8.5	PC Assembly Optocoupler 1A2A1A1, 2 pages.	5-50
Figure 5.8.6	Synthesizer Module 1A2A2 PC Assembly.	5-53
Figure 5.8.7	Synthesizer Mother Board 1A2A2A5, 2 pages.	5-54
Figure 5.8.8	PC Assembly, First L.O. 1A2A2A1, 2 pages.	5-56
Figure 5.8.9	PC Assembly, Second L.O. 1A2A2A2, 3 pages.	5-59
Figure 5.8.10	PC Assembly, BFO 1A2A2A3, 2 pages.	5-62
Figure 5.8.11	PC Assembly, Reference Loop and Doubler 1A2A2A4, 2 pages.	5-64
Figure 5.8.12	PC Assembly, Audio 1A2A3, 8 pages.	5-66
Figure 5.8.13	PC Assembly, IF 1A2A4, 10 pages.	5-74
Figure 5.8.14	PC Assembly, Front End 1A2A5, 4 pages.	5-84

LISTING of FIGURES (Cont...)

Section	Description	Page
Figure 5.8.15	PC Assembly, Reference Driver 1A2A6, 2 pages.	5-88
Figure 5.8.16	PC Assembly, I/O Board 1A2A8, 3 pages.	5-91
Figure 5.8.17	PC Assembly, FSK Modem 1A2A8A1, 2 pages.	5-94
Figure 5.8.18	Filter Assembly 1A3.	5-97
Figure 5.8.19	PC Assembly, Detector 1A3AL, 2 pages.	5-98
Figure 5.8.20	PC Assembly, Bands 1-4 1A3A2, 2 pages.	5-100
Figure 5.8.21	PC Assembly, Bands 5-8 1A3A3, 2 pages.	5-102
Figure 5.8.22	Power Amplifier Assembly 1A4, 2 pages.	5-104
Figure 5.8.23	Power Supply Assembly 1A5A1.	5-107
Figure 5.8.24	PC Assembly, Switching Regulators 1A5A1A1, 2 pages.	5-108
Figure 5.8.25	PC Assembly, Control Logic, DC/PS 1A5A1A2, 2 pages.	5-110
Figure 5.8.26	Power Supply Assembly 115/230 VAC 1A5A2, 2 pages.	5-112
Figure 5.8.27	PC Assembly, Filter, AC/PS 1A5A2A1, 1 page.	5-115
Figure 5.8.28	PC Assembly, 28V Regulator, 17 AMP 1A5A2A2, 2 pages.	5-116
Figure 5.8.29	PC Assembly, Rear Panel Connector 1A6A1, 2 pages.	5-118

LISTING of TABLES

Section	Description	Page
V	**FAULT ISOLATION/MAINTENANCE AND REPAIR**	
Table 5.5.1	DC to DC and AC Power Supply Troubleshooting.	5-21
Table 5.5.2	Select/Distribution Reference Amplifier Troubleshooting.	5-22
Table 5.7.1	Power vs Voltage.	5-25
Table 5.7.8.1	Switch Settings for 1A2A1 S1.	5-33
Table 5.8	T-9400 Table of Assemblies.	5-34

THIS PAGE INTENTIONALLY LEFT BLANK.

SECTION I

GENERAL INFORMATION

1.1 SCOPE OF MANUAL

This manual contains information necessary to install, operate, and maintain the T-9400 HF/ISB Digital Exciter. Installation information is in Section II. Operating Instructions are in Section III. Theory of Operation is in Section IV. Maintenance and Repair Procedures are in Section V. Information in this manual applies to all equipment configurations, unless otherwise stated in the text or illustrations.

1.2 PURPOSE OF EQUIPMENT

The T-9400 is a 125 Watt HF/ISB Digital Exciter capable of providing communications from 1.6 to 29.99999 MHz. Modes of operation include USB, LSB, ISB, AME, and CW (FSK, FAX, High Speed DATA, ARQ and FEC are available with optional external modems). The T-9400 is designed to be used in fixed station or mobile environments and can be computer or remotely controlled via RS232/422/485/FSK tones. The standard features along with the available options make the T-9400 the most versatile and expandable HF system on the market today.

Features of the T-9400 include: ISB operation, manual or memory frequency selection in 10 Hz steps, 128 programmable channels, AC/DC operation with auto changeover, keyboard entry, nonvolatile memory using EEPROM (no batteries required), BITE to LRU (Lowest Repairable Unit), computer control, and high speed data capability.

1.3 GENERAL DESCRIPTION

The T-9400 can be used in base station 19 inch rack installations, on table tops, in mobile installations and transportable cases. Its rugged package makes the T-9400 ideal for all environments. Internally, the T-9400 is designed with the service technician in mind. Descriptive readouts on the front panel (BITE) and modularized plug-in assemblies make the MTTR (Mean Time To Repair) less than fifteen (15) minutes. LEDs located on the assemblies allow the technician to pin-point the faulty module immediately. The T-9400 is lightweight for its capability, only thirty-six pounds (36 lbs.) when used on DC only and forty-nine pounds (49 lbs.) with AC supply installed. Available in Olive Drab (OD) or Gray, the T-9400 is compatible with most radio station color schemes. If a particular color other than OD or Gray is required, contact the Sunair Marketing Department for information concerning changes to the standard colors.

The T-9400 has a simple, easily understood front panel. First time users can operate the radio without extensive training. The wide screen LCD is continuously updated by the microprocessor with operational status such as Frequency, Channel, Mode, Power, Local or Remote Control. The LCD also contains a bar graph meter which selectively indicates forward RF power, reverse RF power and remote transmit audio levels. The built-in-test routines include power amplifier and antenna coupler status in plain English messages which appear in the display. Softkeys and a softkey menu LCD display selected options such as Time, CW Filter, etc. The softkeys also provide access to remote control configuration, meter selection, and other operating features not found on the front panel keyboard.

1.4 TECHNICAL SPECIFICATIONS

1.4.1 GENERAL

FREQUENCY RANGE: 1.6 to 29.99999 MHz in 10 Hz steps.

PROGRAMMABLE CHANNELS: 128.

FREQUENCY STABILITY: 1 X 10^6 (Optional ± 1 part in 10^8).

MODES OF OPERATION: USB, LSB, ISB, CW, AME, DATA (RTTY, ARQ, FEC,FAX with optional external modems).

MEMORY RETENTION: Non-Volatile.

SYNTHESIZER LOCK: 10 ms.

REMOTE INTERFACE: RS232/422/485 (FSK Tone Optional).

RF OUTPUT IMPEDANCE: 50 Ohm nominal, unbalanced.

BITE: Fault isolated to module level (LRU), descriptive readout on front panel and individual module indication.

INPUT POWER: AC - 115/230 VAC ±15%, 50/60 Hz; DC +26 VDC ±15%; AC/DC Auto Changeover.

SIZE - INCHES (CM): 5.96H (15.2) X 17.83W (45.4) X 17.66L (44.9).

WEIGHT - POUNDS (KG): DC - 36 (16.3); AC - 49 (22.3).

CONSTRUCTION: Modular plug-in assemblies.

1.4.2 TRANSMITTER SPECIFICATIONS

OUTPUT POWER: Normal Operation - 125 Watts PEP and Average for SSB; 125 Watts CW; 40 Watts Carrier in AM. ISB operation 100 Watts PEP total (25 Watts per channel).

HARMONIC SUPPRESSION: -45 dB second order, -55 dB third and higher orders.

INTERMODULATION DISTORTION: 36 dB below PEP.

CARRIER SUPPRESSION: 50 dB below PEP.

UNDESIRED SIDEBAND: 50 dB below PEP @ 1.5 kHz.

HUM & NOISE LEVEL: 50 dB below PEP.

VSWR: Operates at VSWR 2.0:1 (Automatic power reduction above 2.0:1).

AUDIO INPUT: Microphone auxiliary connector, and two independently selectable 600 ohm lines per sideband at -20 dBm to +10 dBm.

AUTOMATIC LEVEL CONTROL: SSB 125 Watts ±1 dB.
ISB no more then 2 dB change due to modulation in the adjacent sideband.

TRANSMIT GAIN CONTROL: ISB Operation 25 Watts per channel ±1 dB.

AUDIO COMPRESSION: 10 dB nominal (Internal Disable).

1.4.3 ENVIRONMENTAL

TEMPERATURE: -30°C to +50°C.

HUMIDITY: 100% at 50°C.

RAIN: MIL-STD-810D, Method 506.2.

SHOCK: MIL-STD-810D, Method 516.3.

VIBRATION: MIL-STD-810D, Method 514.6.

1.5 HIGH FREQUENCY PROPAGATION

When HF radio is used, a limited amount of communication is accomplished in a direct line. Some radio waves will travel outward from the transmit antenna along the ground (ground wave propagation) but these waves soon lose their strength and are eventually lost. The greater use of HF radio is via Skywave Propagation which, simply stated, is a process of using the ionosphere to bend the radio waves back to earth to arrive at the distant station. To be successful in using the ionosphere in this manner you must:

a) Have a general knowledge of the ionosphere and its affect on radio waves.
b) Select the proper frequency to work in conjunction with the condition of theionosphere.
c) Insure the angle of radiation of the radio waves is correct for the condition of the ionosphere and the distance to the receiving station.

Proper frequency selection is critical for effective communication. To select the proper frequency, consulting any of the available sources of such information as 'IONCAP' would be of great benefit. In the absence of such information, viable paths may be selected by receiver monitoring for calls originating near the destination of interest or by trial and error. For example, a high frequency at night, when the ionosphere is at its weakest, would be too strong and the signal would go completely through the ionosphere and out into space. Too low a frequency during the day, when the ionosphere is the most dense, would create a situation where the signal is so weak the ionosphere would totally absorb the radio waves and nothing would return to earth. The general rule of thumb, then is; higher frequencies in the day, lower frequencies at night.

The angle of radiation or take-off angle of a given antenna is also crucial to effective communication. The distance from where the signal exits the transmit antenna to the point at which it returns to earth depends on the angle it enters the ionosphere. If the angle is HIGH, the distance of the signal will be SHORT. If the angle is LOW, the distance will be FAR. The angle of radiation also presents another problem. Too steep an angle means the area of interaction between radio wave and ionosphere is smaller and the danger of the radio wave going straight through and into space increases. Check the literature of the antenna system in use to be sure the angle of radiation or take off angle is consistent with the distance over which you wish to communicate.

1.6 EQUIPMENT SUPPLIED

The following is a list of equipment, with appropriate Sunair part numbers, supplied with the T-9400 Exciter.

Supplied Equipment:	Sunair Part Numbers:
Exciter, T-9400	8103001295 O.D. 8103001252 GRAY
Hand Held Microphone Assembly	8076000602
Manual	8103000507
Mating Connector Kit	8076000491
Power Cord Assembly, 115VAC or Power Cord Assembly, 230VAC	8076002095 8076002192

1.7 OPTIONS AVAILABLE

The following is a list of optional equipment or accessories available for use with the T-9400 Transceiver.

Optional Equipment/Accessories:	Sunair Model/Part Numbers:
High Stability Reference Oscillator	5024013701
Digital Antenna Coupler, CU-9125	8085000296 O.D. 8085000253 GRAY
Kilowatt Digital Antenna Coupler, 1000 Watt Operation, CU-9100	8104001094 O.D. 8104001051 GRAY
Solid State Kilowatt Amplifier, LPA-9600	8105001098 O.D. 8105001055 GRAY
Remote Control Unit, RCU-9310/T	8078801297 O.D. 8078801254 GRAY
Remote Control Unit (Computer Control), RPC-9286D	8078201001
Headset	0840200005
Headset, with Dynamic Microphone	1012220001
CW Key with Phone Plug	5024000994
Clock	1011190010
Audio Interface Cable	8076004594

Optional Equipment/Accessories:	Sunair Model/Part Numbers:
Desktop Microphone	8076000891
Shockmount Assembly (Mobile Application)	8076002591
Rackmount Kit with Slides	8076004896 O.D. 8076004853 GRAY
Blower Kit	8076006091
Power Cord Assembly, DC	8076002290
Depot Spares Kit , Gray	8103901059
Depot Spares Kit , O. D.	8103901091

THIS PAGE INTENTIONALLY LEFT BLANK.

SECTION II

INSTALLATION

2.1 GENERAL

Section II contains all necessary instructions for the unpacking, inspection, and if necessary, reshipping of damaged equipment or parts. In addition, further information regarding location and mounting considerations, power requirements, antenna and ground system hook-ups and final checkouts after installation is also provided.

2.2 UNPACKING AND INSPECTION

As soon as you have received your unit(s), unpack and inspect all components and accessories. Check the packing list to be sure you have received all items ordered, and that all items necessary for operation have been ordered.

NOTE: Be sure to retain the carton and its associated packing materials should it be necessary to reship damaged equipment.

Do not accept a shipment when there are visible signs of damage to the cartons until a complete inspection is made. If there is a shortage of items or any evidence of damage, insist on a notation to that effect on the shipping papers before signing the receipt from the carrier. If concealed damage is discovered after the shipment has been accepted, notify the carrier immediately in writing and await his inspection before making any disposition of the shipment. A full report of the damage should also be forwarded to Sunairs Product Services Department. Please be sure to include the following information for prompt service:

a) ORDER NUMBER.
b) MODEL AND SERIAL NUMBER.
c) NAME OF TRANSPORTATION AGENCY.
d) APPLICABLE DATES.

Upon receipt of this information arrangements will be made, by Sunair, for repair or replacement.

2.3 RETURN OF EQUIPMENT TO FACTORY

The shipping carton for the T-9400 has been designed to protect the equipment during shipment. The container and its associated packing materials should be used to reship the unit. When necessary to return equipment to Sunair for warranty or non-warranty repair, an authorization number is required. This number can be obtained from our Product Services Department: TELEPHONE: (305) 525-1505, TELEX: 51-4443, CABLE SUNAIR, FACSIMILE: (305) 765-1322.

If the original shipping carton is not available, be sure to carefully pack each unit separately, using suitable cushioning material where necessary. Very special attention should be given to providing enough packing material around connectors and other protrusions from the unit. Rigid cardboard should be placed at the corners of the equipment to protect against denting. DO NOT USE DUNNAGE (STYROFOAM PEANUTS) FOR PACKING PROTECTION, they may allow the unit to shift while being shipped, and, therefore, become damaged.

When returning subassemblies or components for repair or replacement, be sure to pack each separately, using suitable cushioning material.

Shipment to be made PREPAID consigned to:

Sunair Electronics, Inc.
Product Services Department
3101 SW Third Avenue
Fort Lauderdale, Florida 33315-3389
U.S.A.

Plainly mark with indelible ink all mailing documents as follows:

US Goods Returned For Repair
Value For Customs - $(Amount)

Mark ALL SIDES of the package:

FRAGILE - ELECTRONIC EQUIPMENT!

NOTE: Before shipping, carefully inspect the package to be sure it is marked properly and is securely wrapped.

2.4 GENERAL INSTALLATION AND MOUNTING INFORMATION

Satisfactory operation of this equipment will depend upon the care and thoroughness taken during installation.

2.4.1 GENERAL INSTALLATION

For installation and use with KW equipment, modems, and other peripherals. Use this manual in conjunction with their respective operating manuals for complete installation information.

a) Carefully plan exciter/peripherals/coupler/antenna locations, observing the following requirements before starting installation.

b) Provide best possible RF ground for exciter and coupler. Use flat copper strap 1" wide or No. 6 or larger wire and connect to ground terminal at rear of exciter. Leads to ground system should be as short as possible.

c) Provide separation between coupler output and exciter with its associated wiring. Coupler may be mounted up to 100 feet from exciter if RG58 RF coax cable is use, or further if RG8 RF coax cable is used.

d) Antenna lead from coupler to antenna must be insulated for at least 10 kV potential. The lead should run parallel to metal fittings or other metal objects that are bonded to the system ground. The coupler should be as close to the antenna as possible, and never more than three (3) feet distant as this will decrease antenna efficiency.

e) If the equipment is installed on a wood or fiberglass boat, approximately ten (10) to twelve (12) square feet of metal surface area in contact with the water should be provided for use as an RF ground.

f) If operated on DC power, check for correct polarity before applying power.

NOTE: Linear amplifiers with low level drive such as used in the T-9400 will oscillate if the RF power output is radiated or conducted into the low level stages. Evidence of this situation is erratic or excessive power output. This is caused by close proximity of the coupler output and antenna to the transmitter and/or inadequate RF grounds. Carefully following the above procedures will prevent this from occurring.

Connection of the T-9400 to power sources, antennas, antenna couplers and other equipment may be accomplished as follows:

TO ADD	CONNECT	NOTE
AC Power	AC source to J1 on rear panel.	See Figure 2.4.1.1.
DC Power (DC Power Cable optional)	DC source to J3 on rear panel.	See Figure 2.4.1.1.
Antenna	Antenna to J4 on rear panel.	Only if antenna coupler not required.
CW Key	Key to J1 on front panel.	See Figure 2.4.1.1.
Microphone or optional Headset	Microphone or optional Headset to J3 on front panel.	See Figure 2.4.1.1.
Headphones	Headphones to J2 on front panel.	See Figure 2.4.1.1.
Antenna Coupler (CU-9125)	Antenna coupler control line from J1 (CU-9125) to accessory connector J6 on rear panel of the T-9400. Coaxial signal line from J2 (CU-9125) to antenna connector J4 on rear panel of the T-9400.	See Figure 2.4.1.1 and consult CU-9125 Manual (Figures 2.2 and 2.8).
Power Amplifier (LPA-9600)	LPA control lines from J5 (LPA-9600) to accessory connector J6 on the rear panel of the T-9400. Coaxial signal line from J2 (LPA-9600) to antenna connector J4 on rear panel of the T-9400.	See Figure 2.4.1.1 and consult LPA-9600 Manual (Figure 2.1).
External Data Modems (Direct Connection T-9400)	Connect modem audio and keyline to T-9400 through audio connector J5 on the rear panel of the T-9400.	See Figure 2.4.1.1 and 2.4.1.2.
Remote Control (RCU-9310/T)	Control lines from J6 (RCU-9310/T) to remote connector J8 on the rear panel of the T-9400. Audio lines from J4 (RCU-9310/T) to audio connector J5 on rear panel of the T-9400.	See Figure 2.4.1.1 and consult RCU-9310/T Manual.
Remote Control (RPC-9286)	Control lines from J2 (RPC-9286) to remote connector J8 on the rear panel of the T-9400. Signal line from J3 (RPC-9286) to audio connector J5 on rear panel of the T-9400.	See Figure 2.4.1.1 and consult RPC-9286 Manual.

2.4.2 BASE STATION INSTALLATION

The T-9400 is equipped with rubber feet so that it can be placed directly on a table, desk or similar flat surface. The front feet are taller then the rear feet to tilt the exciter at a convenient operating angle. Minimum clearance of one (1) inch at the sides and two (2) inches at the rear and top should be allowed to provide for adequate cooling of the rear panel heat sinks. If extended periods of RTTY transmission are anticipated, forced air cooling of the heat sinks is recommended. Figure 2.4.1.1 shows the applicable outline dimensions of the equipment and the location of imputs and outputs for microphones, antennas, antenna couplers, remote controls, signal lines, and modems.

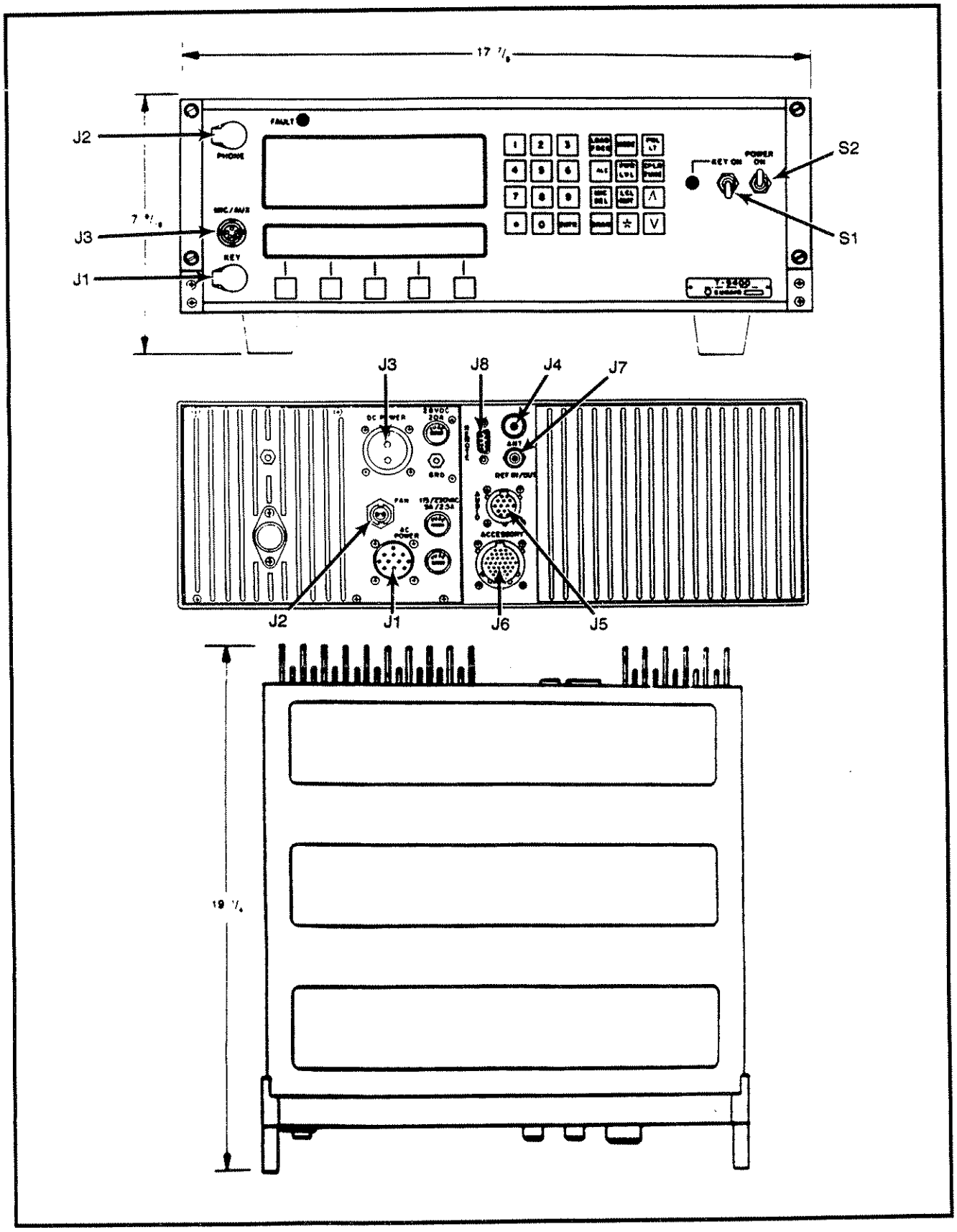

Figure 2.4.1.1 T-9400 Outline Dimensions.

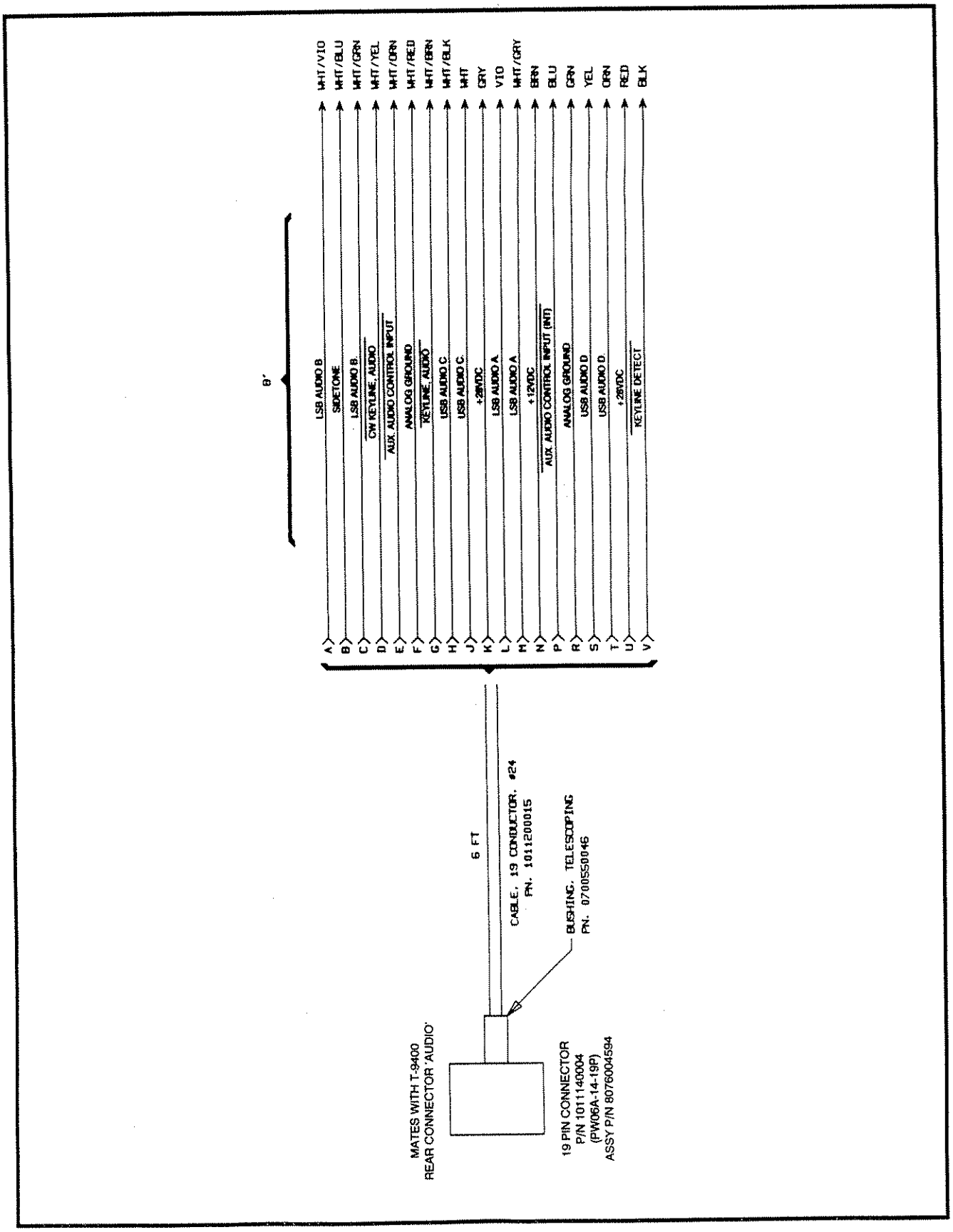

Figure 2.4.1.2 Cable Assembly, T-9400 Audio Interface.

2.4.3 VEHICULAR INSTALLATIONS

The T-9400 Shockmount Assembly (Sunair p/n 8076002591) is designed to mount the exciter in vehicular/mobile installations. Figure 2.4.3.1 gives the applicable outline dimensions for the T-9400 coupled with the shockmount.

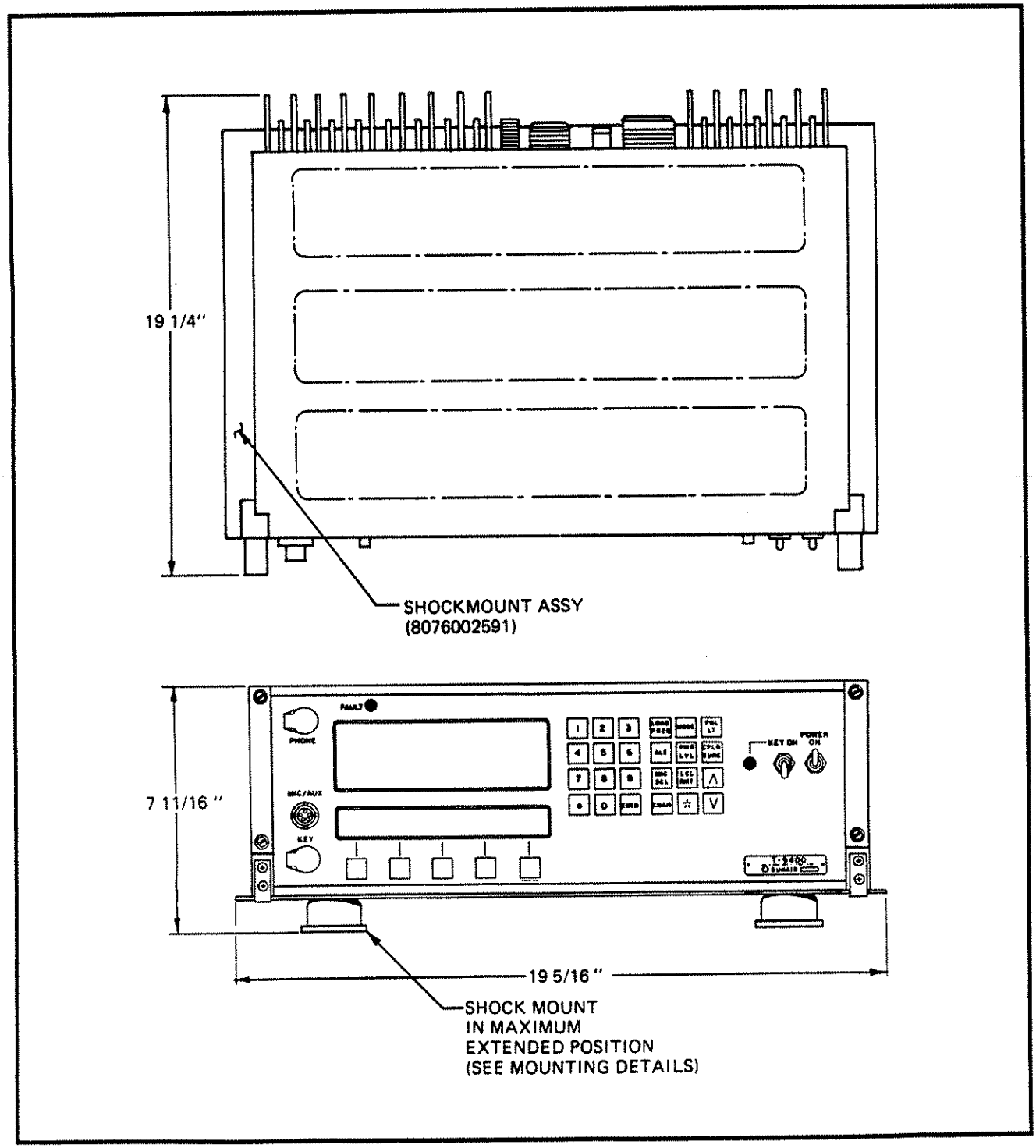

Figure 2.4.3.1 Outline Dimensions of T-9400 with Shockmount.

In order to minimize RF pickup, it is important that the ground strap supplied with the shockmount be securely fastened between the ground post on the equipment and the bottom of the right rear shock isolator (see detail in Figure 2.4.3.2). It is also important to ground the antenna coupler to the frame of the vehicle by the shortest possible path.

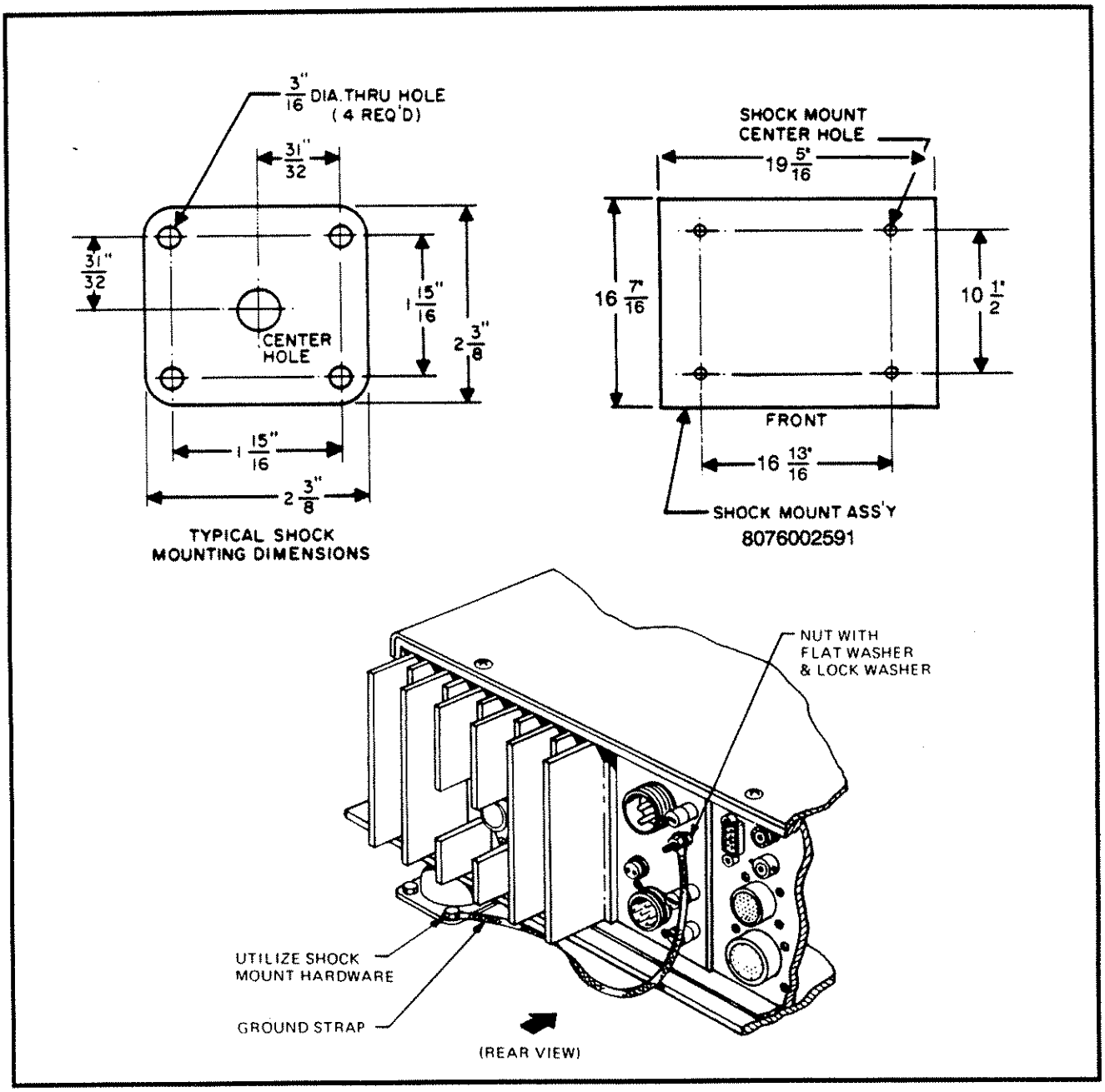

Figure 2.4.3.2 Grounding of T-9400 to Shockmount.

2.4.4 MARINE INSTALLATIONS

In marine installations, follow the same recommendations as outlined in paragraph 2.4.3. If the equipment is installed on a wood or fiberglass boat, a ground plate of twelve (12) square feet minimum area in contact with the water should be installed. A heavy ground lead such as a one inch (1") wide strap or braid should be connected between the ground post on the equipment and the ground plate. The length of this ground lead should be held to an absolute minimum commensurate with a neat installation.

2.4.5 RACK INSTALLATIONS

The exciter may be conveniently mounted in a standard nineteen inch (19") rack using the Rackmount Kit (Sunair p/n 8076004853[Grey] or 8076004896[OD]). The kit includes rack slides, associated hardware and filler panels. The exciter, in the rack mounted configuration, requires a standard panel space of seven inches (7") high. Refer to Figure 2.4.5.1 for assembly details.

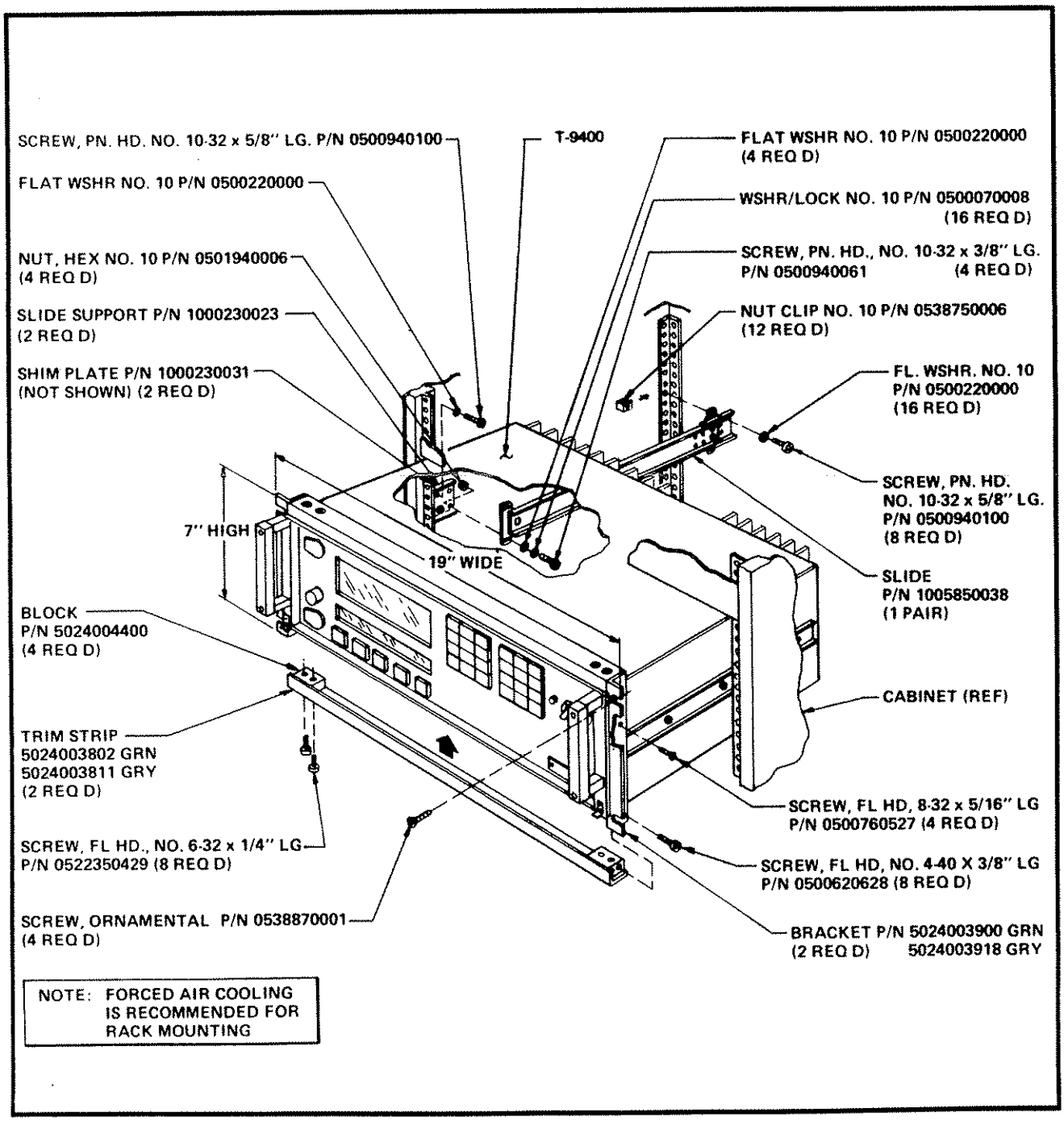

Figure 2.4.5.1 Installation of T-9400 in Equipment Rack.

2.5 ANTENNAS AND GROUND SYSTEMS

2.5.1 GENERAL

The T-9400 is designed to operate into a 50 ohm resistive antenna system with a maximum Voltage Standing Wave Ratio (VSWR) of 2:1. When used with the CU-9125 Digital Antenna Coupler, the system will match antennas ranging from sixteen (16) foot whips to 150 foot long wires. The coupler will also efficiently match nine (9) foot whip antennas at frequencies above 4 MHz.

As there are numerous types of antennas, a complete discussion is beyond the scope of this manual. Antennas for use in the 1.6 to 30 MHz spectrum generally fall into three of the following categories:

a) Narrow Band 50 ohm Antennas.
b) Random Length Non-Resonant Antennas.
c) Broad Band 50 ohm Antennas.

NOTE: Some general 'DOs' and 'DONTs' of antenna installation are:

a) The antenna should be clear of all large objects such as trees, buildings and power lines.
b) Although the CU-9125 Digital Antenna Coupler will match electrically short antennas (i.e. those under 1/8 wavelength), such antennas are not efficient radiators. If the installation permits, antennas over 1/8 wavelength long at the lowest operating frequency should be used. Antenna length generally limits system performance in vehicular applications at frequencies below four (4) MHz as proper size would be innapropriate for the vehicle.
c) When using whip antennas, the ground system actually forms part of the radiating system. Where space permits (such as in a base station installation) a good ground plan or radial system should be installed at the base of the antenna.

NOTE: An inadequate ground system is most often responsible for disappointing performance when using a whip antenna.

d) In vehicular installations and marine installations in a metal hull ship, one inch (1") wide strap or braid should be connected between the antenna coupler ground and the frame of the vehicle. The length should be as short as possible. In an installation aboard a wood or fiberglass boat, a ground plate with at least 12 square feet in contact with the water should be attached to the hull and a short, 1 inch wide strap should be connected between the coupler ground post and the plate. As previously mentioned this ground lead should be as short as possible.

2.5.2 NARROW BAND 50 OHM ANTENNAS

Typical of this type of antenna are the Doublet and the Inverted V. Both types of antennas may be assembled from the Sunair Doublet Antenna Kit (p/n 0996240004). Their operation is efficient for only a narrow band of frequencies within approximately 1 1/2% of their center frequency. The antenna coupler is NOT generally required if the frequency span of the antenna is not exceeded. Both antennas exhibit somewhat directional characteristics. The direction of maximum radiation is perpendicular to the antenna wire. The inverted V antenna is particularly suitable for communication with nearby mobile stations (with vertical antennas) since a portion of the radiation is in a vertical direction.

2.5.3 RANDOM LENGTH NON-RESONANT ANTENNAS

Whips and longwires are popular non-resonant antennas. The whip antenna is often used in mobile, marine, portable or semi-portable installations because it is rugged and self-supporting. The antenna impedance is strongly dependent on the operating frequency, therefore, an antenna coupler MUST BE used to match the antenna to the transceiver. Best radiation efficiency will be obtained if the antenna is at least 1/8 wavelength

long at the lowest operating frequency; however, this requirement does not result in a practical size antenna for low frequency operation. Thirty-five foot (35') whip antennas offer a good compromise between practical height and good electrical performance at low frequencies. The CU-9125 Digital Antenna Coupler is designed to efficiently match whip antennas of 16 foot length or greater. An efficient match may also be obtained for a 9 foot whip above 4 MHz. The whip's performance is greatly influenced by its ground system. For temporary base station installations, a minimum of four (4), six foot (6') long ground rods should be driven into the ground symmetrically placed around the antenna base. The rods should be bonded together with heavy strap and then connected to the antenna coupler ground by another short heavy strap. If the antenna is mounted on the roof of a building, where a short ground lead to the coupler cannot be obtained, a minimum of four (4) symmetrically placed ground radials should be installed at the base of the antenna, bonded together, and connected to the antenna coupler ground post. The radials should be made of number 12 gauge wire or larger and should be at least 1/4 wave long at the lowest operating frequency. The radiation pattern is omnidirectional in the horizontal plane.

The longwire antenna, is a popular base station antenna where a wide range of operating frequencies are used. The antenna impedance varies greatly with frequency and, therefore, MUST BE matched to the transceiver with an antenna coupler. The CU-9125 will efficiently match longwire antennas up to 150 feet in length. The radiation pattern of the longwire antenna is also a function of the operating frequency. The two most popular length longwire antennas, 75 and 150 feet (Sunair p/n's 0999200003 and 099210009), exhibit excellent low frequency radiation efficiency.

2.5.4 BROADBAND 50 OHM ANTENNAS

These are generally complex, expensive antennas requiring a large area for installation. Their use is usually limited to high performance base station installations which must operate at an extended frequency range. As this class of antennas has approximately 50 ohm output impedance over the rated band of frequencies, an antenna coupler is NOT required.

Some common examples are:

a) Discone (a vertical antenna with an omni-directional pattern)

b) Log Periodic (a broadband antenna with a directional pattern), this antenna is often made in a rotatable configuration.

Consult Sunair's Marketing and Product Services Departments for specific recommendations.

SECTION III

OPERATION

3.1 GENERAL

This section provides the operator with the location and use of the T-9400 front panel controls for proper utilization of the equipment. For convenience of discussion, functions are addressed in normal sequence. However, it is not necessary to observe this order once the user becomes familiar with the equipment. Any setting may be changed independently by referring to the appropriate section in this chapter pertaining to the function in question. Reference to Figure 3.1.1 below, shows the location of the control groupings, displays, and their general purpose.

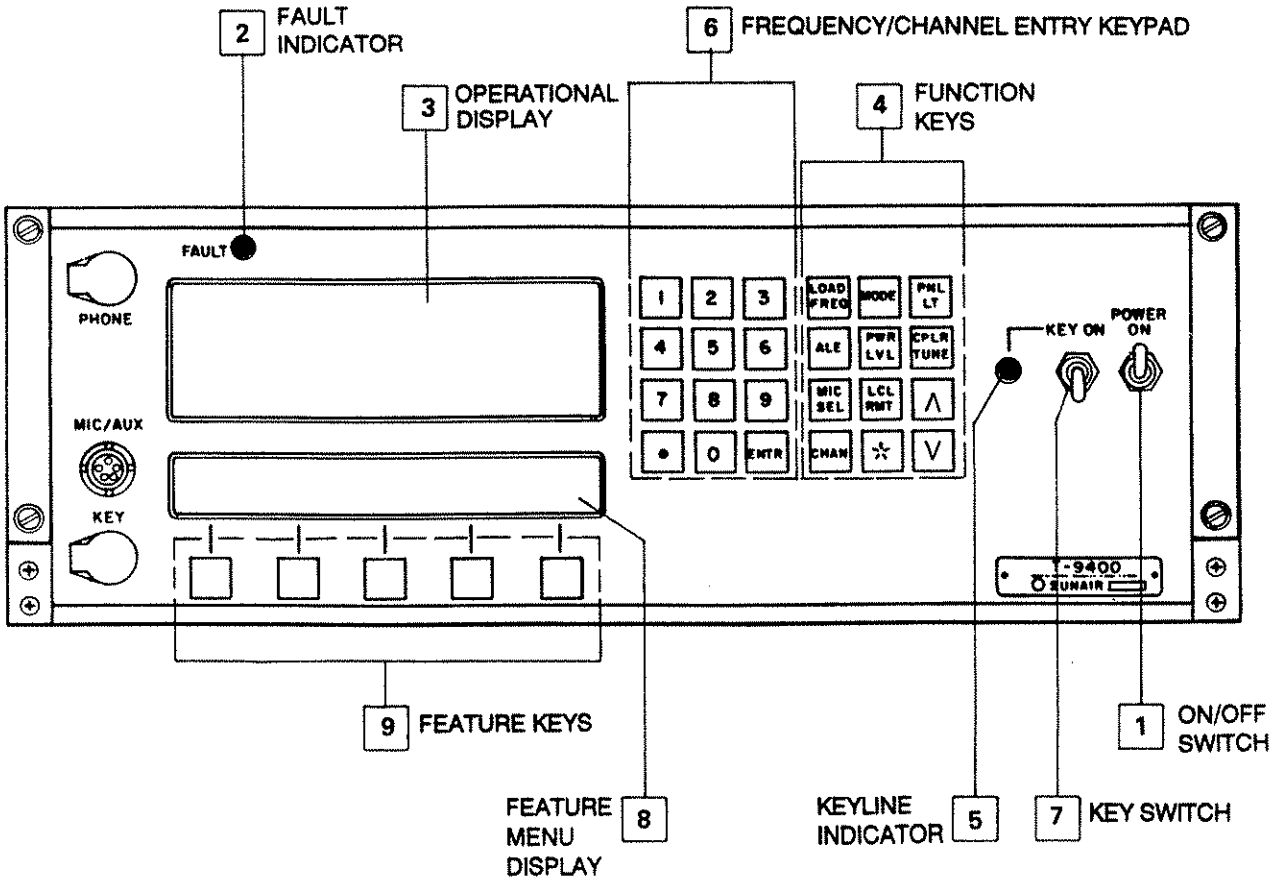

Figure 3.1.1 Front Panel Controls for the T-9400.

1 ON/OFF CONTROL

Push the switch to the upward position.

2 FAULT INDICATOR

If at any time this red indicator is lit, there is a fault in the radio. Please check the installation and proceed to the section on BITE, located in section 3.3.1 of this manual.

3 OPERATIONAL DISPLAY

This liquid Crystal Display (LCD), provides a variety of information required to operate the equipment. Information will appear in four (4) primary areas of the screen as indicated in Figure 3.1.2.

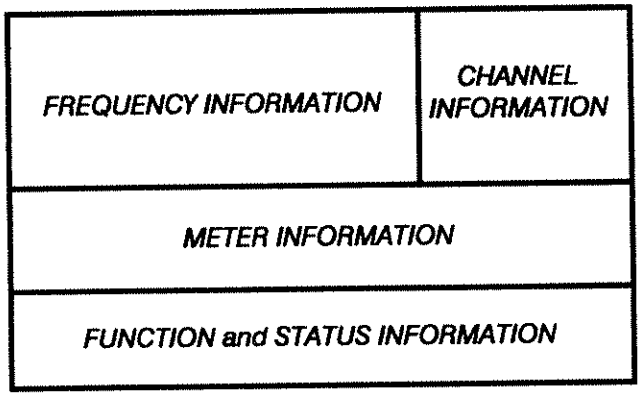

Figure 3.1.2 Operational Display Information Location.

4 FUNCTION KEYS

This grouping of twelve (12) keys is used to control or establish the primary operating functions of the equipment such as mode selection, channel selection, channel loading, microphone select, local/remote operation, power output level selection, panel illumination, and coupler tune command.

5 KEYLINE INDICATOR

When illuminated, the exciter is in the keyed condition.

6 FREQUENCY/CHANNEL ENTRY KEYS

This group of twelve (12) numeric keys is used for entry of frequency or channel information, either to establish a particular operating frequency or load frequency information into channel storage for later recall.

7 KEY SWITCH

When set in the 'UP' position, the exciter is permanently keyed 'ON'.

8 FEATURE MENU DISPLAY

This display provides names or functions for the five (5) keys located directly below the display. In most cases, this display will automatically indicate the appropriate selections based upon the condition of other equipment settings. The menu may be changed at will, however, by depression of the fifth key located under 'MORE'.

9 FEATURE KEYS

This grouping of five (5) 'SOFT' keys will enable the various functions indicated in the display located directly above the key.

NOTE: An asterisk (*) appearing in the display indicates that the feature preceding it is enabled or 'ON'.

Utilization of the controls of the T-9400 Exciter can be divided into two (2) categories:

A. Primary Operations (Section 3.2)

B. Equipment Set-Up (Section 3.3)

3.2 PRIMARY OPERATIONS

3.2.1 EXCITER SET UP FOR MODE, MIC AND TRANSMIT POWER

Turn the equipment on (1), and refer to Figure 3.2.1.1. The operational display should appear as indicated in the figure except that specific frequencies and modes will reflect the condition of the equipment when last used. Depress 'MODE' key (2), to select the desired mode of transmission as indicated in the display segment at (3). Choices are USB, LSB, ISB, CW, and AM.

Depress MIC key (4), to select MIC connection, which will be indicated in the display segment at (5). Choices are 'ON' (U or L) or 'OFF' (O) for each sideband.

Exciter power output (6) is indicated in this segment of the operational display and will normally read '125W' (Watts). If '65W' (Watts) is desired, then depressing the 'PWR LVL' (Power Level) Key (7) will condition the exciter accordingly.

NOTE: ISB operation 'PWR LVL' will normally read '100W' (Watts). If '50W' (Watts) is desired then depressing the 'PWR LVL' key (7) will condition the exciter accordingly.

NOTE: Since the T-9400 is frequently used with a one kilowatt Linear Power Amplifier (LPA), provisions have been made in the system for adjustment to the '1000W' (Watt) and '500W' (Watt) levels as well, if the LPA is connected to the output of the exciter.

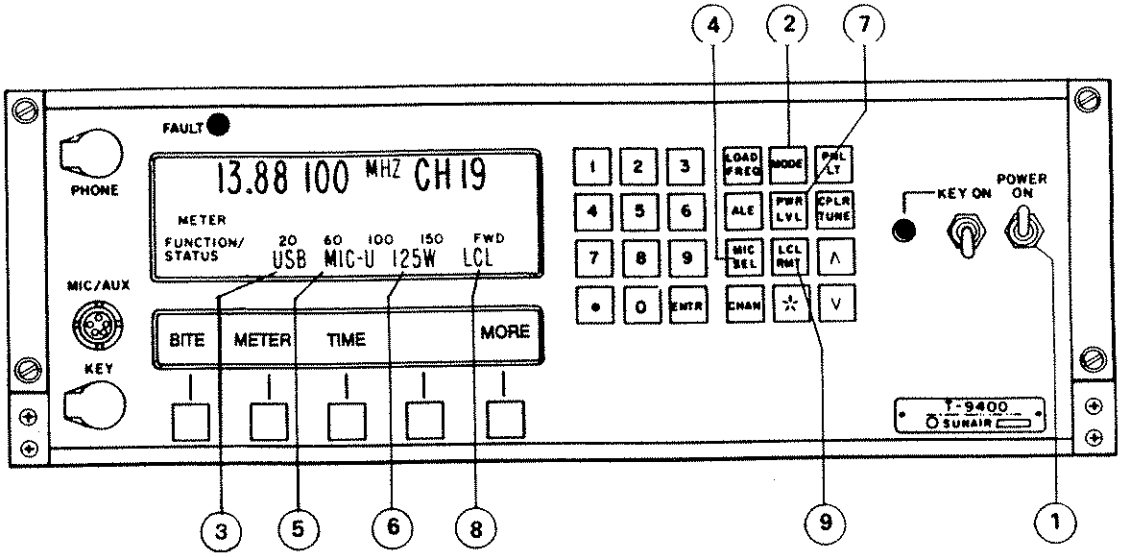

Figure 3.2.1.1 Exciter Display Screens.

This section of the operational display indicates the point of control of the exciter and should read 'LCL' (Local) (8) unless a remote unit is connected to the exciter and presently has control - in which case the display will read 'RMT' (Remote). To change control back to the exciter simply depress the 'LCL/RMT' (Local/Remote) key (9).

NOTE: If the exciter is not connected to remote control equipment the display should always read 'LCL' and depression of the 'LCL/RMT' key will produce the message:

'NO REMOTE SYSTEM'

on the display. (Also see section 3.3.4.)

THE BASIC FUNCTIONAL PARAMETERS OF THE EXCITER HAVE NOW BEEN ESTABLISHED.

3.2.2 ESTABLISHING AN OPERATING FREQUENCY

If channel display (1) does not indicate the desired frequency at (4), refer to Figure 3.2.2.1, then depress 'LOAD FREQ' key (2). Depression of the 'LOAD FREQ' key, will blank the operational display frequency screen located at (4), and change feature display to provide 'ERASE' and 'END' functions.

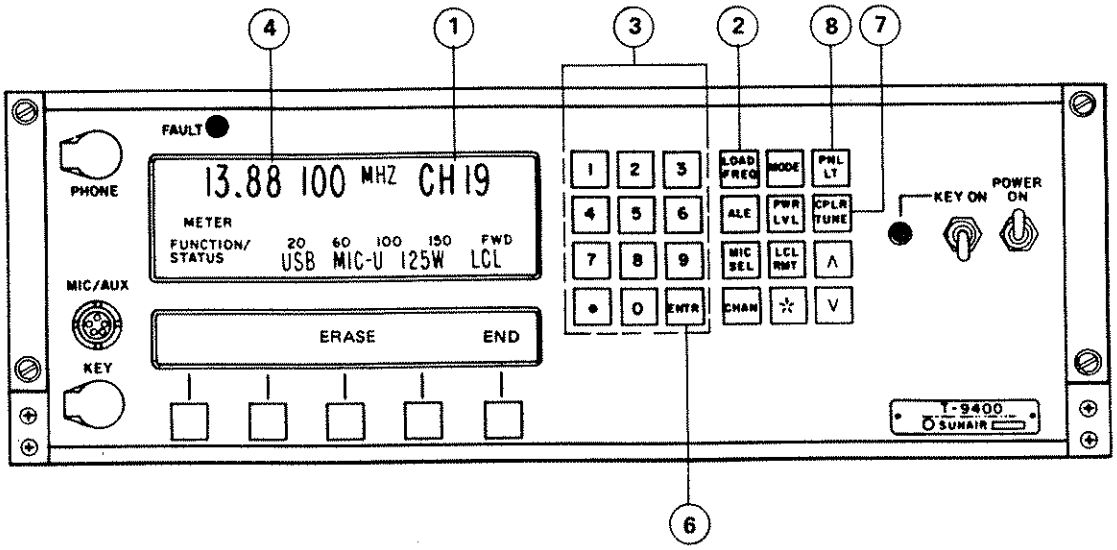

Figure 3.2.2.1 T-9400 Operating Controls.

The numeric keypad, (3), may now be used to enter any operational frequency by entering seven (7) digits. (For frequencies less than 10 MHz, the first digit entered must be '0'). The numbers being entered will appear on the display at 4 , in the order of entry from left to right. When seven (7) digits have been entered depress the 'ENTER' key, (6) , to activate the exciter.

THE EXCITER IS NOW OPERATIONAL ON THE FREQUENCY SELECTED

NOTE: If an error is made in entering a frequency, simply depress the 'LOAD FREQ' key to clear the screen and repeat the procedure.

NOTE: If a frequency below 1.6 MHz is entered, the frequency will flash on and off and the message:

'ILLEGAL XMIT FREQ'

will appear on the status screen.

If the exciter output is terminated in a Broadband Antenna, or is feeding a Linear Power Amplifier such as the LPA 9600, whose termination is a Broadband Antenna, transmitter tuning occurs automatically and:

THE EXCITER IS NOW FULLY OPERATIONAL.

3.2.3 ANTENNA COUPLER TUNING

Once an operating frequency has been selected, as described in Section 3.2.2, the transmitter is automatically tuned. If the exciter output is fed to an antenna coupler (such as the CU-9125), or is connected to a Linear Power Amplifier that in turn feeds an antenna coupler (such as the CU-9100), depression of the 'CPLR TUNE' key, located at (7), in Figure 3.2.2.1 will initiate the tune cycle. During this time (a few seconds or less), the message:

'COUPLER TUNING'

will appear on the Status Display Screen. When coupler tuning has been completed, the message:

'SYSTEM READY'

will appear on the Status Display Screen.

THE EXCITER IS NOW FULLY OPERATIONAL.

NOTE: If there is no antenna coupler in the system, depression of the 'CPLR TUNE' key will produce the message:

'NO ANTENNA COUPLER'

on the Operational Display Screen.

NOTE: If the coupler is unable to tune the antenna within 10 seconds, the message:

'SYSTEM FAULT'

will appear on the Status Display Screen. If this occurs, check the installation and the antenna. If all appears in order, proceed to the troubleshooting section of the coupler manual.

NOTE: If the coupler remains in the tune mode for longer than 10 seconds the message:

'COUPLER FAULT'

will appear on the Status Display Screen. If this occurs, proceed to the troubleshooting section of the coupler manual.

3.2.4 PANEL LIGHTING

Both the 'Operational' and 'Feature' display screens may be illuminated by depressing the 'PNL LT' key located at (8) in Figure 3.2.2.1. A second depression will turn the lighting off.

3.2.5 OPERATING WITH PRE-SET CHANNELS

Operation using pre-set channel frequencies can only be accomplished if the desired frequencies have been entered into the memory of the exciter. If this has not been accomplished refer to Section 3.2 prior to proceeding.

Turn the equipment on (1), and refer to Figure 3.2.5.1.

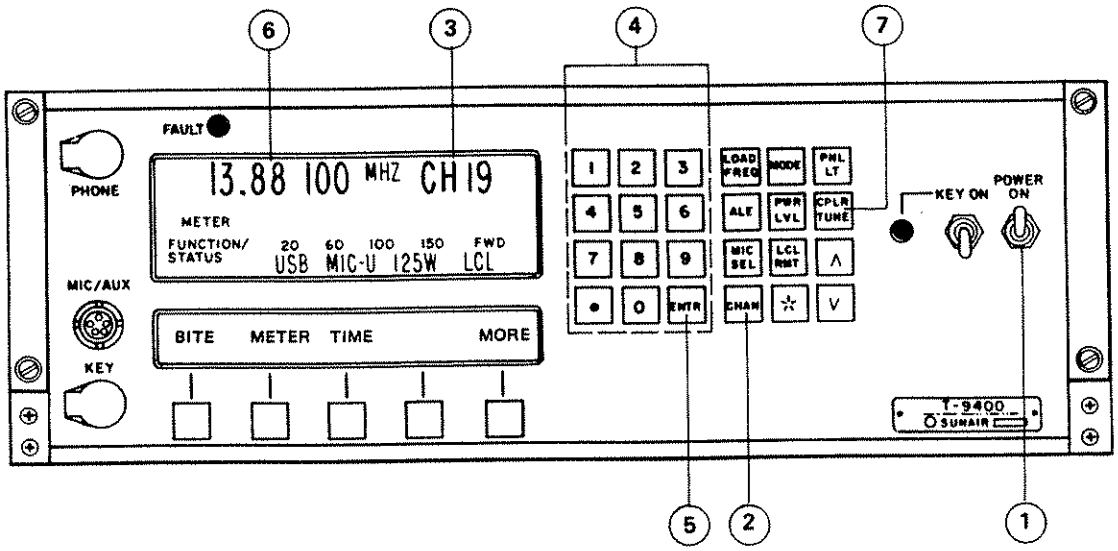

Figure 3.2.5.1 T-9400 Operating Controls.

Depress the 'CHAN' (Channel) key (2) to blank the channel number appearing at (3).

Enter any channel number from 00-127 using the numeric keypad (4). The number entered will be shown on the display at (3).

Depress the 'ENTER' key (5). The exciter operating frequency stored for the channel entered will now appear on the display at (6).

If present, the system coupler may now be tuned by depressing the 'CPLR TUNE' key (7). See Section 3.2.3 for more detailed instructions.

THE SYSTEM IS NOW FULLY OPERATIONAL ON THE CHANNEL SELECTED.

3.2.6 MANUAL CHANNEL SCANNING

Once the equipment is in the pre-set mode of operation, as outlined in section 3.2.7, all of the channels programmed may be viewed and/or used by depressing the channel up ' Λ ' key (1) or the channel down ' V ' key (2) . (Refer to Figure 3.2.6.1.)

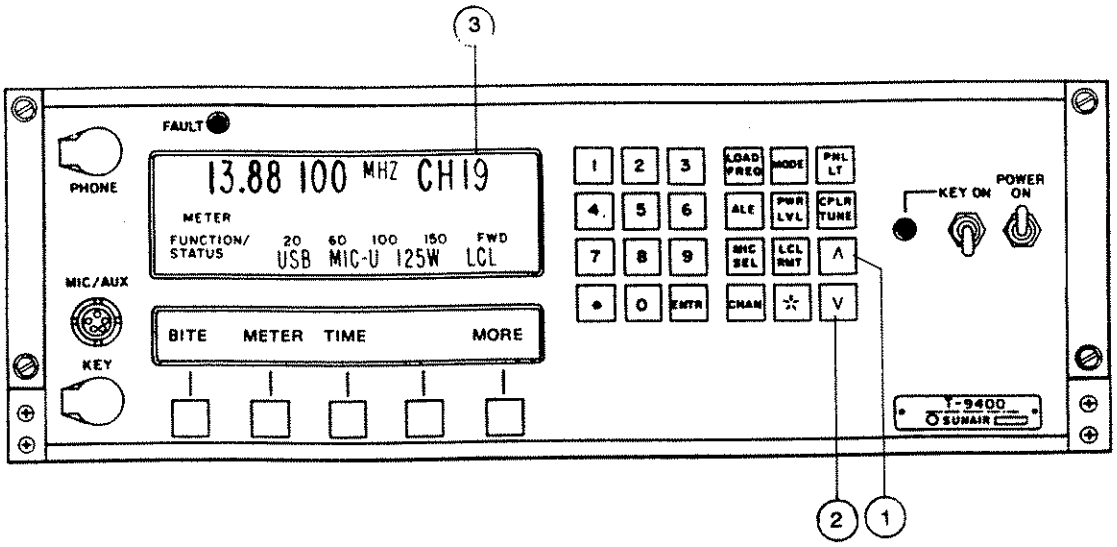

Figure 3.2.6.1 T-9400 Manual Channel Scanning Controls.

Each depression of the ' Λ ' key (1) will increase the channel displayed at (3) by one (1); depressing the ' V ' key (2) will decrease the channel displayed at (3) by one (1).

3.2.7 LOADING PRE-SET CHANNEL FREQUENCIES

The T-9400 is capable of storing operating information on 128 pre- set channels (numbers 00-127) for later re-call and use. For each channel the operating information to be stored consists of:

A. Transmit Frequency,
B. Mode of Emission,
C. Power Level.

The following procedure, referring to Figure 3.2.7.1, should be followed to enable proper loading of channels.

Turn the exciter on (1) and depress the 'CHAN' (Channel) key, (2) . The operational display screen will now read 'CH' at (3) and blank at (4) .

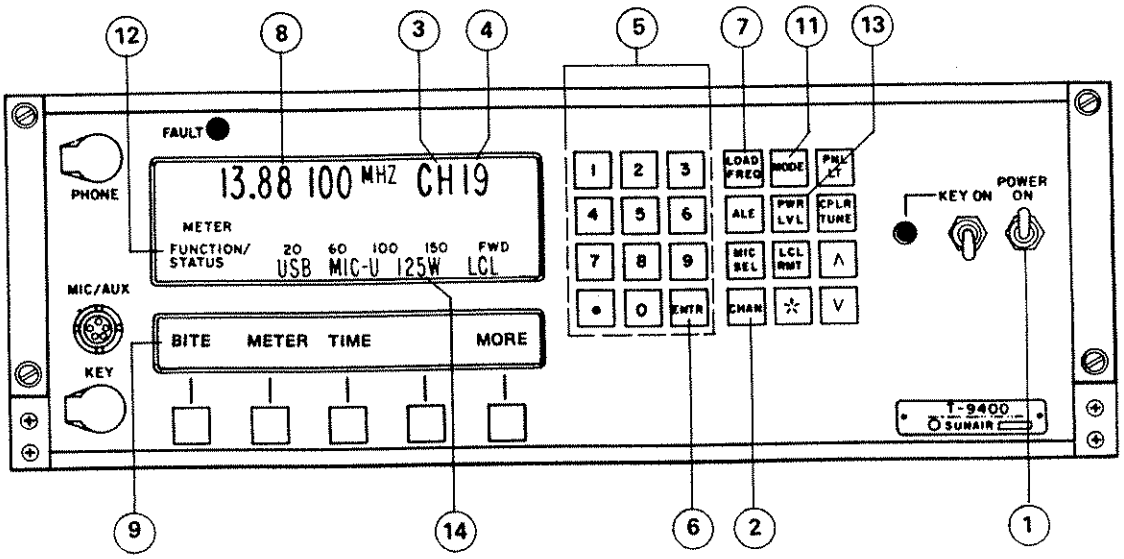

Figure 3.2.7.1 T-9400 Channel Loading Controls.

Use the numeric keypad (5) to enter the channel number. Enter a '0' first for a number less than 10. Depress the 'ENTER' key, (6). The channel number to be programmed will now appear at (4).

Once the desired channel number has been selected, operational information may be entered as follows:

A. To load the Exciter Frequency depress the 'LOAD FREQ' key (7). The frequency display at (8) will now be blank.

   Enter the desired operating, frequency (Seven [7] digits are required. Enter '0' first if frequency is less than 10 MHz.) using the numeric keypad (5). The entered frequency will appear in order of digit entry (left to right) on the operational display screen at (8).

NOTE: When the 'LOAD FREQ' key is depressed, the equipment feature display (9) will change to provide an 'ERASE' function at (10) . As shown in Figure 3.2.7.2. Depression of this key will erase the numeric frequency entry, one digit at a time, beginning with the last digit entered (right to left). When the desired digits are blanked, simply resume keypad entry of frequency. Do not depress 'END' key (15) unless you desire to abort frequency loading and have the channel revert to its original stored information.

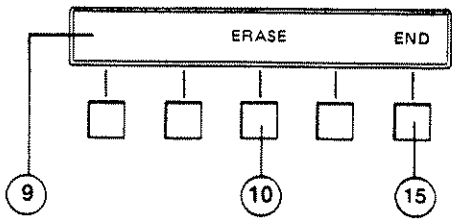

Figure 3.2.7.2 T-9400 Feature Display.

Once the desired frequency has been entered, depress the 'ENTER' key (6) to store the information.

B. To load Mode of Emission, depress the 'MODE' key (11) successively until the desired mode appears on the function display at (12) . Choices are: 'USB', 'LSB', 'ISB', 'CW', and 'AM'. Depress 'ENTER' key (6) .

NOTE: If 'CW' is selected as a mode of emission, key release time is automatically established by default to medium. Other choices are available and are covered in Section 3.3.8 of this manual.

C. To load Power Level depress 'PWR LVL' key (13) successively until desired power level appears on function display at (14) . Choices are '125W' or '65W' SSB. '100W' or '50W' ISB operation. Depress 'ENTER' key (6) .

All of the storage data for this channel has now been entered and the exciter is fully operational on this channel. Additional channels may be loaded by simply repeating this process.

3.3 EQUIPMENT SET-UP

This section addresses those features and functions that are either of secondary operational importance or need be accomplished only infrequently, usually at the time of commissioning.

3.3.1 BITE (Built In Test Equipment)

The T-9400 is equipped with sufficient self-diagnostics to permit the operator to assure himself that all internal subassemblies (LRUs) are functioning correctly or, in the case of malfunction, which specific LRU(s) are faulty. This program may be accessed independent of any prior established modes of operation.

Depress the Feature Menu 'MORE' key **1** successively until the Feature Menu shown in Figure 3.3.1.1 is indicated on the Feature Menu Display **2** .

Depress the 'BITE' key **3** . The equipment will initiate a self test routine of all common modules and will display the results at Function/Status **4** of the Operational Display. The initial message will be:

'BITE IN PROGRESS'.

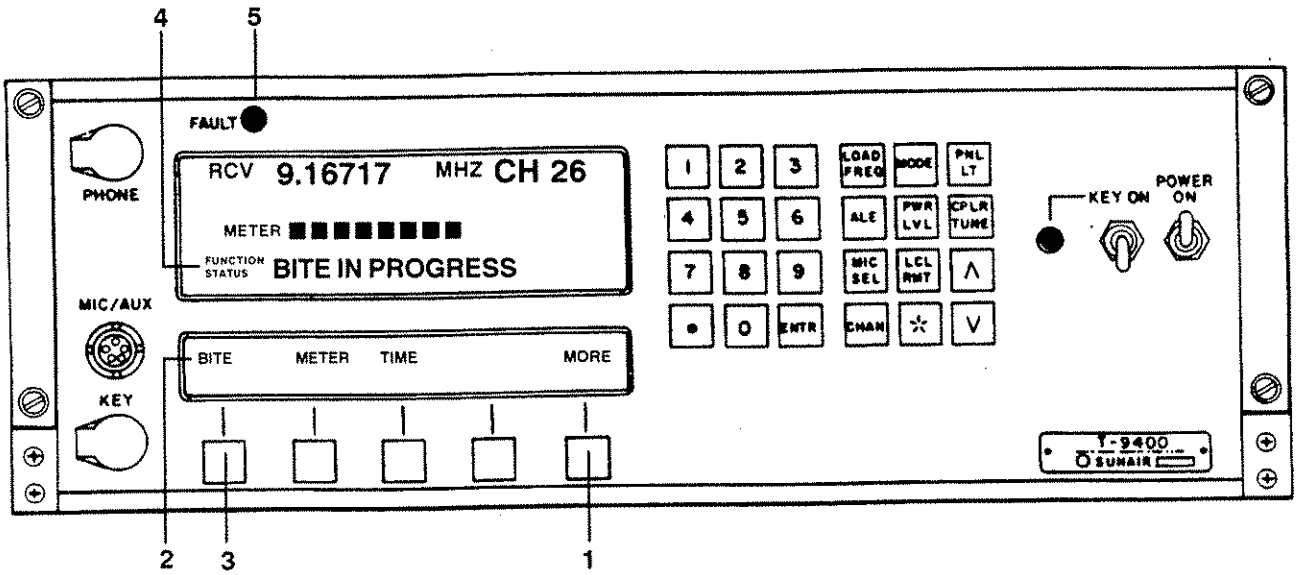

Figure 3.3.1.1 The T-9400's Operational and Feature Menu Displays.

As each common module is tested a corresponding message will appear briefly on the Operational Display in the following order:

'FRONT PANEL O.K.'	*or*	'FRONT PANEL FAULT'
'CPU O.K.'	*or*	'CPU FAULT'
'SYNTHESIZER O.K.'	*or*	'SYNTHESIZER FAULT'
'POWER SUPPLY O.K.'	*or*	'POWER SUPPLY FAULT'
'I/O O.K.'	*or*	'I/O FAULT'

NOTE: Display 'I/O O.K.' or 'I/O FAULT' will only be displayed if I/O function is selected, and connected to the Remote Control, See Section 3.3.7.

NOTE: If any of the above faults are detected the self test is stopped at that fault and displayed at **4** , the Fault LED at **5** will also be lit. Proceed to Section V of this manual for fault isolation and repair.

NOTE: If a 'SYNTHESIZER FAULT' is displayed, it is a real time fault and will be the prime fault. You will be unable to have 'BITE IN PROGRESS' displayed. Proceed to Section V of this manual for fault isolation and repair.

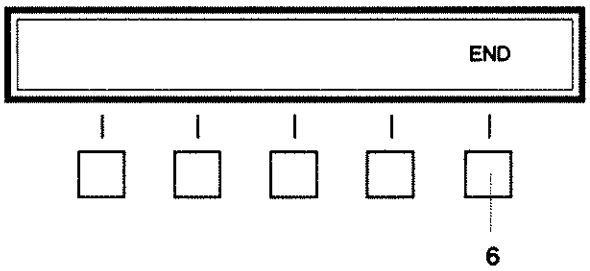

Figure 3.3.1.2 BITE Sub-Menu

Frequency displayed will step through the following test frequencies: 1.75, 2.75, 3.75, 5.75, 7.75, 10.75, 16.75 and 25.75 MHz. Frequency will step back to 1.75 MHz and Operational Display will step through:

'BITE IN PROGRESS'

'AUDIO O.K.'	*or*	'AUDIO FAULT'
'IF O.K.'	*or*	'IF FAULT'
'FRONT END O.K.'	*or*	'FRONT END FAULT'
'POWER AMPL O.K.'	*or*	'POWER AMPL FAULT'
'FILTER MODULE O.K.'	*or*	'FILTER MODULE FAULT'

The filter module is first checked at 1.75 MHz, then is stepped through above test frequencies.

At the conclusion of a valid 'BITE' test, the message:

'TEST COMPLETED'

will appear on the Operational Display. To return to normal operation you <u>must</u> <u>Depress 'END' key</u> **6** See Figure 3.3.1.2.

NOTE: If a fault is detected, the test is stopped at that fault, and displayed at **4** and **5**. See Section V of this manual for fault isolation and repair.

NOTE: If the T-9400 is connected to a 50 ohm antenna the following faults may also be displayed.

'HI VSWR AT XXXX MHZ'

This message is displayed if Bite detected a High VSWR from the antenna system at any one of the test frequencies: 1.75, 2.75, 3.75, 5.75, 7.75, 10.75, 16.75 and 25.75 MHz. Troubleshoot antenna system.

'HI VSWR AT MULT MHZ'

This message is displayed if Bite detected a High VSWR at two (2) or more of the test frequencies.

NOTE: If the T-9400 is connected to an antenna coupler, i.e., CU-9125 or LPA-9600 and CU-9100, the following faults may also be displayed.

'NO TUNE AT XXXX MHZ'

This message is displayed if the antenna coupler failed to tune any one of the test frequencies. See applicable coupler manual for troubleshooting.

'NO TUNE AT MULT MHZ'

This message is displayed if the antenna coupler failed to tune two(2) or more of the test frequencies. See applicable coupler manual for troubleshooting.

THIS PAGE INTENTIONALLY LEFT BLANK.

3.3.2 METER FUNCTIONS

A variety of metering functions are available on the front panel operation display at (1) in Figure 3.3.2.1 for transmit conditions.

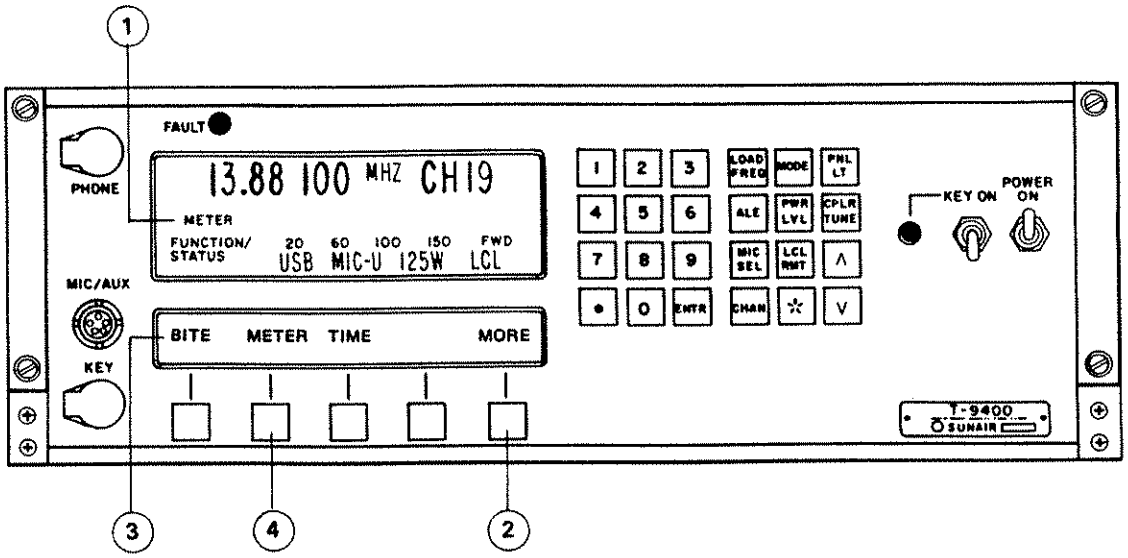

Figure 3.3.2.1 T-9400 Operational Displays.

The available Meter functions are:

'FWD' - Forward RF Power Output (shown in Figure 3.3.2.1).
'RFL' - Reflected RF Power.
'LINE' - 600 OHM Line Audio Input (either USB or LSB).
'ALC' - Automatic Level Control Voltage.

To make the desired selections depress the feature menu select key 'MORE' (2) until the feature display screen appears as indicated by (3) .

Depress the 'METER' function key (4) and the feature select screen will appear as shown in Figure 3.3.2.2.

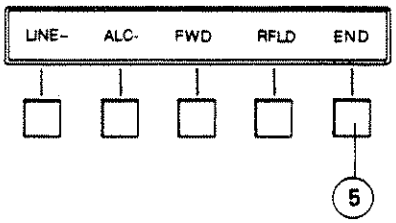

Figure 3.3.2.2 T-9400 Meter Function Select Display.

To select the desired transmit meter display, depress the feature key below the desired readout.

NOTE: The asterisk (*) will move to the entry selected indicating that it will be metered.

Once the meter selection has been made, depress the menu selector key 'END' (5) and the feature display will revert to that shown in Figure 3.3.2.1. The transmit metering will now display selected transmit function at (1) in Figure 3.3.2.1.

3.3.3 'MHz' or 'kHz' FREQUENCY DISPLAY

The primary frequency display can be indicated in Megahertz (MHz) or Kilohertz (kHz).

Depress the feature menu select 'MORE' key, (1) successively until the feature display is as shown in Figure 3.3.3.1.

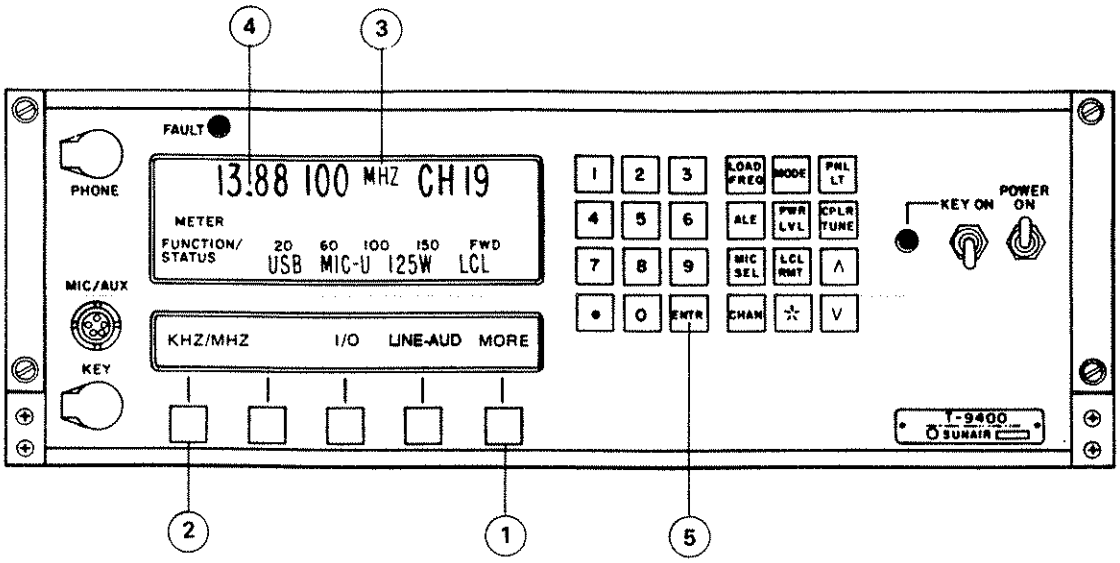

Figure 3.3.3.1 T-9400 Operating Controls.

Depressing the 'kHz/MHz' feature key, (2) will toggle the display at (3) to read either 'MHz' or 'kHz'. Note that the decimal point (4) will move three digits to the right of the place shown in Figure 3.3.3.1 when the display reads in 'kHz'.

Depress the 'ENTER' key (5) to store this selection in memory.

3.3.4 LOCAL/REMOTE OPERATION

When connected as a remote system, the control of the T-9400 may be set for 'LOCAL' (at the radio) or 'REMOTE' (from a remote control unit). The 'LCL-RMT' (Local Remote) key (1) shown in Figure 3.3.4.1 will toggle back and forth between these choices as indicated by the operational display at (2) . See Section 3.3.7, I/O Port Set-Up.

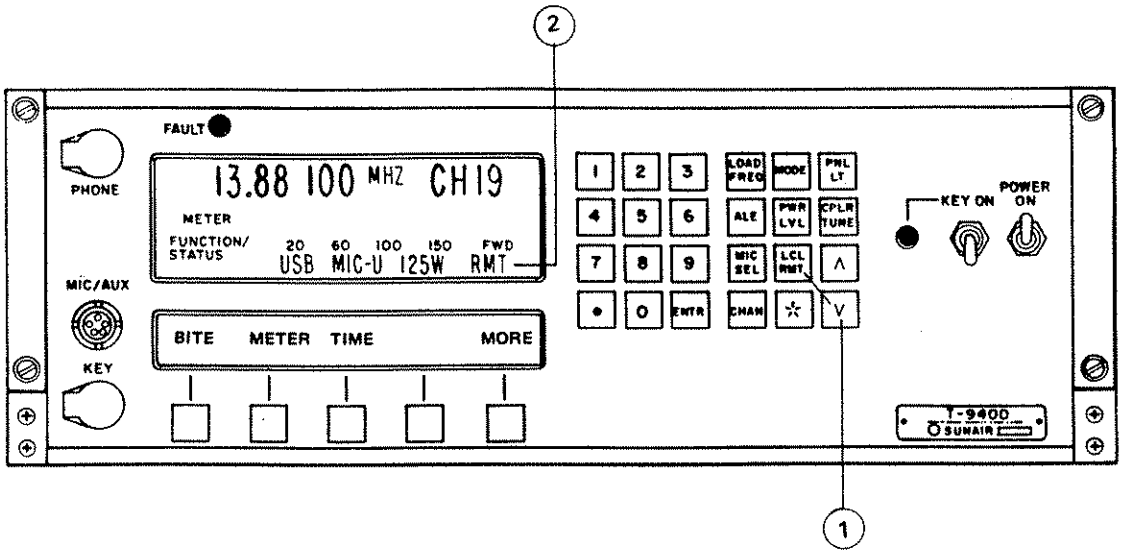

Figure 3.3.4.1 T-9400 Local/Remote Selection.

NOTE: When the equipment is in the 'RMT' (Remote) condition, any attempt to change frequencies, modes or other functions, except 'Local/Remote', will cause the message:

'FUNCTION DISALLOWED'

to appear briefly on the operational display.

NOTE: When the T-9400 is NOT connected to a remote system, and I/O is NOT selected, depressing the 'LCL RMT' key (1) will cause the message:

'NO REMOTE SYSTEM'

to appear briefly on the operational display.

NOTE: When the T-9400 is NOT connected to a remote system, and I/O IS selected, depressing the 'LCL RMT' key (1) will cause the message:

'NO REPLY FROM REMOTE'

to appear briefly on the operational display.

3.3.5 TIME DISPLAY

If a clock has not been installed. depression of the 'TIME' feature key will produce the message 'NO CLOCK INSTALLED' on the Function/status display. For equipment supplied with the clock option, the time function may be accessed by successively depressing the feature menu select key 'MORE' (1) until the feature menu shown in Figure 3.3.5.1 appears in the display.

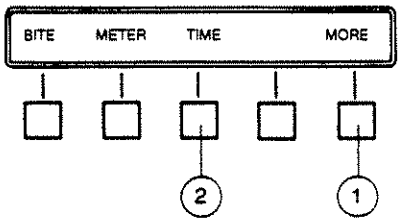

Figure 3.3.5.1 Feature Menu Display Screen.

Depress 'TIME' select key, (2) . Display will now appear as shown in Figure 3.3.5.2.

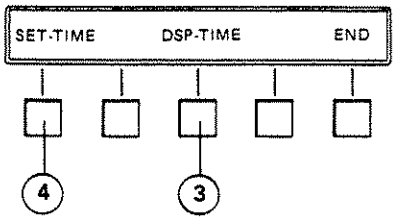

Figure 3.3.5.2 Time Display and Time Set Display.

Time can now be displayed by depressing the feature select key 'DSP-TIME' (Display Time) (3) . The presentation will appear as shown in Figure 3.3.5.3.

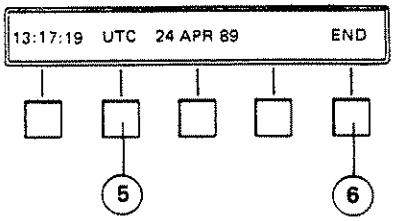

Figure 3.3.5.3 Time Display.

Other times such as 'EST' (Eastern Standard Time) and 'PST' (Pacific Standard Time) may be viewed by successive depressions of the selector key (5).

Depression of the 'END' key (6) will cause the display to revert to that shown in Figure 3.3.5.2.

TO SET TIME:

Depress the 'SET-TIME' key (4). The display will appear as shown in Figure 3.3.5.4.

NOTE: Use UTC Time ONLY.

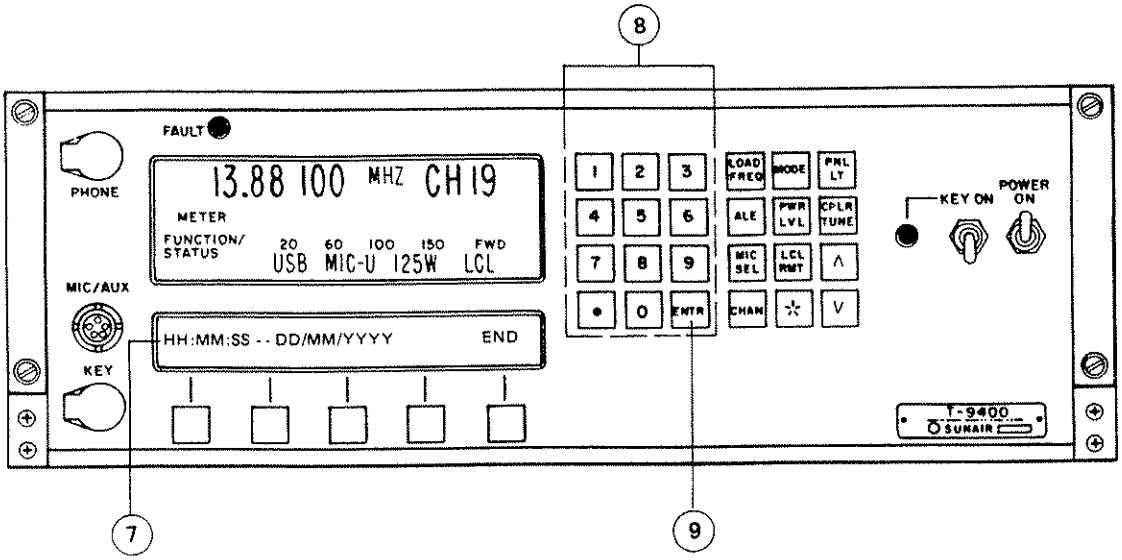

Figure 3.3.5.4 'Set-Time' Display.

The first 'H' (Hour) (7) will flash, indicating the space in the display for numeric keyboard entry. As the first number is entered on the numeric keypad, (8), the second space will flash, and so on, until numbers have been entered for hours, minutes, seconds--day, month, and year.

When the last digit has been entered, depress the 'ENTER' key (9) to set the clock. The display will revert to that shown in Figure 3.3.5.2. Depress the 'DSP-TIME' key (3) to display the time.

3.3.6 CHANNEL CLEARING AND SOFTWARE REVISION LEVEL

To clear ALL pre-programmed channel information, otherwise referenced as a memory dump, depress feature menu select key 'MORE' (1) until feature display appears as indicated in Figure 3.3.6.1.

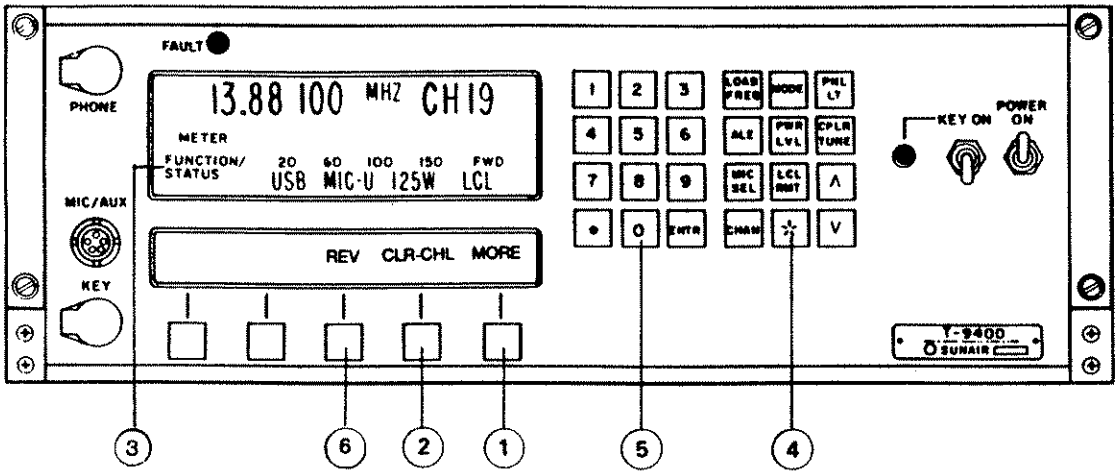

Figure 3.3.6.1 Operational Controls for Selecting Memory Dump.

Depress the 'CLR-CHL' (Clear Channel) feature key, (2). The function status screen (3) will go blank and the message:

'PRESS *0* TO CLEAR ALL CHANNELS'

will appear on the feature display. If you **DO NOT** wish to clear **ALL** channels in memory, depress the feature key 'END' and the display will revert to its normal operational presentation.

If you do wish to clear all channel information in memory, depress the asterisk (*) key (4), then the zero '0' key (5), and finally the asterisk (*) key (4) again. The memory will now be cleared.

To view the software revision (Rev) level installed on CPU and I/O PC assemblies:

Depress the 'REV' feature key (6). An asterisk will appear at 'REV*' on feature display and function status screen (3) will display the message:

'REV CPU-XX IO-XX'

Depress the 'REV' feature key (6) again. The asterisk at 'REV' on feature display will go out, and the operational display will return to normal.

9000 SERIES EQUIPMENT REMOTE CONTROL
I/O REMOTE CONTROL SELECTION

INTERIM OPERATING INSTRUCTIONS FOR I/O ACCESS USING CODE KEY

The following instructions apply to software revisions: RT-9000: C24, R-9200: B10, T-9400: A16, RCU-9310: A12, RCU-9310R: A2, RCU-9310T: A2 and all subsequent revisions.

Important Operating Notes:

(a) An * (asterisk) associated with a function indicates that the function is enabled.

(b) If no * (asterisk) appears on the Port A Conditioning Feature Menu Display the I/O is disabled.

(c) Pressing **END** will exit the I/O selection menu.

I/O PORT SET-UP

Refer to section 3.3.8 I/O Port Set-Up page revision 7/29/97 for Feature Menu Display details.

To access and configure the 9000 series equipment I/O PORT SET-UP accomplish the following steps:

1.0 Depress the **I/O** key. Located in position 2 on the Feature Menu Display.

2.0 **ENTER CODE NUMBER** will be displayed at position number 3 on the Feature Menu Display.

3.0 Enter code: **2580**, using the Frequency/Channel Entry Keypad. Note: The Operational LCD display will display a square block on the right-hand side of the Operational Display for each keypress entry.

4.0 The Operational display FUNCTION /STATUS field will now display the selected Mode, AGC , RF power and remote control status.

5.0 The Feature Display will change to: **RS232 RS422 RS485 MODEM END.**

6.0 Select the desired remote control mode, Example **RS232**. Note: The companion remote control device and remote control interconnecting cable must be configured for the selected operating mode and bit-per-second rate before proper operation can be achieved.

7.0 Upon selecting the operating mode the Feature Menu will change to: **BAUD ADDRESS END**.

8.0 Select the desired **BAUD** rate in bit-per-second.

9.0 Select the desired equipment **ADDRESS.**

10.0 Depress **END.**

11.0 **ENTER CODE NUMBER** will be displayed in the Feature Menu.

12.0 Enter code: **2580**, using the Frequency/Channel Entry Keypad. Note: The Operational LCD display will display a square block on the right-hand side of the Operational Display for each keypress entry.

13.0 The Feature Display will change to: **RS232 RS422 RS485 MODEM END**

14.0 Depress **END**.

14.0 The radio will return to normal operation.

3.3.7 'I/O' PORT SET-UP

This section deals with conditioning the T-9400 to automatically handle information, in the correct format, for external modems and/or remote lines. The exciter provides dual informational outputs located on the rear surface of the equipment as shown in Figure 3.3.7.1. Although both ports use the same connector, the plug wiring may be split to accommodate different routings for each port.

NOTE: If I/O Ports are NOT being utilized, NO I/O function should be selected. Any selection could cause 'I/O FAULT' or 'NO REPLY FROM REMOTE' to be displayed after running BITE test, or intermittently during normal operation.

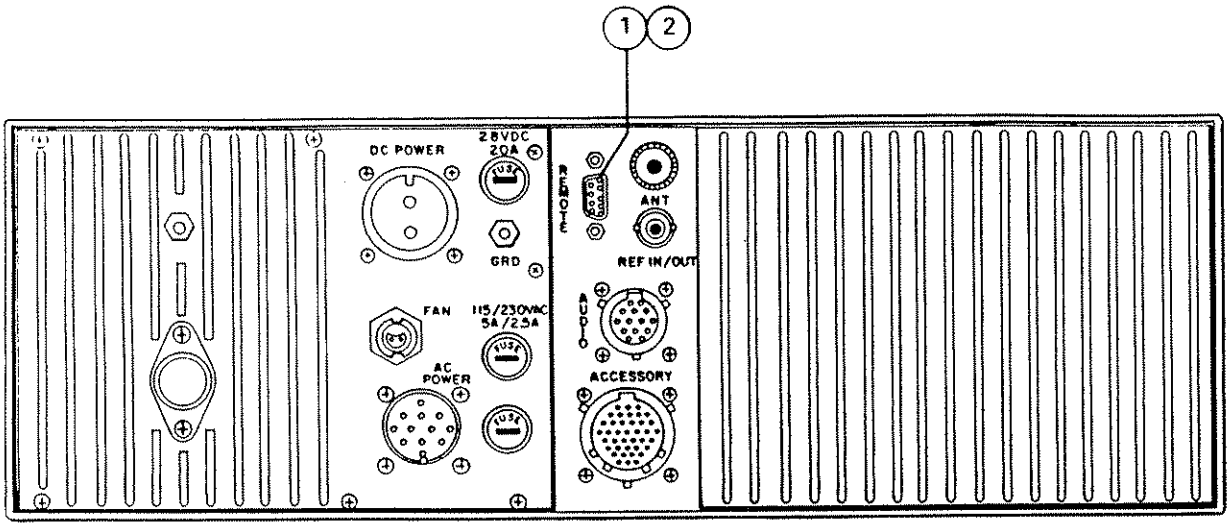

Figure 3.3.7.1 T-9400 Rear Surface Connectors.

The location of 'PORT A' is shown by (1), the location of 'PORT B' by (2) (Same Connector). Port A is a dedicated RS232 port, used for specific predetermined operations, such as 'Post-Selectors', etc. The correct output format for port B is determined by the requirements of the modem(s) and/or lines connected to this port. Once the desired format is determined, remote port 'B' may be conditioned by depressing the feature menu select key 'MORE' (1) successively until the display shown in Figure 3.3.7.2 appears.

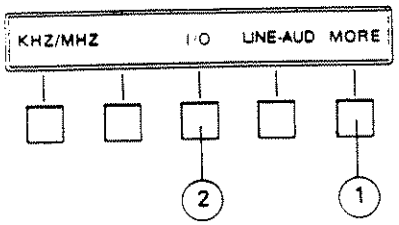

Figure 3.3.7.2 Feature Display of Port Selection Menu.

Depress the 'I/O' select key (2). The feature display will now read as shown in Figure 3.3.7.3.

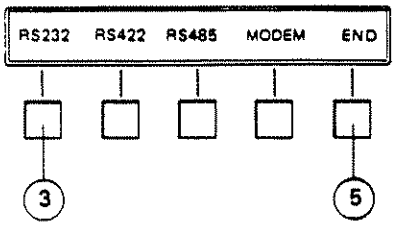

Figure 3.3.7.3 Port Conditioning Menu.

To select 'RS232', 'RS422', 'RS485', or 'MODEM' (FSK TONES) depress the feature select key immediately below the format desired. In this case, key (3) to select 'RS232'. The feature display will now appear as shown in Figure 3.3.7.4 and display the established baud rate.

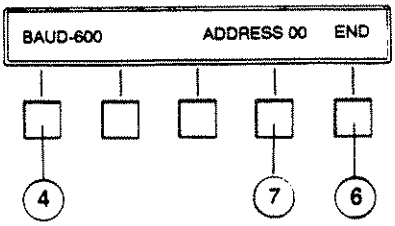

Figure 3.3.7.4 Baud Rate Display.

If a different baud rate is desired than that shown in the display in Figure 3.3.7.4, depress the feature select key (4) and choices will appear on the screen as shown in Figure 3.3.7.5.

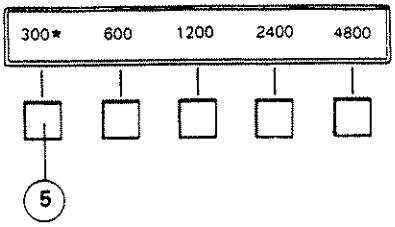

Figure 3.3.7.5 Baud Rate Selection Menu.

Depress the selector key immediately below the desired baud rate, in this case (5) for 300 baud. The feature screen will immediately revert to that shown in Figure 3.3.7.4 and the newly selected baud rate will be displayed.

Once a selection has been made, depression of the 'END' key (6) in Figure 3.3.7.4 will cause the screen to revert to that shown in Figure 3.3.7.3, and display an asterisk to the right of the selected port.

Once the port has been conditioned, depress the 'END' key (5) , shown in Figure 3.3.7.3 and the feature menu will revert to that shown in Figure 3.3.7.2.

3.3.8 ADDRESS

To permit the T-9400 to be controlled by a remote unit (such as the RPC-9286D) equipment address must be established.

With the feature menu as shown in Figure 3.3.7.4, depress 'ADDRESS 00' key to select 'ADDRESS'. The feature display will now appear as shown in Figure 3.3.8.1.

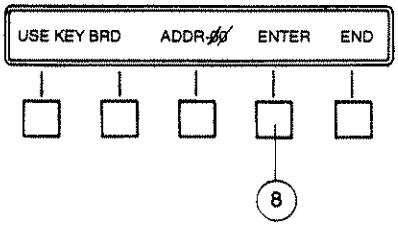

Figure 3.3.8.1 Address ØØ Display.

Depress the appropriate two (2) digit address on numeric key pad. Address XX will appear in feature display. Depress 'ENTER', key (8) to enter this address. Display reverts to Figure 3.3.7.4 and displays new address. Depress 'END' key (6) , display reverts to Figure 3.3.7.3. Depress 'END' key (5) to go to other menus.

NOTE: See remote control unit manual for further instructions.

3.3.9 'CW' KEY OPTIONS

In order to invoke access to the proper feature menu, the T-9400 must first be put in the 'CW' mode of operation. This may be done by successively depressing the 'MODE' key until the 'CW' mode is displayed on the Function/Status screen. Once the 'CW' mode has been selected, the feature menu will appear as shown in Figure 3.3.9.1.

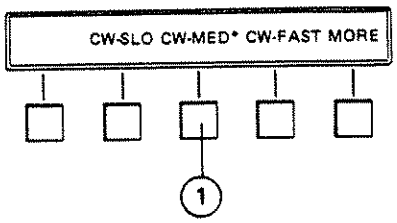

Figure 3.3.9.1 Feature Menu for Selection of 'CW' Options.

The CW key break time is normally set at 'CW-MED' (CW-Medium) (1) when the equipment is shipped from the factory. This setting will accommodate normal keying speeds of 10 to 20 wpm (words per minute). If a setting other than this is desired, it may be selected by depressing the key immediately below 'CW-SLO' (CW-Slow) for under 10 wpm or 'CW-FAST' for over 20 wpm. Note that the asterisk (*) on the screen shown in the figure will move next to the speed selected.

3.3.10 LINE AUDIO SELECTION

The audio output connector at the rear of the T-9400 provides for two (2) sets of 600 OHM output lines for each sideband audio (LSB-A&B, USB-C&D) to permit utilization of more than one external audio applique unit. Selection of either external applique may be made from the front panel by depressing the feature menu 'MORE' key (1) until the screen indicated in Figure 3.3.10.1 appears.

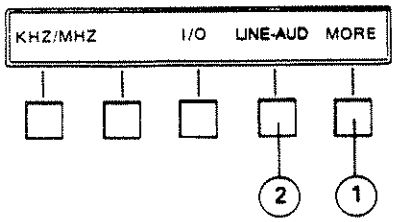

Figure 3.3.10.1 Feature Display of Port Selection Menu.

Depress the 'LINE-AUD' feature key (2) to bring up the line audio selection menu shown in Figure 3.3.10.2.

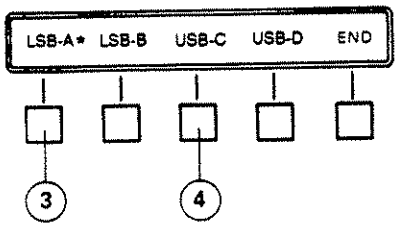

Figure 3.3.10.2 Line Audio Selection Menu.

Depressing of feature key (3) will connect the applique unit on line A to the Lower Sideband channel of the radio. Similarly depression of feature key (4) will connect the applique unit on line C to the Upper Sideband channel of the radio. The asterisk (*) will move next to the line that has been selected.

NOTE: Only one external applique unit may be connected at a time for each sideband channel. If only one applique is to be utilized it should be connected to line audio 'A' or 'C'.

Modem line selection for Lower Sideband/Upper Sideband (B&D) is accomplished in a like manner with appropriate feature keys.

3.3.11 TRANSMIT GAIN CONTROL (TGC SETUP)

The T-9400 is equipped with Transmit Gain Control (TGC) to insure optimum power output for each of the ISB sideband channels. Periodically, as the system is re-configured or at the time of initial start-up, such setup may be effected as follows.

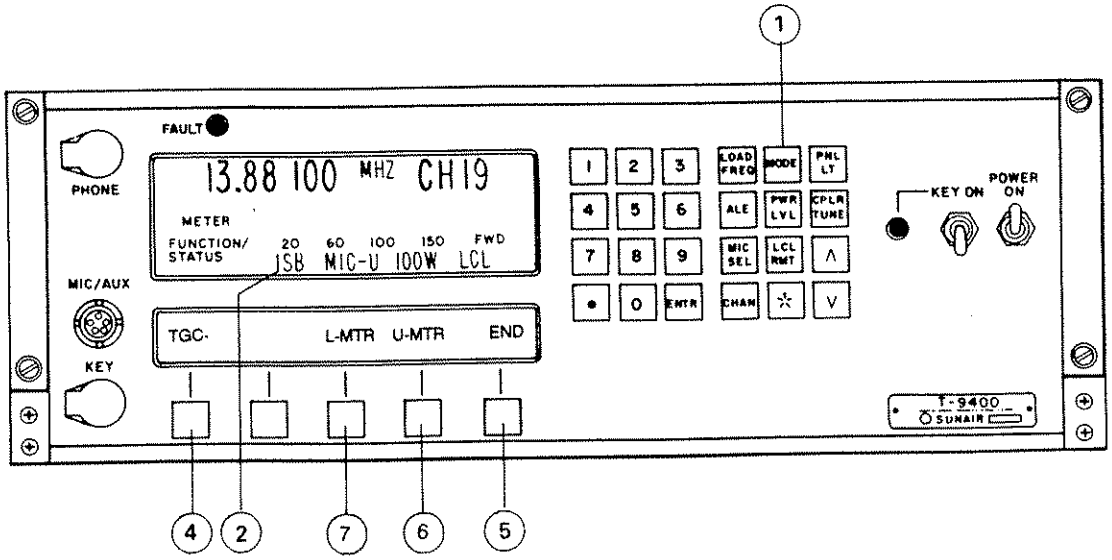

Figure 3.3.11.1 Transmit Gain Control Setup.

Referencing Figure 3.3.11.1, depress the 'MODE' key (1) successively until 'ISB' appears in the display screen at (2). The Feature Menu indicated by (3) will automatically appear. Depression of the 'TGC' key (4) will cause the exciter to automatically key and and adjust ISB Transmitter Gain. While this process is occurring, the message:

'TGC SETUP'

will appear on the function display screen. When successfully adjusted, the message will disappear. The feature menu may be exited by depression of the 'END' key (5).

3.3.12 ISB MODE - LSB LINE OR USB LINE METER SELECTION

The T-9400 can be set up in the ISB mode of operation to monitor either the LSB 600 ohm line input or the USB 600 ohm line input on the 'Operational' display. With the 'Feature' display as shown in Figure 3.3.11.1 depression of feature key (6) or (7) will select the meter function, and an asterisk (*) will move next to the meter function selected. Depress the 'END' key (5) and the 'Feature' display will appear as shown in Figure 3.3.12.1.

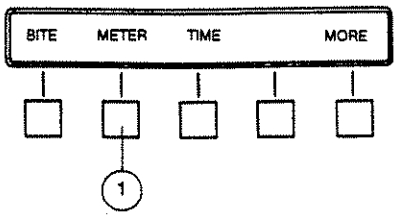

Figure 3.3.12.1 Feature Menu Display Screen.

Depress the 'METER' key (1) and the feature select screen will appear as shown in Figure 3.3.12.2.

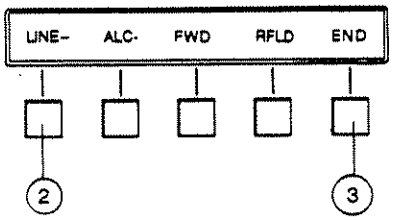

Figure 3.3.12.2 Meter Function Select Display.

Depress the 'LINE' key (2) and the asterisk (*) will move to the meter entry selected and displayed on the 'Operational' display. Depress 'END', key (3) to use other menus.

3.4 ADVANCED OPERATIONS

This section addresses those features and functions that are specialized, or invoke some of the unique features of the T-9400.

3.4.1 OPTIONS

If the T-9400 Exciter has any of the available options installed see applicable section(s) for the operation procedures.

3.4.1.1 OVEN

When the optional High Stability Reference Oscillator (P/N 5024013701) is installed the function status display may read:

'OVEN WARM UP'

for up to several minutes, when the T-9400 is turned 'ON', until the reference oscillator is stabilized.

3.4.1.2 LSB DATA FILTER

Depress 'MORE', key (1) until feature display is as shown in Figure 3.4.1.2.1.

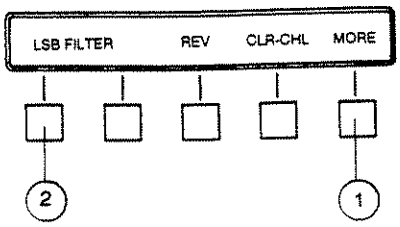

Figure 3.4.1.2.1 Feature Display for 'LSB FILTER' Selection.

Depress 'LSB FILTER', key (2) . The feature display will now appear as shown in Figure 3.4.1.2.2.

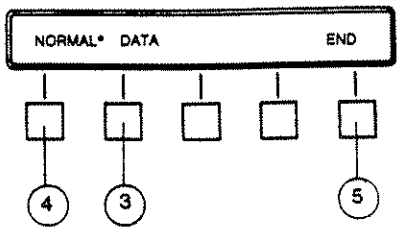

Figure 3.4.1.2.2 Feature Display for LSB Filter Mode Selection.

Depressing 'DATA', key (3) will cause the asterisk (*) to move to 'DATA' for data transmission. Depressing 'NORMAL', key (4) will cause the asterisk (*) to move to 'NORMAL' for voice transmission. Upon mode selection, depress 'END' key (5) to return to Figure 3.4.1.2.1; depress 'MORE' key (1) to bring up other menus.

3.4.1.3 USB DATA FILTER

Depress 'MORE' key (1) until feature display is as shown in Figure 3.4.1.3.1. Depress 'USB FILTER', key (2) .

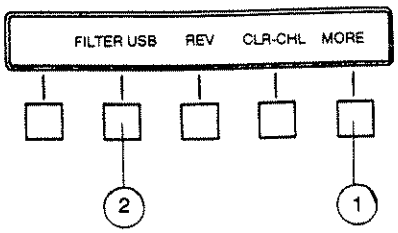

Figure 3.4.1.3.1 Feature Display for USB Filter Selection.

Feature display will appear as shown in Figure 3.4.1.3.2.

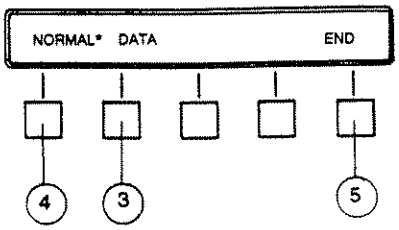

Figure 3.4.1.3.2 Feature Display for USB Filter Mode Selection.

Depressing 'DATA' key (3) will cause the asterisk (*) to move to 'DATA' for data transmission. Depressing 'NORMAL', key (4) will cause the asterisk (*) to move to 'NORMAL' for voice transmission. Upon mode selection, depress 'END' key (5) to return to Figure 3.4.1.3.1; depress 'MORE' key (1) to bring up other menus.

3.4.1.4 POST-SELECTOR

Depress 'MORE' key (1) until feature display is as shown in Figure 3.4.1.4.1.

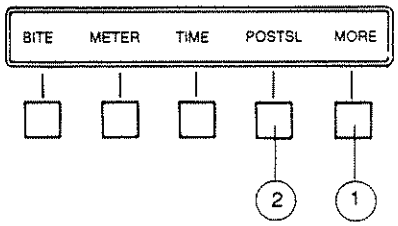

Figure 3.4.1.4.1 Feature Display for 'POST-SELECTOR' Selection.

Depress 'POSTSL' key (2) . An asterisk (*) will appear behind 'POSTSL*', indicating you have selected the optional external post-selector to be used with the T-9400.

3.4.1.5 RADIO SECURITY

The T-9400 exciter can be equipped with a security feature which, when invoked, will prevent unauthorized personnel from either viewing radio settings (by blanking the operational display) or changing any radio setting (by disabling the front panel controls).

For further information, contact Sunair.

THIS PAGE INTENTIONALLY LEFT BLANK

SECTION IV

THEORY OF OPERATION

4.1 GENERAL

The theory of operation of the T-9400 Exciter is presented in eight (8) parts:

(1) Front Panel Module.
(2) Microprocessor Assembly.
(3) Synthesizer Assembly.
(4) Exciter Module.
(5) Filter Module.
(6) Select/Distribution Reference.
(7) Power Amplifier Module.
(8) DC and AC Power Assemblies.

Figure 4.1.1 is the overall block diagram of the T-9400 Exciter referred to in the discussion.

4.2 NON-SIGNAL CIRCUIT SECTION

4.2.1 FRONT PANEL ASSEMBLY 1A1

The Front Panel Assembly contains the circuitry necessary to provide analog and control interfacing with appropriate sub-assemblies. It also provides and accepts digital information through the exciter control/data bus, via the microprocessor assembly, with the various other assemblies. A wide screen Liquid Crystal Display (LCD) indicates operating status such as frequency, channel, mode, MIC, RF power level and local/remote control as selected by front panel keypad. The LCD contains a bar graph display which can selectively indicate transmit forward/reflected power, and 600 ohm transmit audio levels. The exciter's Built-In-Test Equipment (BITE) circuitry monitors status of all exciter plug-in assemblies as well as external LPA-9600 Solid State Kilowatt Amplifier and CU-9100 (1000 Watt) or CU-9125 (125 Watt) Digital Antenna Coupler equipment. Plain language messages are displayed on the LCD, providing assurance of continuing functionality of the T-9400 Exciter or HF system. Selecting the exciter BITE function, exercises a comprehensive test routine (contained in the microprocessor software) which checks all plug-in sub-assemblies to the Lowest Repairable Unit (LRU). Should a fault be detected, the 'FAULT' Light Emitting Diode (LED) in the upper left hand corner will illuminate and the LCD will display what LRU(s) is (are) inoperative. A Soft Key Menu LCD located directly below the primary LCD permit the selection of enhanced functions not found on the keyboard entry keypad, such as BITE, Time-of-Day, etc... The soft keys also provide access to remote control configuration, meter selections and remote audio.

4.2.2 MICROPROCESSOR ASSEMBLY 1A2A1

4.2.2.1 GENERAL

The Microprocessor Assembly provides overall control of the T-9400 functions. It enables most Front Panel controls, status indications, and storage or operation on any frequency. By means of external interfacing, it also controls the LPA-9600 Solid State Kilowatt Amplifier and CU-9100 (1000 watt) or CU-9125 (125 watt) Digital Antenna Couplers. The information exhibited on the Front Panel LCDs is furnished by the Microprocessor Assembly. It has complete control of all frequency information routed to the Synthesizer Assembly 1A2A2 via Control/Data Bus. The Microprocessor Assembly acquires BITE information from the exciter assemblies via Control/Data Bus. The Microprocessor Assembly via Control/Data Bus selects the proper Band Pass Filter within the Front End Assembly 1A2A5 and the appropriate Low Pass Filter in the Filter Module 1A3. The Microprocessor Assembly is referenced to a 5 MHz standard frequency, by means of the Select/Distribution Amplifier Assembly 1A2A6 for its clock signal.

4.2.2.2 MICROPROCESSOR U2

The Microprocessor Assembly contains the 80C85 (8-bit) microprocessor U2. U2 is the prime control for all of the T-9400's functions. It executes instructions (software) contained in EPROM U13. U2 controls circuits on the Microprocessor Assembly by three busses:

a) AD0 thru AD7, a Multiplexed Address/Data Bus containing either data or address information.

b) A8 thru A15, which always contains address information.

c) The Control/Status bus which contains signals:

$\overline{RD}$ = READ Control,
$\overline{WR}$ = WRITE Control,
IO/$\overline{M}$ = I/O Write, I/O Read, Memory Write or Memory Read,
ALE = Address Latch Enable.

4.2.2.3 ERASABLE PROGRAMMABLE READ ONLY MEMORY (EPROM) U13

The EPROM U13, contains the necessary data bits which make up the program or software which microprocessor U2 uses to control the T-9400 functions.

4.2.2.4 STATIC RANDOM ACCESS MEMORY (SRAM) U3

The SRAM provides an area of temporary storage which U2 uses as a 'scratch pad' during the execution of its program with U13.

4.2.2.5 ELECTRICALLY ERASABLE PROGRAMMABLE READ ONLY MEMORY (EEPROM) U8

Long term storage of the T-9400 functions is handled by the non-volatile memory in U8. The frequency information for each of the 128 channels, mode, power level, etc, is placed in U8 to be used by U2 during the execution of its program with U13. U8 is an 8k X 8 bit CMOS EEPROM in which each byte may be reliably written 10,000 times without degrading device operation. The data in the byte will remain valid after its last write operation for ten (10) years with or without power applied.

4.2.2.6 OPTIONAL SMART WATCH U14(A)

Smart Watch is an optional IC that is piggy backed into U14s (a spare EPROM) socket. It keeps track of hundredths of seconds, seconds, minutes, hours, days, date of the month, months and years. An embedded lithium energy cell maintains watch information whenever the Exciter is turned off. The above information is available to U2 Microprocessor on the Multiplexed Address/Data Bus to be displayed on the Front Panel LCD as Time-of-Day Clock.

4.2.3 OPTOCOUPLER ASSEMBLY 1A2A1A1

The Optocoupler is a sub-assembly containing (PS2401A-4) optically coupled isolators that plug into the Microprocessor Assembly 1A2A1. The Optocoupler assembly electronically isolates the microprocessor busses from the Exciter Control/Data Bus to prevent transfer of Exciter noise to the Microprocessor Assembly or the transfer of Microprocessor Bus noise to Exciter circuits.

4.2.4 SYNTHESIZER ASSEMBLY 1A2A2

The Synthesizer Assembly consists of one (1) printed circuit mother board (1A2A2A5) and four (4) plug in assemblies: 1A2A2A1 - First Local Oscillator, 1A2A2A2 - Second Local Oscillator, 1A2A2A3 - Third Local Oscillator/Beat Frequency Oscillator, and the 1A2A2A4 - Reference Loop and Doubler.

4.2.4.1 GENERAL

The Synthesizer Assembly generates the three (3) Local Oscillator (LO) injection frequencies necessary to determine the operating frequency of the T-9400 Exciter. The synthesizer input is a 5 MHz reference signal from the internal Temperature Controlled Crystal Oscillator (TCXO) or an external reference signal via the 1A2A6 Reference Select/Distribution Amplifier assembly. The three LO injection frequencies are produced from the 5 MHz reference by digital phase lock techniques. The frequency accuracy of the Exciter is therefore, solely determined by the accuracy of the frequency standard employed.

4.2.4.2 THIRD LO/BFO ASSEMBLY 1A2A2A3

The 455 kHz Third LO/BFO reference is produced by a bus controlled Phase-Locked Loop (PLL) operating on a Voltage-Controlled Oscillator (VCO). The output of the (455 kHz) Third LO is used as a carrier generating frequency in transmit.

4.2.4.3 SECOND LO ASSEMBLY 1A2A2A2

The 47.650 MHz Second LO varied +5 kHz in 10 Hz steps by means of two (2) bus controlled PLL VCOs. The Second LO output is used in the 1A2A4 IF/Filter Assembly to convert the 455 kHz First IF frequency to the Second IF frequency of 48.305 MHz.

4.2.4.4 FIRST LO ASSEMBLY 1A2A2A1

The First LO Assembly consists of four (4) individual bus controlled PLL VCOs, covering the frequency range of 48.31 to 78.31 MHz in 1 kHz steps. Only one (1) of the PLL VCOs is activated at any given time, and is determined by HF Transmit Frequency selected, through the microprocessor assembly, via the exciters Controlled Data Bus. The frequency output of the First LO Assembly is given by:

$$F1 = 48.305 \text{ MHz} + F0 \text{ MHz}$$

where F1 = First LO output frequency
F0 = Selected T-9400 operating frequency (ie 1.60000 MHz).

Example: 48.305 MHz + 1.60000 MHz = 49.905 MHz.

The First LO frequency is used in the 1A2A5 Front End Assembly to down convert the transmit Second IF of 48.305 MHz to the final desired RF output frequency.

4.2.4.5 REFERENCE LOOP AND DOUBLER ASSEMBLY 1A2A2A4

The Reference Loop and Doubler Assembly consists of a Reference Frequency Divider, a PLL controlled 40 MHz Crystal Oscillator, and a Frequency Doubler Circuit that produce the 1 MHz and 40 MHz outputs used by the Third LO Assembly and the 40 MHz and 80 MHz used by the Second LO Assembly in synthesizing their outputs.

4.3 SIGNAL SECTION

This section of the T-9400 is found on three (3) modules:

(1) The Power Amplifier module - 1A4.

(2) The Filter Module - 1A3, containing:
- 1A3A1 - RF Detector Assembly.
- 1A3A2 - Filter Assembly Bands 1 thru 4.
- 1A3A3 - Filter Assembly Bands 5 thru 8.

(3) The Exciter Module - IA2, containing:
- 1A2A3 - Audio Assembly.
- 1A2A4 - I.F. Assembly.
- 1A2A5 - Front End Assembly.

These three assemblies are interconnected by means of the 1A2A7 Exciter Motherboard.

4.3.1 GENERAL SIGNAL FLOW

Input to the exciter is available from three sources:

a) Microphone.
b) 600 ohm balanced lines.
c) CW key.

The microphone input signal from the 1A1 Front Panel is routed to the 1A2A3 Audio Assembly where it is amplified and electronically switched to the microphone/600 ohm audio circuits. This microphone output is level controlled by an internal adjustment. The output may be fed thru the Transmit Audio Compressor circuitry or switched to bypass these circuits. The microphone audio amplified switched to the transmit audio amplifier thus providing the transmit audio at the proper level. The 600 ohm balanced audio input is level controlled by an internal adjustment then buffered and electronically switched thru the microphone/600 ohm audio switch circuits. This audio can also be internally switched thru the Transmit Audio Compressor circuits or switched to bypass these circuits. The audio signal then follows the same path as the microphone and is signal.

Keying the exciter through the CW key, enables the CW sidetone switch. The CW tone is buffered and coupled to the transmit audio buffer U9B. A second buffer and internal level control provides sidetone to the front panel phone jack. The transmit audio from either of the three sources is supplied to the audio buffer on the 1A2A4 IF/Filter Assembly. This audio is applied to the balanced modulator along with 455 kHz from the Third Local Oscillator. The balanced modulator suppresses the carrier and produces two outputs:

a) 455 kHz plus the audio frequencies (Upper Sideband, USB).
b) 455 kHz minus the audio frequencies (Lower Sideband, LSB).

Hence, the output of the balanced modulator is Double Sideband Suppressed Carrier, DSBSC. After amplification, the DSBSC signal is diode gated into the USB Filter, LSB Filter, or the optional Data Filter as selected via controls from 1A2A1 Microprocessor Assembly. AM operation is, in reality Carrier plus USB only, so the AM Filter is not used in transmit. The appropriate sideband filter eliminates the unwanted sideband and the output is fed thru another diode gate into the mixer preamplifier. At this point if the AM mode of operation has been selected, the AM carrier (455 kHz) is injected into the mixer preamplifier. The balanced mixer, mixes the SSB signal and the selected Second LO frequency of 47.845 thru 47.855 MHz and produces the desired transmit Second IF of 48.305 MHz and the unwanted mixer products. These frequencies are amplified in a fixed gain Monolithic Amplifier and routed thru the narrowband 48.305 MHz Crystal Filter to remove the unwanted mixer products. The output of 48.305 MHz is amplified in another fixed gain Second IF Monolithic Amplifier. The amplified signal is passed thru the VHF Transmit Gain Control circuit to a fixed gain transmit Second IF amplifier and then routed to the 1A2A5 Front End Assembly.

The VHF transmit gain control circuit is internally adjusted for static operation. During dynamic operation this circuit is electronically controlled by the Automatic Level Control/Automatic Carrier Control (ALC/ACC) circuits. The ALC/ACC sample the forward and reflected power in the 1A3 Filter Module and produce the voltages to control the gain of the transmit Second IF output signal. When the T-9400 is used with the external LPA-9600 the ALC and ACC voltages from the LPA-9600 are also sampled in the ALC/ACC control circuits to control the gain of the transmit Second IF output signal. The 48.305 MHz transmit Second IF is brought into the 1A2A5 Front End Assembly thru the ALC current circuit in to the mixer. The mixer mixes the 48.305 MHz and the selected First LO frequency 48.31 to 78.31 MHz to provide the desired frequency output between 1.6 and 30 MHz. The mixer output is Low Pass filtered to remove undesired mixer products and the output is amplified in predrivers Q11, Q12, and Q13. The RF signal is again amplified in Drivers Q9 and Q10 to a level of 0.5 watts PEP. The RF signal is then band pass filtered in one of eight filters and routed to the 1A4, Power Amplifier Module.

The ALC current circuit is controlled by the 1A5 DC Power Supply Module current ALC detector circuit which monitors the +28 VDC current supplied to the 1A4 Power Amplifier Module. When ever the power amplifier transistors draw excessive current, this circuit sends a signal to the 1A2A5 ALC (I) circuit causing it to attenuate the Transmit Second IF signal input to the Mixer, reducing the output from the 1A2A5 Front End Assembly and thereby limiting the Power Amplifier transistors current to a safe level.

The 0.5 Watts of transmit RF power is amplified in 1A4 Push-Pull Drivers Q1 and Q2. The amplified RF is transformer coupled into two sets of Push-Pull Power Amplifiers (Q3, Q4, and Q5, Q6) whose output is coupled to an output combiner circuit to produce the normal 125 watt PEP R.F. output. The PA output is supplied to the 1A3 Filter Module. The filter module consists of 8 half-octave low pass filter bands. The selected filter operates in both receive and transmit. The RF output from the selected filter is routed thru the VHF filter the Forward and Reflected Power Detector circuits and out to the antenna.

The 1A5A1 DC to DC Power Supply Module is the primary power supply, utilized in the T-9400 transceiver. The DC input power is routed to three high-efficiency switching regulators to produce the +5 VDC Digital, +5 VDC Analog, and +12 VDC needed for the operation of the exciter circuits. Each of the IC regulators are electronically over voltage protected. Whenever the regulators output voltage exceeds a predetermined level, an electronic circuit senses a fault and grounds the output of that regulator, preventing damage to the transceiver circuits. The +28 VDC applied to the exciter circuits is protected with a fuse and transient protection device. The Current ALC Detector circuit monitors the DC input current applied to the 1A4 Power Amplifier Module. Whenever the PA transistors drain excessive current this circuit will cause the RF output from the 1A2A5 Front End assembly to reduce drive power causing the PA transistors current to return to safe limits. The optional 1A5A2 AC power supply produces a regulated +28 VDC that is applied to the DC to DC Power Supply. In AC line operation, this power supply is of linear design reducing the undesirable effects of Radio Frequency Interference (RFI) and Electromagnetic Radiation Interference (EMI) from the exciter. When both power supplies are installed the T-9400 Exciter accommodates both AC line and DC battery power thru separate connectors. With both AC and DC power connected, the supply will automatically sense AC line reductions or failure and switch to the DC battery back up voltage source.

The 1A2A6 Select/Distribution Reference Amplifier assembly amplifies and TTL conditions the exciter TCXO 5 MHz and routes it to the 1A2A2 Synthesizer and 1A2A2 Microprocessor assemblies. By internal switches the TCXO amplified signal may be connected to the exciter's rear panel to external peripheral equipment. Also an external frequency standard can be applied to the rear panel and switched into the assembly in place of the exciter TCXO.

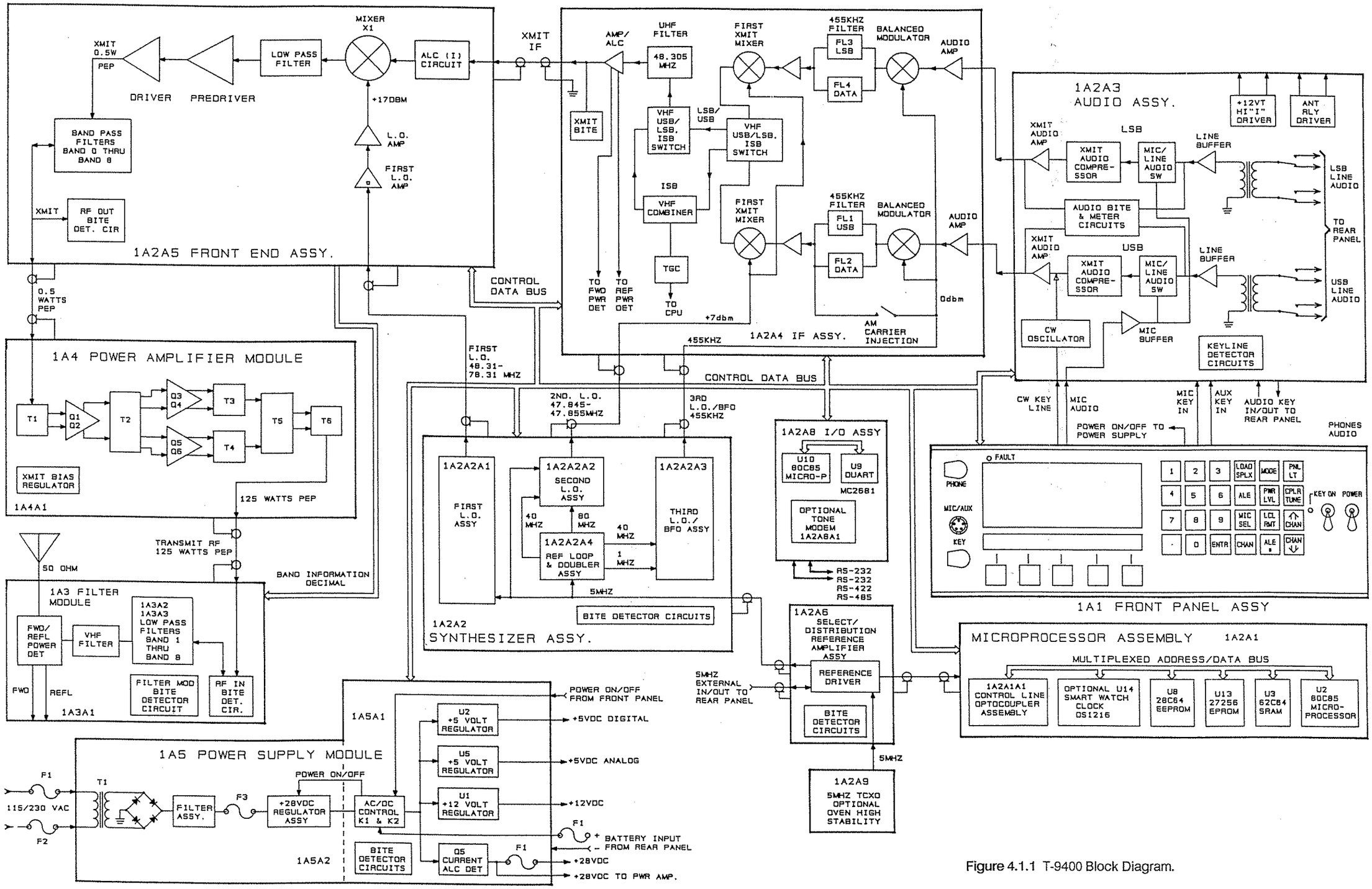

Figure 4.1.1 T-9400 Block Diagram.

THIS PAGE INTENTIONALLY LEFT BLANK.

SECTION V

FAULT ISOLATION/MAINTENANCE AND REPAIR

5.1 GENERAL

This section provides the procedures for Fault Isolation, Maintenance and Repair to the Lowest Repairable Unit (LRU) level.

5.2 DISASSEMBLY

Disassembly should be only to the extent necessary to accomplish the repair or replacement of the defective LRU. Procedures for the disassembly of major modules and assemblies are given in the following paragraphs.

5.2.1 TOP OR BOTTOM EXCITER COVER REMOVAL

Refer to Figure 5.2.1.1.

a) Remove the three screws at the rear of the cover.
b) Release cover latches.
c) Pull cover up and back from the front panel (1A1).

5.3 TEST SET-UP

5.3.1 PRELIMINARY

Connect T-9400 and test equipment as shown in Figure 5.3.1.1.

> WARNING: For personal safety and to prevent damage to voltage sensitive components in the transceiver, always turn 'OFF' the T-9400 whenever reseating printed circuit cards (PC), LRUs, and when replacing fuses.

5.4 BITE

5.4.1 PRELIMINARY

The 'BITE' of the T-9400 Exciter provides immediate LRU faults. The Surveillance BITE is controlled by the microprocessor on CPU Assembly 1A2A1. It checks the operational status of the LRUs with the exception of the DC to DC Power Supply 1A5A1, AC Power Supply 1A5A2, and the Select/Distribution Reference Amplifier 1A2A6. These LRUs have self-surveillance BITE non-dependent upon CPU Assembly 1A2A1.

The front panel LCD will display a plain language 'FAULT MESSAGE', the 'FAULT' Red LED will illuminate on the Front Panel Figure 5.4.1.5 and on the faulty LRU. (See Figures 5.4.1.1 and 5.4.1.2).

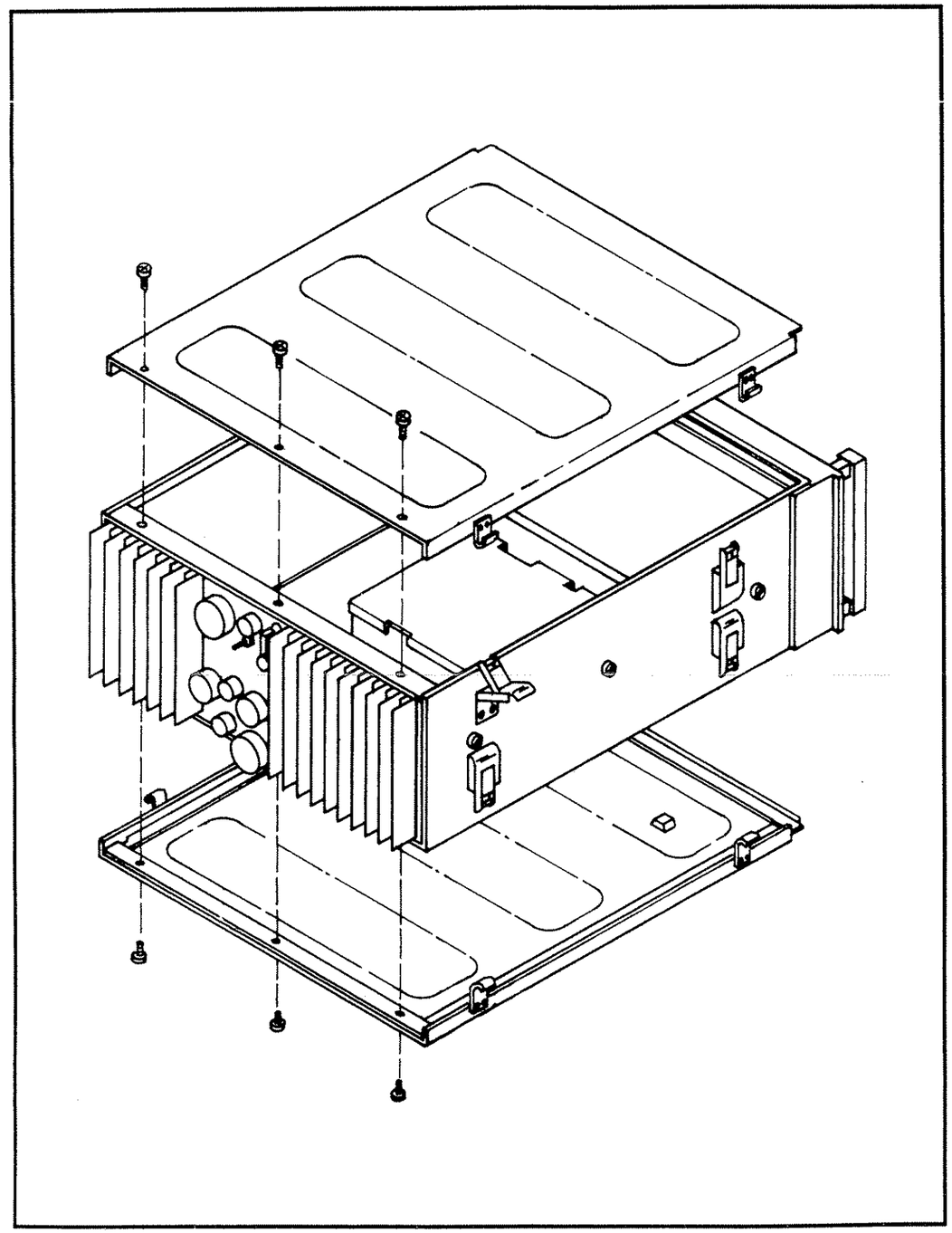

Figure 5.2.1.1 Top or Bottom Exciter Cover Removal.

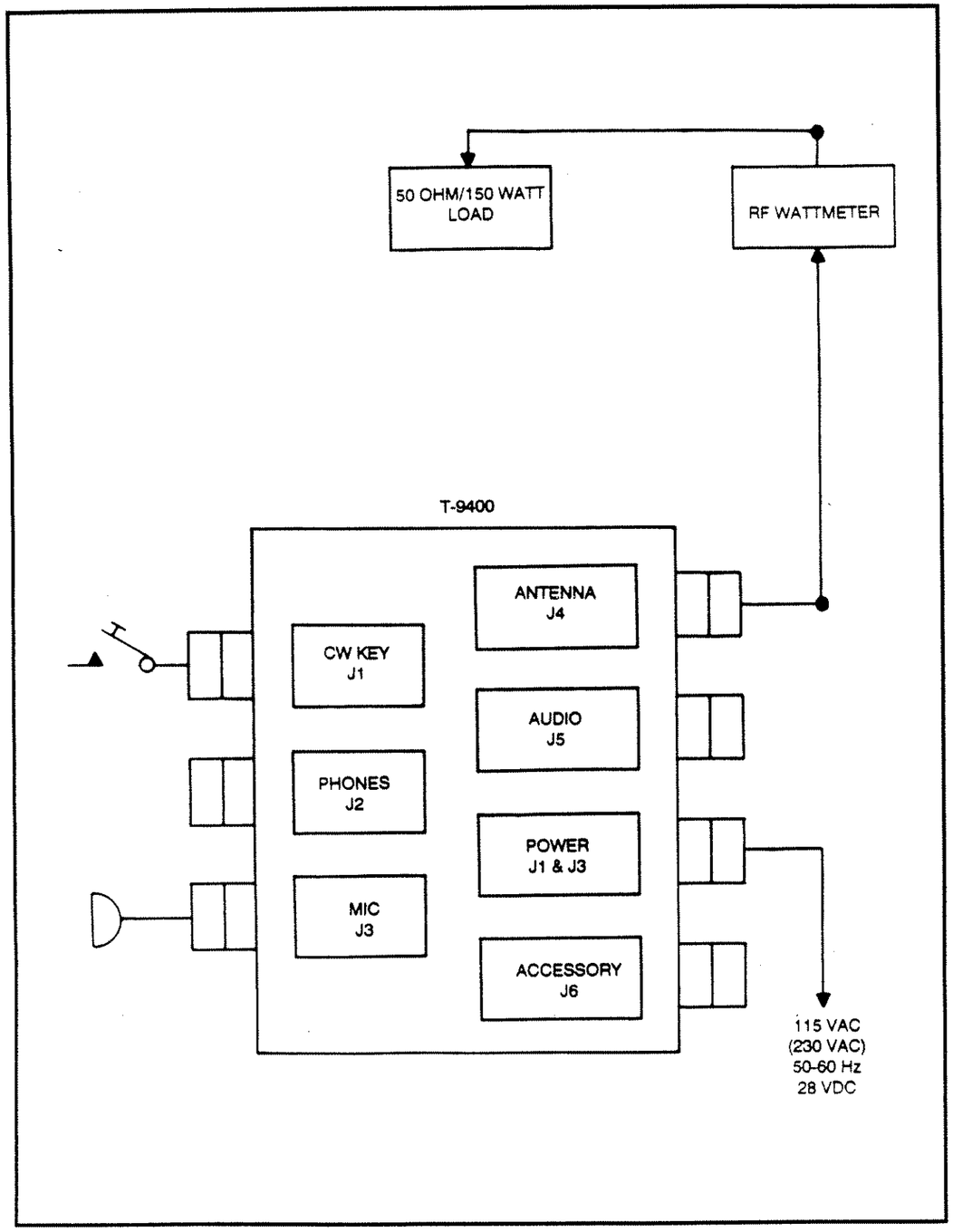

Figure 5.3.1.1 Exciter BITE Test Set-Up.

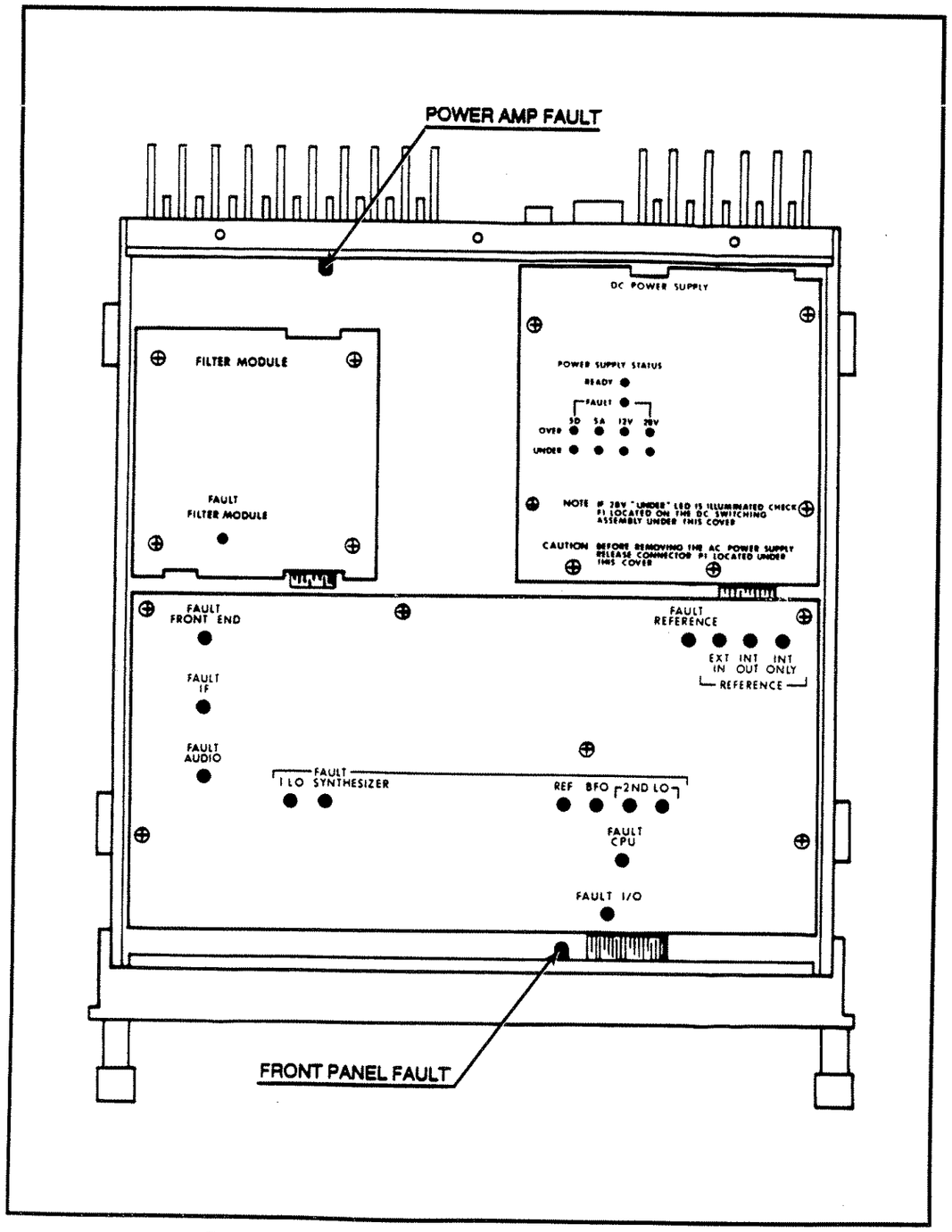

Figure 5.4.1.1 Top View of T-9400 LRU 'Fault Indicators'.

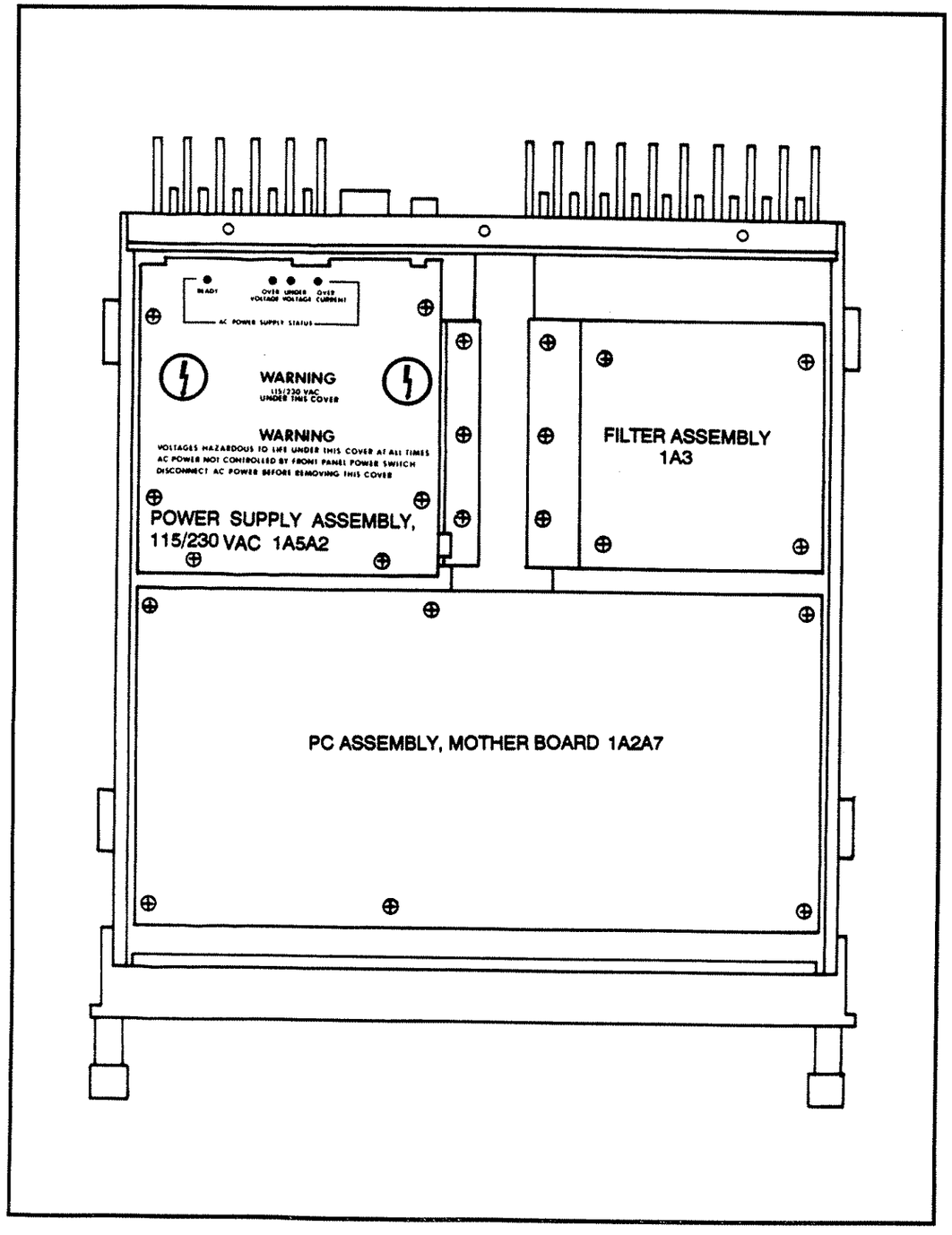

Figure 5.4.1.2 Bottom View of T-9400 AC Power LRU 'Fault Indicators' Location.

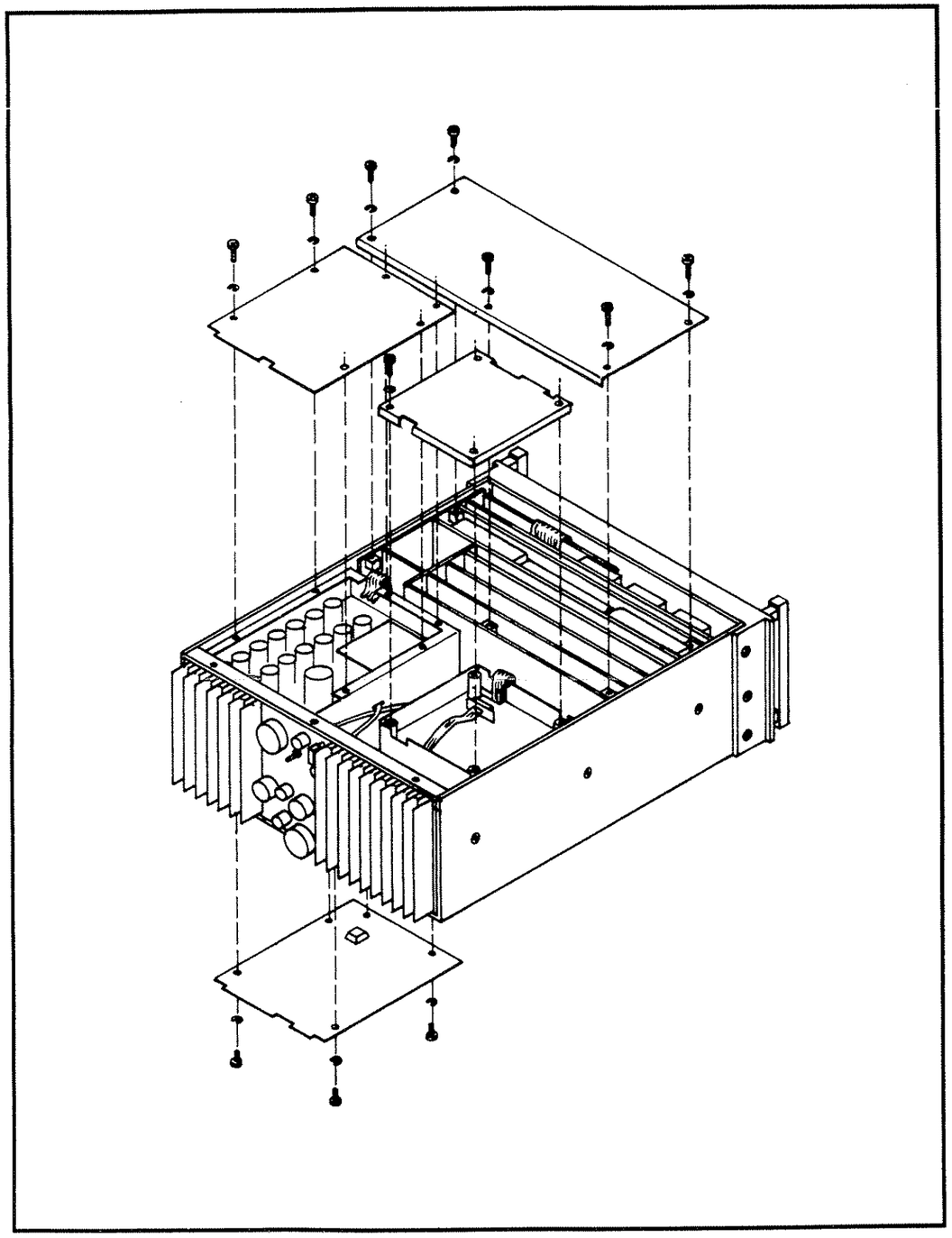

Figure 5.4.1.3 Module Cover Removal.

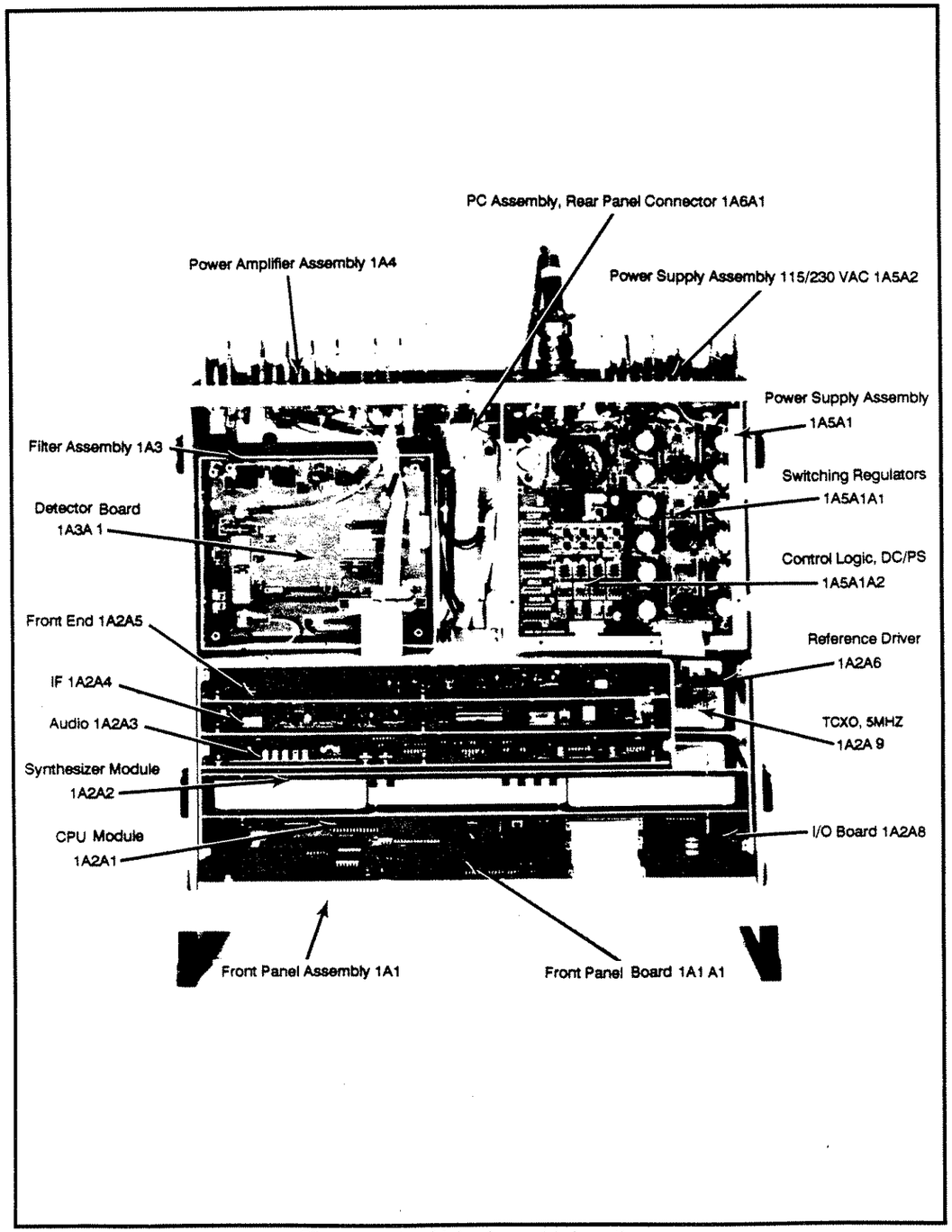

Fiigure 5.4.1.4 Major Assembly Locations.

With T-9400 Exciter connected as in Figure 5.3.1.1 turn 'ON' the Exciter and perform the following:

NOTE: If the T-9400 you are checking is normally used with a remote control unit and you are bench checking without the remote unit, you MUST TURN OFF the I/O in the T-9400. See Section 3.3.7.

Depress the Feature Menu 'MORE' key **1** successively until the Feature Menu shown in Figure 5.4.1.6 is indicated on the Feature Menu Display **2** .

Depress the 'BITE' key **3** . The equipment will initiate a self test routine of all common modules and will display the results at Function/Status **4** of the Operational Display. The initial message will be:

'BITE IN PROGRESS'.

As each common module is tested a corresponding message will appear briefly on the Operational Display in the following order:

'FRONT PANEL O.K.'	*or*	'FRONT PANEL FAULT'
'CPU O.K.'	*or*	'CPU FAULT'
'SYNTHESIZER O.K.'	*or*	'SYNTHESIZER FAULT'
'POWER SUPPLY O.K.'	*or*	'POWER SUPPLY FAULT'

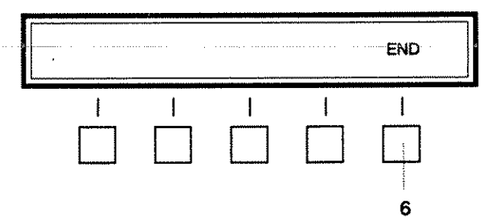

Figure 5.4.1.5 BITE Sub-Menu

Frequency displayed will step through the following test frequencies: 1.75, 2.75, 3.75, 5.75, 7.75, 10.75, 16.75 and 25.75 MHz. Frequency will step back to 1.75 MHz and Operational Display will step through:

'BITE IN PROGRESS'

'AUDIO O.K.'	*or*	'AUDIO FAULT'
'IF O.K.'	*or*	'IF FAULT'
'FRONT END O.K.'	*or*	'FRONT END FAULT'
'POWER AMPL O.K.'	*or*	'POWER AMPL FAULT'
'FILTER MODULE O.K.'	*or*	'FILTER MODULE FAULT'

The filter module is first checked at 1.75 MHz, then is stepped through above test frequencies.

At the conclusion of a valid 'BITE' test, the message:

'TEST COMPLETED'

will appear on the Operational Display. To return to normal operation you must Depress 'END' key **6** See Figure 5.4.1.5.

NOTE: In any of the above tests, if a 'FAULT' **4** and **5** is detected, the test will stop at that particular 'FAULT'. By depressing the 'MORE' key 1, you are able to rerun the 'BITE' again to double-check the fault.

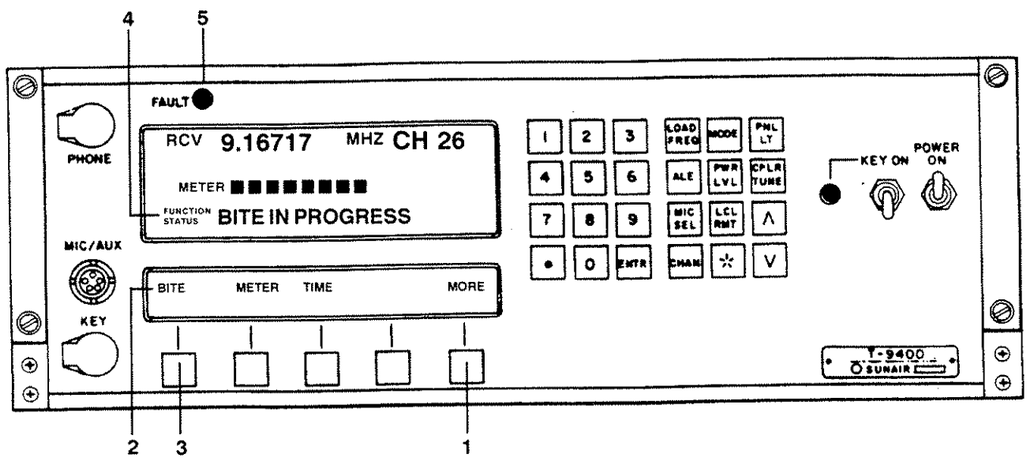

Figure 5.4.1.6 The T-9400's Operational and Feature Menu Displays.

5.4.2 NON SIGNAL PATH MODULES

NOTE: Refer to Figures 5.4.1.3 and 5.4.1.4 for module cover removal and assembly locations.

5.4.2.1 FRONT PANEL FAULT

This is an indication of a failure on the Front Panel P.C. Board Assembly 1A1A1.

a) Turn Exciter 'OFF' and remove Front Panel Module 1A1. See Figure 5.4.2.1.1.

b) Remove and replace Front Panel P.C. Board Assembly 1A1A1. See Figure 5.4.2.1.1.

c) Reinstall Front Panel Module 1A1. Turn Exciter 'ON'.

d) Repeat 'BITE TEST'. Upon completion of successful test, return Exciter to operational status and return failed 1A1A1 P.C. Assembly to factory for repair.

e) If in step d) above, test fails the Front Panel test again, turn 'OFF' Exciter and remove 1A1 Module; replace with original 1A1A1 P.C. Assembly. Return the failed 1A1 Module to factory for repair.

5.4.2.2 CPU FAULT

This is an indication of a failure on the P.C. Assembly CPU 1A2A1.

a) Turn the Exciter 'OFF' and remove and replace P.C. Assembly 1A2A1. See Figures 5.4.1.3, 5.4.1.4, and 5.4.2.2.1 thru 5.4.2.2.2.

b) Turn 'ON' Exciter and repeat 'BITE TEST'. Upon completion of a successful test, return Exciter to operational status.

c) Return failed P.C. Assembly 1A2A1 to factory for repair.

5.4.2.3 I/O FAULT

This is an indication of a failure on P.C. Assembly I/O 1A2A8 .

a) Turn the Exciter 'OFF' and remove and replace P.C. Assembly 1A2A8. See Figures 5.2.1.1, 5.4.2.1.1 and 5.4.2.2.1 thru 5.4.2.4.1.

b) Turn 'ON' Exciter and repeat 'BITE TEST'. Upon completion of a successful test return Exciter to operational status.

c) Return failed P.C. Assembly 1A2A8 to factory for repair.

5.4.2.4 SYNTHESIZER FAULT

This is an indication of a failure on the Synthesizer Module 1A2A2.

a) Turn the Exciter 'OFF' and remove and replace Module. See Figure 5.4.1.3 and 5.4.1.4.

b) Turn 'ON' Exciter and repeat 'BITE TEST'. Upon completion of a successful test, return Exciter to operational status.

c) Return failed Module 1A2A2 to factory for repair.

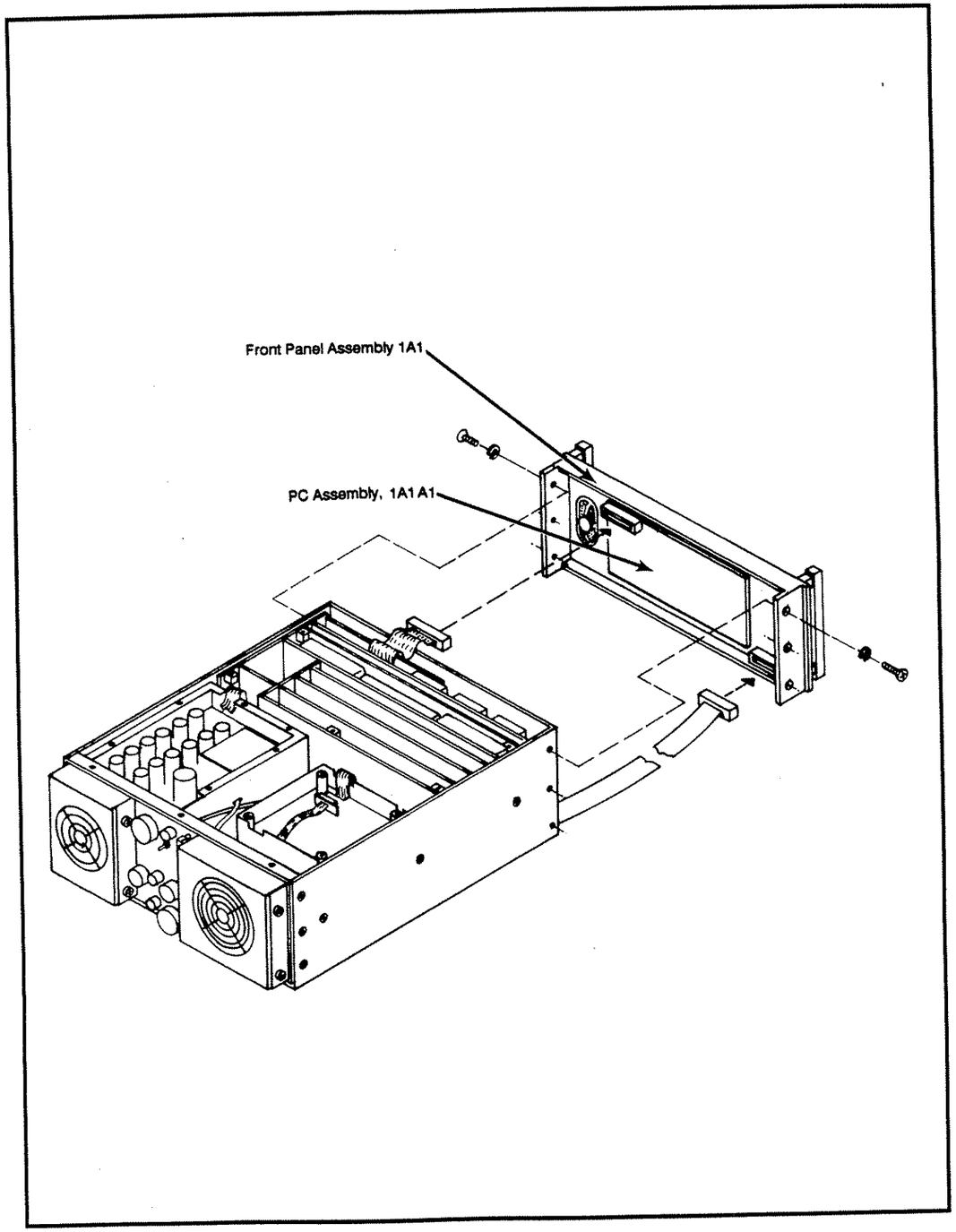

Figure 5.4.2.1.1 Front Panel (1A1) Removal.

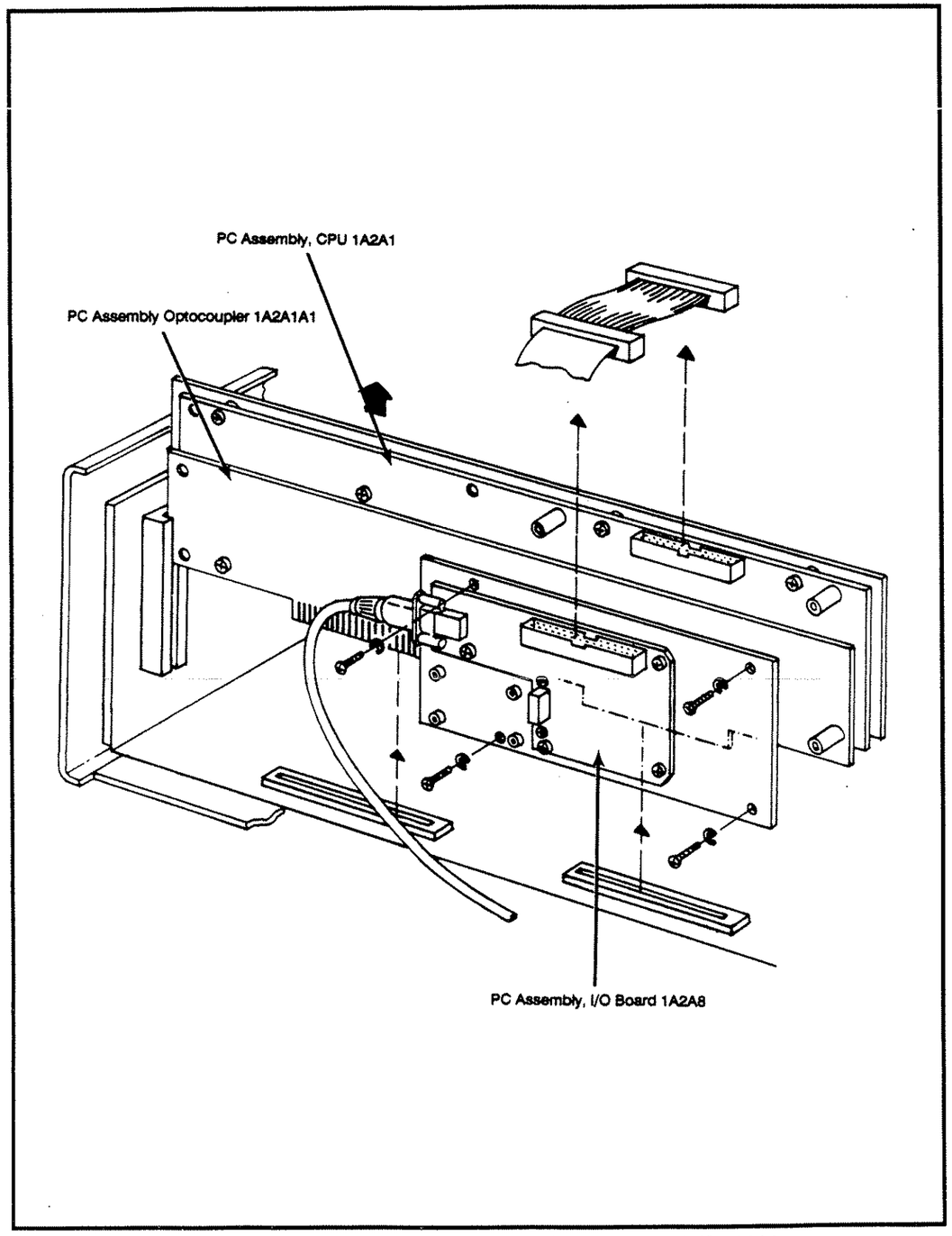

Figure 5.4.2.2.1 Removall/Replacement of CPU 1A2A1 and I/O 1A2A8.

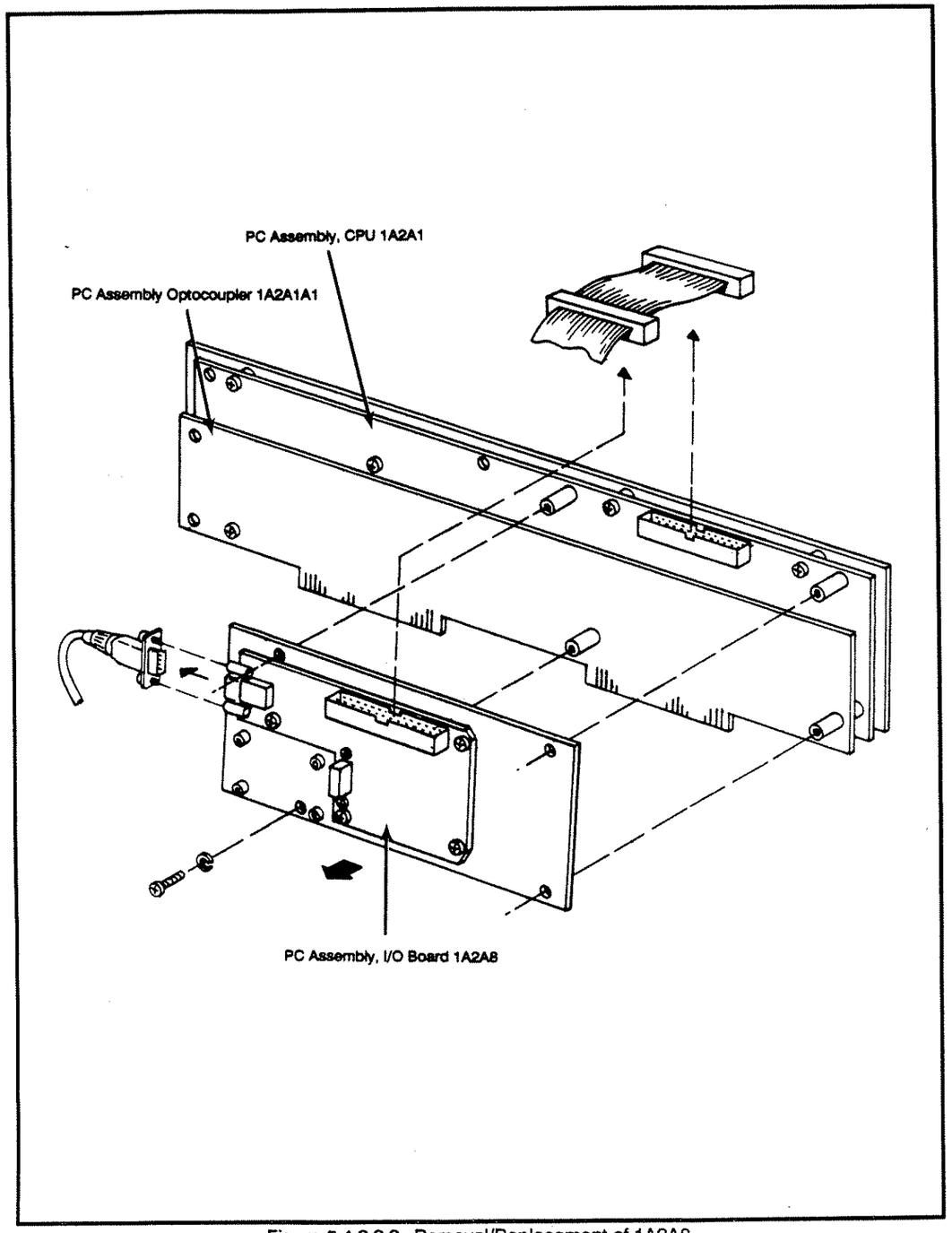

Figure 5.4.2.2.2 Removal/Replacement of 1A2A8.

5.4.2.5 POWER SUPPLY FAULT

This indicates a failure of the 1A5A1A1 +5 VDC analog circuit. The failures are:

a) +5 VDC analog 'OVER' voltage.
b) +5 VDC analog 'UNDER' voltage.

a) +5 VDC analog 'OVER' voltage.

1) Turn 'OFF' Exciter and remove and replace P.C. Assembly 1A5A1A1 (switching regulator board). See Figures 5.4.1.3, 5.4.1.4, and 5.4.2.4.1 thru 5.4.2.4.4.

2) Turn 'ON' Exciter; observe Power Supply Fault LEDs (should be 'OFF'); run 'BITE TEST'. Upon completion of successful test, return Exciter to operational status. Return P.C. Assembly 1A5A1A1 to factory for repair. If above power supply LEDs are 'ON', turn 'OFF' Exciter and remove and replace P.C. Assembly 1A5A1A2 (Control Logic Board). See Figure 5.4.2.4.3.

3) Turn 'ON' Exciter; observe Power Supply Fault LEDs (should be 'OFF'); run 'BITE TEST. Upon completion of successful test, return Exciter to operational status. Return P.C. Assembly 1A5A1A2 to factory for repair.

b) +5 VDC analog 'UNDER' voltage.

1) Turn 'OFF' Exciter and remove ribbon connector to Filter Module 1A3J4.

2) Turn 'ON' Exciter and observe Power Supply Fault LEDs. If LEDs are 'OFF', a short in the 1A3 Filter Module on the +5 VDC analog line is indicated. Remove and replace 1A3 Module. (See Figure 5.4.2.4.4.) If LEDs are 'ON', trouble in other circuitry is indicated. Turn 'OFF' Exciter and reinstall connector to 1A3J4. Go on to step 3.

3) Remove Front End P.C. Assembly 1A2A5. Turn 'ON' Exciter and observe Power Supply Fault LEDs. If LEDs are 'OFF', a short in the 1A2A5 +5 VDC analog circuitry is indicated; replace 1A2A5. If LEDs are 'ON', trouble in other circuitry is indicated. Turn 'OFF' Exciter and reinstall 1A2A5. Go on to step 4.

4) Remove IF P.C. Board Assembly 1A2A4. Turn 'ON' Exciter and observe Power Supply Fault LEDs. If LEDs are 'OFF', a short in the 1A2A4 +5 VDC analog circuitry is indicated; replace 1A2A4. If LEDs are 'ON', trouble in other circuitry is indicated. Turn 'OFF' Exciter and reinstall 1A2A4. Go on to step 5.

5) Remove Audio P.C. Board Assembly 1A2A3. Turn 'ON' Exciter and observe Power Supply Fault LEDs. If LEDs are 'OFF', a short in the 1A2A3 +5 VDC analog circuitry is indicated; replace 1A2A4. If LEDs are 'ON', trouble in other circuitry is indicated. Turn 'OFF' Exciter and reinstall 1A2A3. Go on to step 6.

6) Remove and replace D.C. Power Supply Switching Regulator Board 1A5A1A1. Turn 'ON' Exciter and observe Power Supply Fault LEDs. If LEDs are 'OFF', this indicates that 1A5A1A1 should be sent to the factory for repair. If LEDs are 'ON', trouble in other circuitry is indicated. Turn 'OFF' Exciter and go to step 7.

7) Remove and replace Control Logic P.C. Board Assembly 1A5A1A2. Turn 'ON' Exciter and observe Power Supply Fault LEDs. If LEDs are 'OFF', this indicates that 1A5A1A2 should be sent to the factory for repair. If LEDs are 'ON', trouble could be on Mother Board 1A2A7 or in the interconnecting ribbon cables. Turn Exciter 'OFF' and use normal troubleshooting procedures to locate the short on the +5 VDC line throughout the Exciter.

Other Power Supply Fault LED's will be discussed in section 5.5.

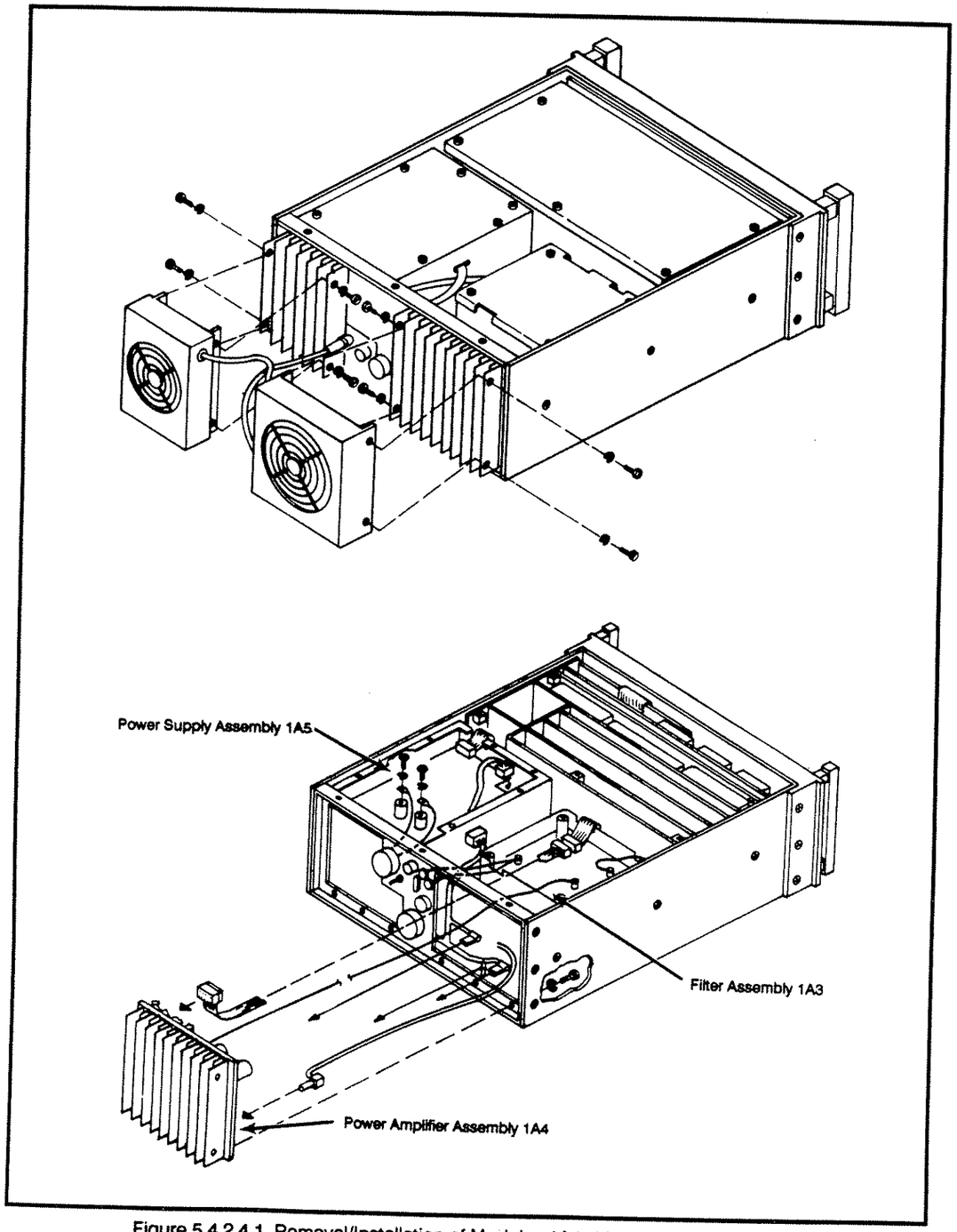

Figure 5.4.2.4.1 Removal/Installation of Modules 1A4, 1A5, and Optional Fans.

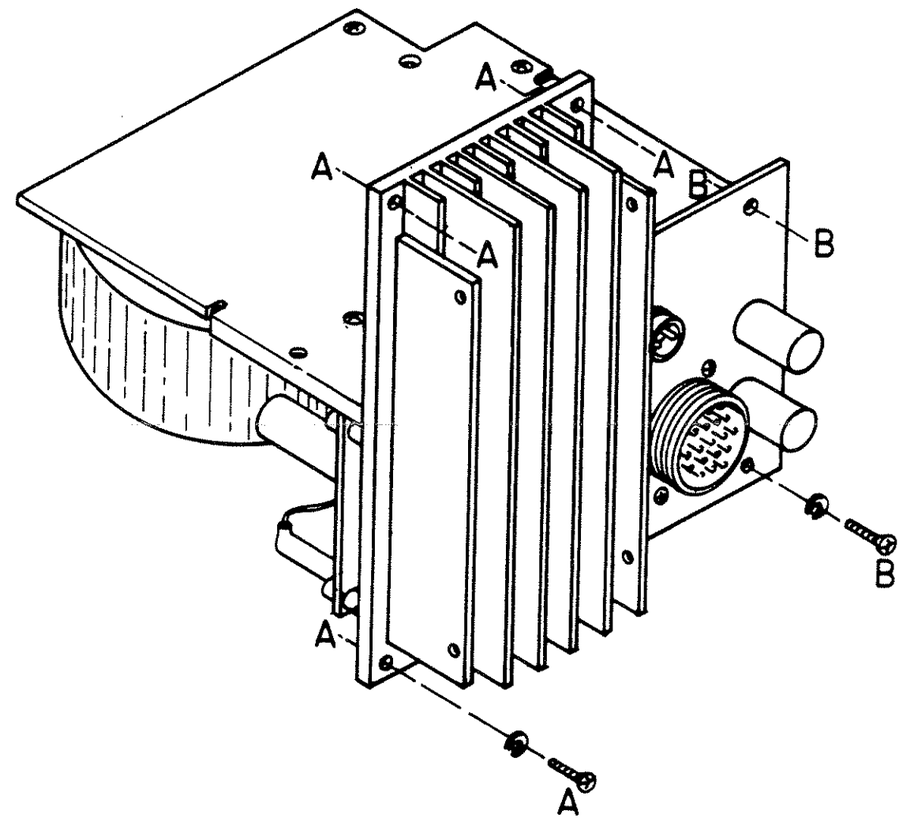

Figure 5.4.2.4.2 Removal/Installation of AC Power Supply Module 1A5A2.

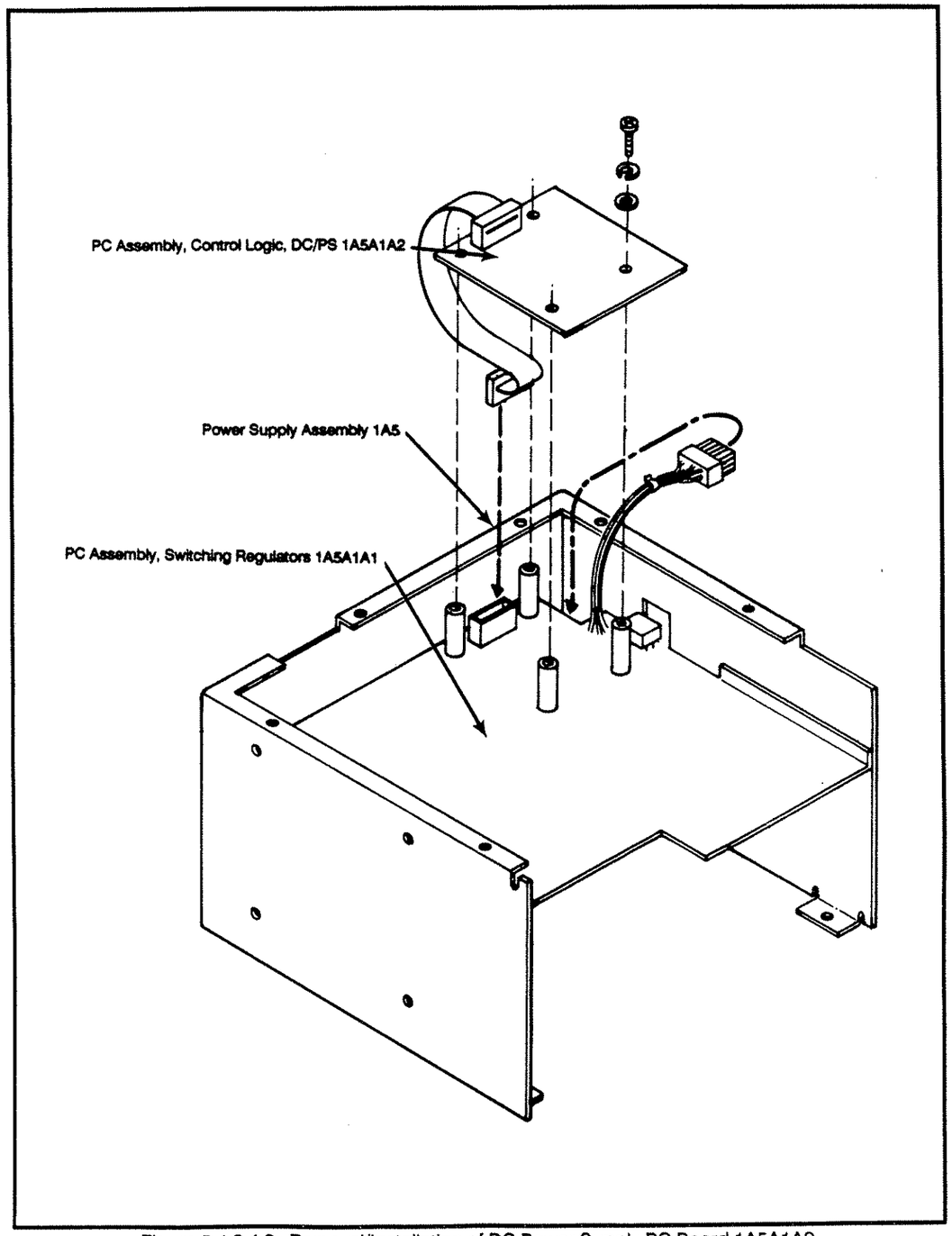

Figure 5.4.2.4.3 Removal/Installation of DC Power Supply PC Board 1A5A1A2.

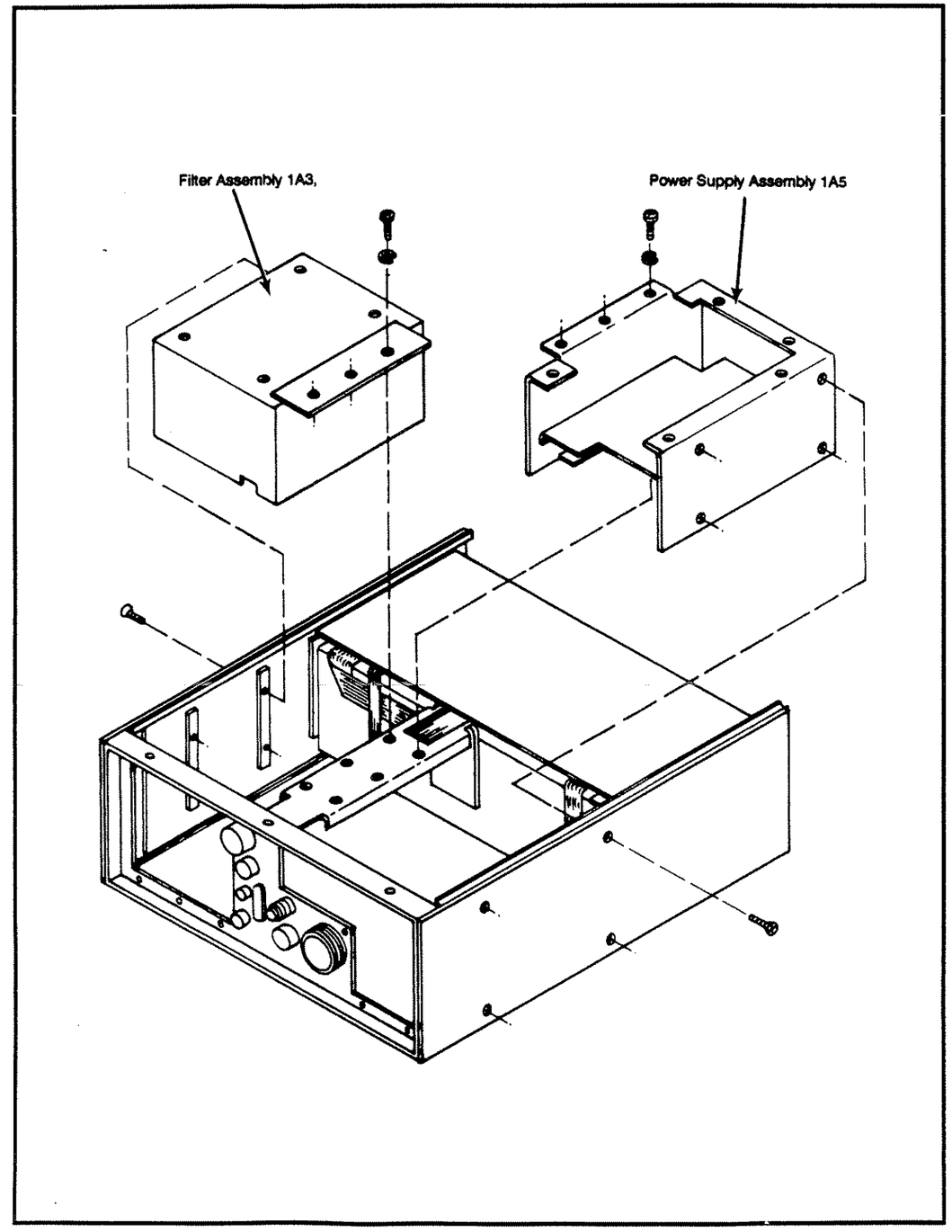

Figure 5.4.2.4.4 Removal/Installation of Module 1A3 and 1A5.

5.4.3 SIGNAL MODULES

5.4.3.1 AUDIO FAULT

This indicates a failure on the Audio P.C. Assembly 1A2A3.

a) Turn Exciter 'OFF' and remove and replace 1A2A3. See Figures 5.4.1.3 and 5.4.1.4.

b) Turn Exciter 'ON'. Repeat 'BITE TEST'. Upon completion of successful test, return Exciter to operational status. Return failed 1A2A3 to factory for repair.

5.4.3.2 IF FAULT

This indicates a failure on the IF P.C. Assembly 1A2A4.

a) Turn Exciter 'OFF' and remove and replace 1A2A4. See Figures 5.4.1.3 and 5.4.1.4.

b) Turn Exciter 'ON'. Repeat 'BITE TEST'. Upon completion of successful test, return Exciter to operational status. Return failed 1A2A4 to factory for repair.

5.4.3.3 FRONT END FAULT

This indicates a failure on the Front End P.C. Assembly 1A2A5.

a) Turn Exciter 'OFF' and remove and replace 1A2A5. See Figures 5.4.1.3 and 5.4.1.4.

b) Turn Exciter 'ON'. Repeat 'BITE TEST'. Upon completion of successful test, return Exciter to operational status. Return failed 1A2A5 to factory for repair.

5.4.3.4 POWER AMP FAULT

This indicates a failure on the Power Amplifier Module 1A4.

a) Turn Exciter 'OFF' and remove and replace 1A4. See Figures 5.4.1.3, 5.4.1.4 and 5.4.2.4.1.

b) Turn Exciter 'ON'. Repeat 'BITE TEST'. Upon completion of successful test, return Exciter to operational status. Return failed 1A4 to factory for repair.

5.4.3.5 FILTER MODULE FAULT

This indicates a failure on the Filter Module Assembly 1A3.

a) Turn Exciter 'OFF' and remove and replace 1A3. See Figures 5.4.1.3, 5.4.1.4, 5.4.2.4.1, and 5.4.2.4.4.

b) Turn Exciter 'ON'. Repeat 'BITE TEST'. Upon completion of successful test, return Exciter to operational status. Return failed 1A3 to factory for repair.

5.5 TROUBLE SHOOTING WITH SELF-SURVEILLANCE BITE

5.5.1 DC TO DC POWER SUPPLY 1A5A1/1A5A1A1/1A5A1A2

Reference Table 5.5.1.

5.5.2 AC POWER SUPPLY 1A5A2/1A5A2A1/1A5A2A2

Reference Table 5.5.1

5.5.3 SELECT/DISTRIBUTION REFERENCE AMPLIFIER 1A2A6

Reference Table 5.5.2

	DC TO DC POWER SUPPLY 1A5A1										AC POWER SUPPLY 1A5A2				POSSIBLE TROUBLE	CORRECTIVE ACTION
LED's X=ON BLANK=OFF	READY	FAULT	5D		5A		12 V		28 V		READY	OVER VOLTAGE	UNDER VOLTAGE	OVER CURRENT		
			OVER	UNDER	OVER	UNDER	OVER	UNDER	OVER	UNDER						
1	X										X				No Trouble	No Action Required
2		X								X	X				1. 1A5A1A1 F1 Open. 2. Short in the Transceiver on +28 V line.	Replace fuse as required. If fuse opens again, use normal trouble shooting procedures to locate and repair short.
3															1. No AC power. 2. Open AC Fuses 1A5A2 F1 and F2. 3. Open 1A5A2 F3.	1. Check for AC input. 2. Replace F1 and F2. If fuses open again, remove and replace 1A5A2 power supply. 3. Replace F3. If it opens again, replace power supply.
4											No AC power supply installed or using only DC to DC supply.				1. No DC power. 2. 1A6 F1 open.	1. Check for +28 VDC input. 2. Replace F1. If it opens again, remove and replace 1A5A1 power supply.
5												X			1A5A2 AC power supply.	Replace 1A5A2 assembly.
6													X		1A5A2 AC power supply.	Replace 1A5A2 assembly.
7														X	1. 1A5A2 AC power supply. 2. Short on +28 V line in DC power supply or Radio.	1. Remove 1A5A1 F1 and P3 to radio and check. Use normal trouble shooting procedures to locate and repair short. 2. Replace 1A5A2 assembly.
8		X		X	X			X			X				U5 and associated circuitry in 1A5A1.	Replace 1A5A1 assembly.
9		X	X			X		X			X				U2 and associated circuitry in 1A5A1.	Replace 1A5A1 assembly.
10		X		X		X	X				X				U1 and associated circuitry in 1A5A1.	Replace 1A5A1 assembly.
11		X						X		X	No AC power supply installed or using only DC to DC supply.				DC power input low.	Correct DC input voltage.
12		X							X		No AC power supply installed or using only DC to DC supply.				DC power input high.	Correct DC input voltage.
13		X				X					X				1. U5 and associated circuitry in 1A5A1. 2. Short on +5 V analog line in Transceiver.	1. Replace 1A5A1 assembly. 2. Use normal trouble shooting procedures to locate and repair short.
14		X		X							X				1. U2 and associated circuitry in 1A5A1. 2. Short on +5 V digital line in Transceiver.	1. Replace 1A5A2 assembly. 2. Use normal trouble shooting procedures to locate and repair short.
15		X						X			X				1. U1 and associated circuitry in 1A5A1.	1. Replace 1A5A2 assembly. 2. Use normal trouble shooting procedures to locate and repair short.

Table 5.5.1 DC to DC and AC Power Supply Troubleshooting.

SELECT/DISTRIBUTION REFERENCE AMPLIFIER
1A2A6

NOTE: S1A, S1B, and S1C are accomplished by a jumper plug. Normal factory setting is INTERNAL ONLY. However, this value can be changed by the user to INTERNAL OUT or EXTERNAL IN.

LED's X=ON BLANK=OFF	INT ONLY	INT OUT	EXT IN	FAULT	POSSIBLE TROUBLE	CORRECTIVE ACTION
1	X				Normal indication for factory setting.	No action required.
2	X			X	1. No input to 1A2A6. 2. No output from 1A2A6.	1. Use oscilloscope and check input and output on 1A2A7 Mother board J11 pins 5 and 2. Replace as required 1A2A9 or 1A2A6.
3		X			Normal indication for this setting.	No action required.
4		X		X	1. No input to 1A2A6. 2. No output from 1A2A6.	1. Use oscilloscope and check input and output on 1A2A7 Mother board J11 pins 5, 4, and 2. Replace as required 1A2A9 or 1A2A6.
5			X		Normal indication for this setting. Input is from an external frequency standard.	No action required.
6			X	X	1. No input from external frequency standard. 2. No output from 1A2A6.	1. Use oscilloscope and check input from External Standard at J11 pin 4 and check output at J11 pin 2. Replace as required External Standard or 1A2A6.

Table 5.5.2 Select/Distribution Reference Amplifier Troubleshooting.

5.6 TEST EQUIPMENT REQUIRED OR EQUIVALENT

Multimeter	Simpson 260
Wattmeter, thruline with 250 Watt, 2-30 MHz element	Bird Model 43
Power Supply (optional for DC only), 0-40 Volt @ 30 Amp	HP-6269
Oscilloscope, 100 MHz bandwidth	Tektronix Model 2235
Coaxial Resistor, 50 ohm, 150 Watt (3 each)	Bird Model 8135
Audio Generator (2 each)	Leader Model LAG-120B
Audio Voltmeter	Leader Model LMV-181A
Frequency Counter	Systron-Donner Model 6050 with option 12
RF Voltmeter	Boonton 92EA
100/1 Voltage Divider	Boonton 91-7
Tee Adapter	Boonton 91-14A
Digital Multimeter	Leader LDM-853A
Microphone	P/N 8076000602
CW Key	P/N 5024000994
Coaxial Cable (4 each)	RG-58/U with BNC Connectors
Adaptor, N to BNC (3 each)	UG-201/U
Adaptor, UHF to BNC (2 each)	UG-273/U
'T' Connector BNC (2 each)	UG-274/U
Audio Interface Cable	P/N 8076004594
Remote Key Switch	Any model one (1) pole toggle switch

WARNING: The adjustments called out in the following alignments are all that should be attempted. Any other adjustments not called out are factory adjustments and cannot be done in the exciter.

5.7 EXCITER ALIGNMENT and CHECKS

See Figure 5.7.1 for Test Equipment Connections. Remove top and bottom covers. Once inside Exciter remove 1A3 Filter Module cover (see Figures 5.2.1.1 and 5.4.1.3).

General: Connect coaxial cable from J4 (Antenna) to Thruline Wattmeter and 50 ohm load. Connect RF Voltmeter and Oscilloscope to 50 ohm load. Connect microphone to J3 and CW key to J1.

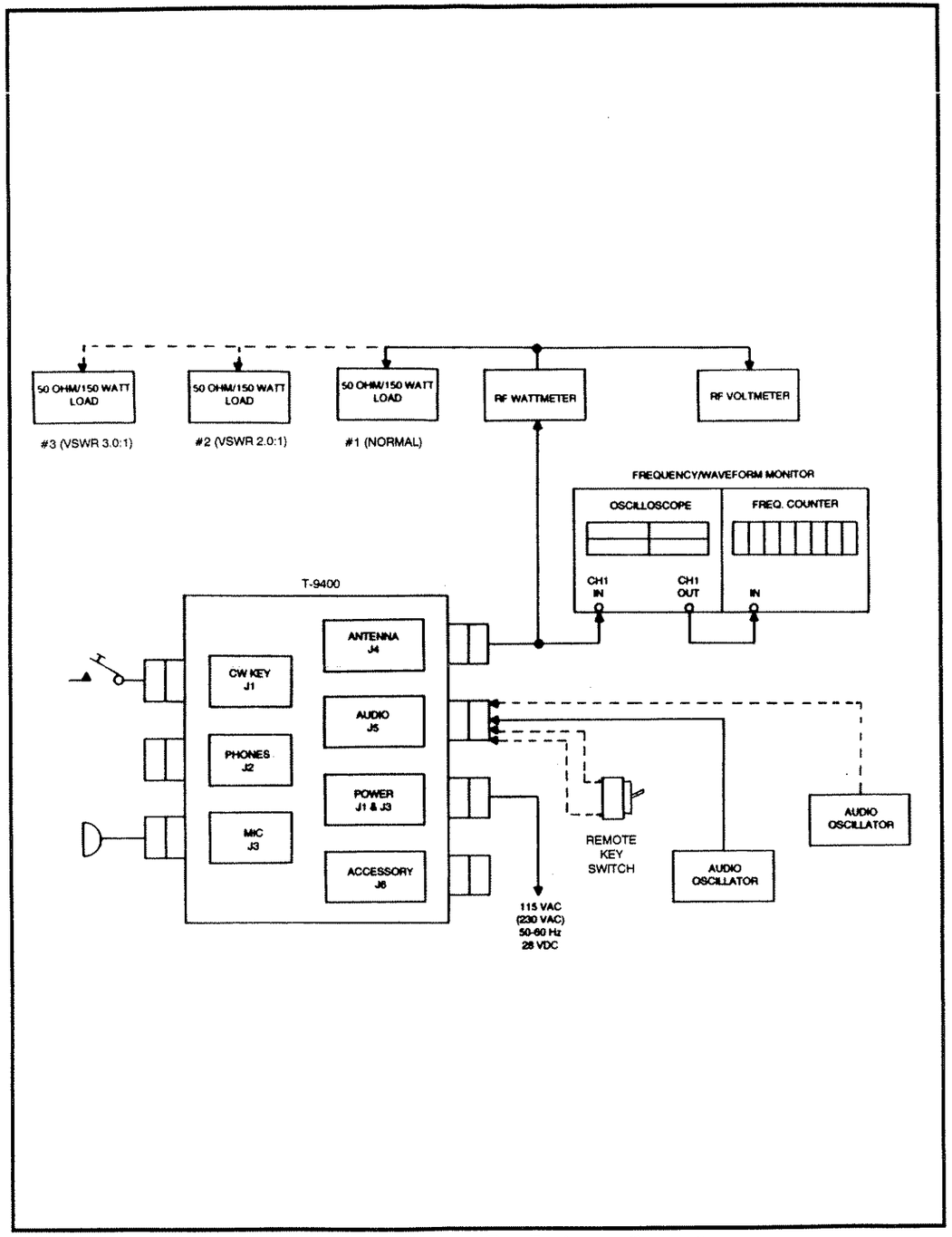

Figure 5.7.1 Exciter Alignment Test Equipment Connections.

VRMS	Vpeak	Vp-to-p	WATTS ACROSS 50 OHMS
32.00	45.25	90.50	20.48
33.00	46.66	93.32	21.78
34.00	48.08	96.15	23.12
35.00	49.49	98.98	24.50
36.00	50.90	101.81	25.92
37.00	52.32	104.64	27.38
38.00	53.73	107.46	28.88
39.00	55.15	110.29	30.42
40.00	56.56	113.12	32.00
41.00	57.97	115.95	33.62
42.00	59.39	118.78	35.28
43.00	60.80	121.60	36.98
44.00	62.22	124.43	38.72
45.00	63.63	127.26	40.50
46.00	65.04	130.09	42.32
47.00	66.46	132.92	44.18
48.00	67.87	135.74	46.08
49.00	69.29	138.57	48.02
50.00	70.70	141.40	50.00
51.00	72.11	144.23	52.02
52.00	73.53	147.06	54.08
53.00	74.94	149.88	56.18
54.00	76.36	152.71	58.32
55.00	77.77	155.54	60.50
56.00	79.18	158.37	62.72
57.00	80.60	161.20	64.98
58.00	82.01	164.02	67.28
59.00	83.43	166.85	69.62
60.00	84.84	169.68	72.00
61.00	86.25	172.51	74.42
62.00	87.67	175.34	76.88
63.00	89.08	178.16	79.38
64.00	90.50	180.99	81.92
65.00	91.91	183.82	84.50
66.00	93.32	186.65	87.12
67.00	94.74	189.48	89.78
68.00	96.15	192.30	92.48
69.00	97.57	195.13	95.22
70.00	98.98	197.96	98.00
71.00	100.39	200.79	100.82
72.00	101.81	203.62	103.68
73.00	103.22	206.44	106.58
74.00	104.64	209.27	109.52
75.00	106.05	212.10	112.50
76.00	107.46	214.93	115.52
77.00	108.88	217.76	118.58
78.00	110.29	220.58	121.68
79.00	111.71	223.41	124.82
80.00	113.12	226.24	128.00
81.00	114.53	229.07	131.22
82.00	115.95	231.90	134.48
83.00	117.36	234.72	137.78
84.00	118.78	237.55	141.12
85.00	120.19	240.38	144.50
86.00	121.60	243.21	147.92
87.00	123.02	246.04	151.38
88.00	124.43	248.86	154.88
89.00	125.85	251.69	158.42
90.00	127.26	254.52	162.00

Table 5.7.1 Power vs Voltage.

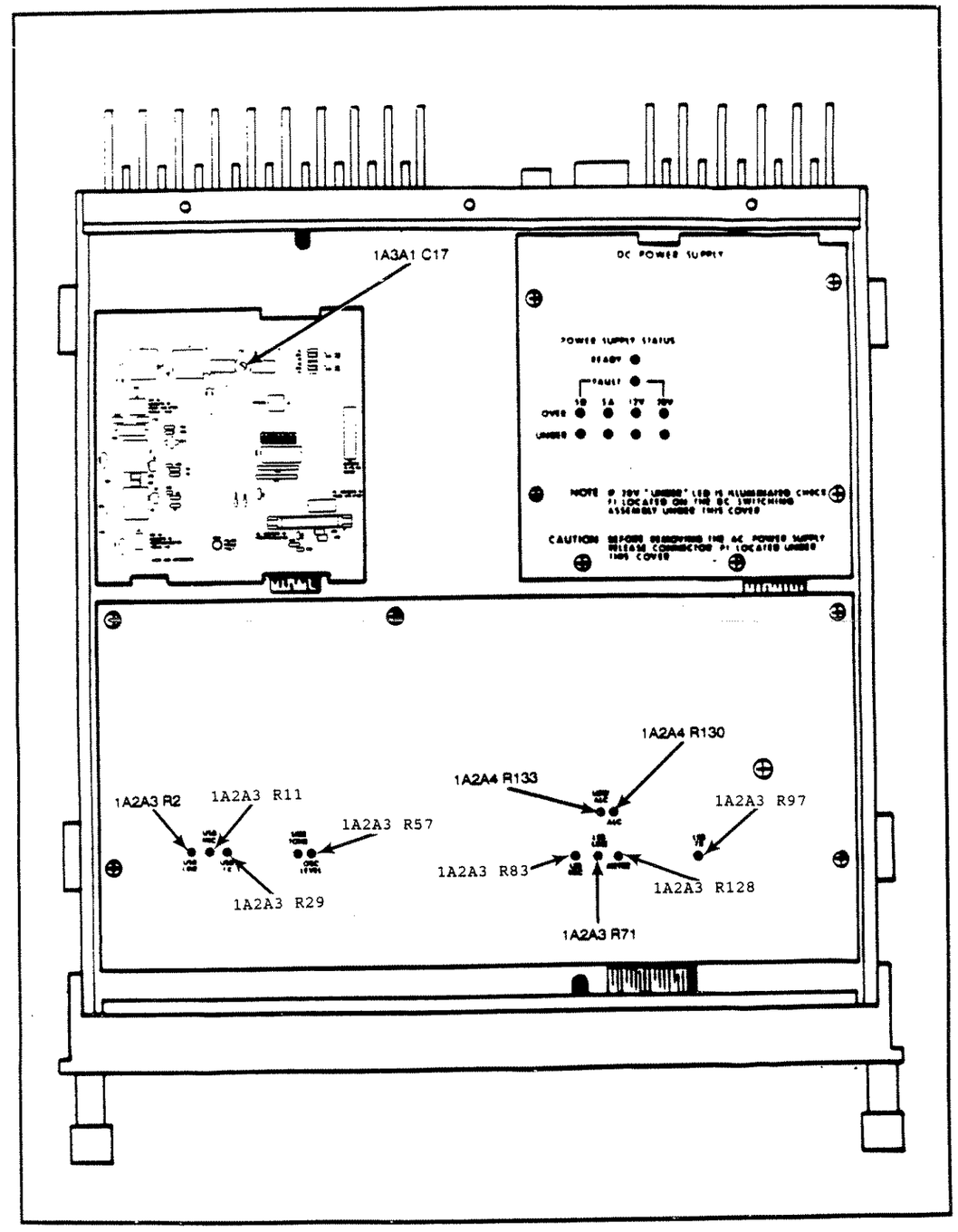

Figure 5.7.2 Alignment Adjustment Locations.

5.7.1 AUTOMATIC LEVEL CONTROL (ALC)

a) Set Exciter to 1.6 MHz, CW mode, 125 Watt level.

b) Depress the CW key and adjust 1A2A4 R130 ALC until output power is 125 Watts/79 VRMS or 223 V peak to peak (see Table 5.7.1 and Figure 5.7.2), release CW Key.

c) Change Exciter to 29.999 MHz and depress CW Key. Adjust C17 on 1A3A1 (Filter Module) for output power of 125 Watts/79 VRMS or 223 V peak to peak (see Table 5.7.1 and Figure 5.7.2), release CW Key.

NORMAL: Go on to step d).
ABNORMAL: Remove and replace the following LRUs one at a time and re-accomplish steps a) through c) each time:

AUDIO ASSEMBLY 1A2A3.
IF/FILTER ASSEMBLY 1A2A4
FRONT END ASSEMBLY 1A2A5
POWER AMPLIFIER MODULE 1A4
FILTER MODULE 1A3

d) Check the output power of the Exciter at 1 MHz increments from 1.6 to 29.6 MHz, and at 29.9999 MHz. The output at all frequencies should be between 112.5 Watts/75 VRMS and 137.7 Watts/83 VRMS (see Table 5.7.1). Set Exciter frequency to 1.6 MHz. Select 'FWD' meter on Front Panel. Depress CW Key and note that Operation Display indicates 100 to 150 Watts on Bar Graph. Unkey and select 'ALC' meter. Depress CW Key and meter should display approximately 120 on the Bar Graph. Unkey and select 'RFLD' meter. Depress CW Key and meter should display zero (0) on the Bar Graph. Unkey and select 'FWD' meter.

NORMAL: Go on to test 5.7.2.
ABNORMAL: Remove and replace the following LRUs one at a time and re-accomplish step d) each time:

AUDIO ASSEMBLY 1A2A3.
FRONT END ASSEMBLY 1A2A5
POWER AMPLIFIER MODULE 1A4
FILTER MODULE 1A3

5.7.2 LOW POWER AUTOMATIC LEVEL CONTROL (ALC)

a) Set Exciter power level to 65 Watts and mode to CW.

b) Depress the CW key and adjust 1A2A4 R133 LOW ALC until output power is 65 Watts/57 VRMS or 161 V peak to peak (see Table 5.7.1 and Figure 5.7.2).

NORMAL: Go on to step c).
ABNORMAL: Remove and replace the IF/FILTER Assembly 1A2A4 and re-accomplish steps a) and b).

c) Check the output power of the Exciter at 1 MHz increments from 1.6 to 29.6 MHz, and at 29.9999 MHz. The output at all frequencies should be between 55 and 59 VRMS (see Table 5.7.1).

NORMAL: Go on to test 5.7.3.
ABNORMAL: Remove and replace the following LRUs one at a time and re-accomplish step c) each time:

FRONT END ASSEMBLY 1A2A5
POWER AMPLIFIER MODULE 1A4
FILTER MODULE 1A3

5.7.3 AUTOMATIC CARRIER CONTROL (ACC)

NOTE: This is an Exciter operational check. The ACC Level is factory set.

a) Set Exciter to 1.6 MHz, AM Mode, 125 Watt level. Connect test equipment as in 5.7).

b) Depress CW Key and verify that output power is between 35 Watts/42 VRMS or 119 V peak-to-peak and 60 Watts/55 VRMS or 156 V peak-to-peak (see Table 5.7.1). Unkey Exciter.

c) Check the Exciter output power in 1 MHz increments from 1.6 to 29.6 and at 29.999 MHz. The power out should be between 35 and 60 Watts at all frequencies.

NORMAL: Go on to 5.7.4. ACC circuitry is operating normally.
ABNORMAL: Remove and replace the IF/FILTER Board Assembly 1A2A4 and re-accomplish steps a) through c).

5.7.4 VSWR AUTOMATIC LEVEL CONTROL (ALC)

NOTE: This is an Exciter operational check. The ALC Level is factory set.

a) Set Exciter to 1.6 MHz, CW Mode, 125 Watt level. Connect test equipment as in 5.7.

b) Depress CW Key and verify that output power is between 112.5 and 137.7 Watts measured on Wattmeter. Unkey Exciter.

c) Using a 'T' Connector, connect a second 50 ohm load in parallel with the original 50 ohm load (See Figure 5.7.1). Key the Exciter, the Wattmeter should read within 10 Watts of the reading obtained in step b). Unkey the Exciter.

NOTE: Due to the two (2) 50 ohm loads in parallel the impedance that the test equipment and the Exciter see is no longer 50 ohms, therefore, the Wattmeter readings are approximate. This test simulates the Exciter working into a VSWR of 2.0:1.

d) Using a second 'T' Connector, connect a third 50 ohm load in parallel with the other two loads. Key the Exciter. The Wattmeter should read less than 80 Watts. Unkey the Exciter.

NOTE: With three (3) 50 ohm loads in parallel the impedance that the test equipment and the Exciter see is no longer 50 ohms, therefore, the Wattmeter readings are approximate. This test simulates the Exciter transmitting into a VSWR of 3.0:1.

e) Disconnect all three (3) 50 ohm loads from the Wattmeter causing the Exciter to transmit into an open termination. Key the Exciter. The Wattmeter stabilizes at less than 25 Watts.

NORMAL: Go on to 5.7.5. The Exciter VSWR ACC circuitry is working properly.
ABNORMAL: Remove and replace the IF Board Assembly 1A2A4 and re-accomplish steps b) through e).

5.7.5 AM MODULATION

NOTE: This is an Exciter operational check. The AM modulation is factory set.

a) Set Exciter to 1.6 MHz, AM mode, and power to 125 Watt level. Connect test equipment per section 5.7.

b) Key the Exciter with microphone Push-to-Talk (PTT) switch and speak in a normal tone of voice. Amplitude Modulation of the RF envelope should be displayed on the Oscilloscope with a varying peak-to-peak of up to 220 V while speaking.

NORMAL: Go on to 5.7.6. The AM Modulation circuitry is operating properly.
ABNORMAL: Use the Oscilloscope to check the microphone input to Audio Board Assembly 1A2A3.

1) While speaking into the microphone check for a varying audio signal of up to 200 mV peak-to-peak on the Mother Board 1A2A7 P9 pin 4 and J5 pin 1. If there is no audio signal at these points use normal trouble shooting techniques, and check for faulty microphone or circuit path from Front Panel Microphone Connector J3.

2) If preceding checks are normal remove and replace Audio Board 1A2A3 and re-accomplish step b).

5.7.6 USB/LSB MODULATION

NOTE: This is an Exciter operational check. The modulation level is factory set.

a) Set Exciter to 1.6 MHz, USB mode, and power to 125 Watt level. Connect test equipment per section 5.7.

b) Key the Exciter with microphone 'PTT' switch and speak in a normal tone of voice. RF should be displayed on Oscilloscope with a varying peak-to-peak up to 220 V while speaking into microphone. Unkey Exciter.

c) Set Exciter mode to LSB, depress microphone 'PTT' switch and speak in a normal tone of voice. Oscilloscope should have same display as in step b). Unkey Exciter.

NORMAL: Go on to 5.7.7.
ABNORMAL: Use the same procedure as in ABNORMAL AM Modulation, section 5.7.5.

5.7.7 EXCITER OUTPUT FREQUENCY

a) Set Exciter to 1.6 MHz, AM mode, and power to 125 Watt level. Connect test equipment per section 5.7. Connect frequency counter to vertical output connector on Oscilloscope.

b) Key the Exciter with microphone 'PTT' and observe the frequency of the output. This should be within one (1) part per million of that selected on the Front Panel of the Exciter. Unkey Exciter.

c) Repeat step b) at the following frequencies:

2.22222
3.33333
4.44444
5.55555
6.66666
7.77777
8.88888
9.99999
10.00000
11.11111
20.00000

NORMAL: If the above frequencies are all within tolerance stated in step b) go on to 5.7.8.

ABNORMAL: Connect Oscilloscope and Frequency Counter to Exciter Mother Board, 1A2A7 J12 pin 6 ('TCXO' out). The frequency must be 5.0 MHz ±5.0 Hz.

1) If this frequency checks good, remove and replace Synthesizer Assembly 1A2A2 and re-accomplish steps b) and c).

2) If 'TCXO' frequency is out of tolerance: first remove the Exciter module cover, then remove the 'TCXO' top cover screw (see Figures 5.4.1.3 and 5.4.1.4) and adjust trimmer in the 'TCXO' to the frequency stamped on the cover. This adjustment should only be done with 'TCXO' at room temperature (25 C / 75 F). If unable to adjust, or 'TCXO' drifts more than 10 Hz, remove and replace the 'TCXO' (1A2A9) and re-accomplish steps b) and c).

5.7.8 USB/LSB TRANSMIT LINE LEVEL

NOTE: This 600 ohm remote audio level has been factory aligned to allow the Exciter to provide rated RF output power via the Audio Board (1A2A3) Compressor Circuit for a 0 dBm 1.5 kHz audio input. This circuit nominally operates ±10 dB for rated RF output power.

a) Set Exciter to 1.6 MHz, LSB mode and power to 125 Watt level. Connect one (1) Audio Generator to remote audio connector J5 pins H and J (USB AUDIO C) and another Audio Generator to J5 pins L and M (LSB AUDIO A). Adjust both Audio Generators to 1.5 kHz, 0 dBm output. Connect J5 pins G and F to remote key switch (see Figure 5.7.1). On Exciter Front Panel select 'LINE AUDIO' menu and select 'LSB-A*' and 'USB-C*' keys. Depress 'MIC SEL' key until 'MIC-O' is displayed on the Operational Display.

b) Key the Exciter with remote key switch and check RF LSB output power. It should read between 112.5 Watts/75 VRMS and 125 Watts/83 VRMS. Ideally it should be 125 Watts/79 VRMS (see Table 5.7.1). Unkey the Exciter, set mode to USB and depress 'MIC SEL' key until 'MIC-O' is displayed. Key the Exciter and check RF USB output power. It should read the same as LSB RF power above. Vary the Audio Generator to -10 dB and +10 dB. RF output power should remain constant as Audio Generator is varied. Return Audio Generator to 0 dBm and unkey Exciter.

NORMAL: Go on to step c). Transmit line level and compressor circuits are operating properly.

ABNORMAL: Set Exciter and test equipment as in 5.7.8 a). Remove Exciter module cover and set 1A2A3 S1-3 and S2-3 to 'OFF' position (see Figure 5.8.12). Key the Exciter and adjust 1A2A3 R71 (LSB XMIT LINE LEVEL) for 125 Watts/79 VRMS. Unkey Exciter and select USB mode and 'MIC-O', key the Exciter and adjust 1A2A3 R2 (USB XMIT LINE LEVEL) for 125 Watts/79 VRMS. After accomplishing above alignments, reset S1-3 and S2-3 to 'ON' and re-accomplish step b).

1) If unable to accomplish above alignment use normal troubleshooting procedures to check audio lines A and C from J5 to Audio Board by signal tracing on the PC Assembly Mother Board 1A2A7 (see Figure 5.8.3).

2) If this checks good remove and replace Audio Board Assembly (1A2A3) making sure that the replacement 1A2A3's S1 and S2 are properly set (see Figure 5.8.12). Re-accomplish step b).

c) Disconnect both Audio Generators and reconnect one (1) generator to J5 pins A and C (LSB AUDIO B) and the other generator to J5 pins S and T (USB AUDIO D). On Exciter Front Panel select 'LINE AUD' menu and then select 'LSB-B*' and 'USB-D*' keys. Select LSB mode and depress 'MIC SEL' key until 'MIC-O' is displayed on the Operational Display.

d) Key the Exciter with remote key switch and verify that Exciter is still producing full power as in step b). Unkey Exciter, select USB mode and depress 'MIC SEL' key until 'MIC-O' is displayed. Key Exciter and verify full power as in step b).

NORMAL: Go on to section 5.7.9. All transmit lines are operating properly.

ABNORMAL: This is not an alignment problem as there is only one (1) alignment for each pair of audio input lines and the Exciter passed test b). Accomplish the following to isolate and correct the problem:

1) Signal trace the B and D audio lines from J5 to Audio Board inputs on the Mother Board (see Figure 5.8.3).

a) If signal tracing indicates Audio is at the Audio Board inputs remove and replace Audio Board 1A2A3 and re-accomplish step d). If step d) is NORMAL go on to 5.7.9. If step d) is ABNORMAL, go on to step 2) below.

2) Signal trace the control signals (LSB A/B AUDIO SELECT and USB C/D AUDIO SELECT) from CPU Assembly 1A2A1 to Audio Board 1A2A3 on the Mother Board 1A2A7 (see Figure 5.8.3).

NORMAL: Observe control signal levels changing as the following are selected on the Exciter Front Panel; 'LSB-A*', 'USB-C*' and then 'LSB-B*', USB-D*'.

ABNORMAL: Remove and replace the following LRU's one (1) at a time until the problem is corrected:

CPU ASSEMBLY 1A2A1
FRONT PANEL ASSEMBLY 1A1

5.7.9 TRANSMIT GAIN CONTROL (TGC SETUP)

NOTE: This is only an operational check of the IF Assembly's (1A2A4) TGC Circuitry. There are no adjustments.

a) Set Exciter to 29.999 MHz, ISB mode, and power to 100 Watt level. Depress 'MIC SEL' key until 'MIC-O' is displayed. Connect Thruline Wattmeter, RF Voltmeter, Oscilloscope and 50 ohm load to Exciter (see Figure 5.7.1).

b) Depress 'TGC' key and observe the test equipment to see where the RF output level settles after the automatic setup is completed. The RF output level should be between 32 VRMS/20 Watts and 42 VRMS/35 Watts (see Table 5.7.1).

Repeat this test at 1.6 and 12.0 MHz. The RF output level should be the same as step b) above, between 20 and 35 Watts.

NOTE: During this test 'TGC FAULT' should NOT be displayed.

If 'TGC FAULT' is displayed, verify test equipment setup and connections and Exciter settings. Turn Exciter power OFF and then ON (resetting CPU) and re-accomplish step b).

If 'TGC FAULT' is again displayed after completing above procedure, remove and replace IF/FILTER Assembly 1A2A4, and re-accomplish step b).

c) With equipment still connected as per 5.7.9 a), connect one (1) Audio Generator to J5 pins H and J (USB AUDIO C) and another Audio Generator to J5 pins L and M (LSB AUDIO A). Adjust both Audio Generators to 1.5 kHz, 0 dBm output. Connect J5 pins G and F to remote key switch (see Figure 5.7.1). On Exciter Front Panel go to the 'LINE AUDIO' menu and select 'LSB-A*' and 'USB-C*' keys. Depress 'MIC SEL' until 'MIC-O' is displayed on the Operational Display. Set Exciter to 29.999 MHz, ISB mode and power to 100 Watt level.

d) Depress 'TGC' key and when automatic setup is completed, key the Exciter with remote key switch.

NORMAL: A 100% modulated 165 to 220 Volt peak-to-peak waveform should be displayed on the oscilloscope. Repeat step d) at 1.6 and 12.0 MHz and observe same waveform as above. This completes the Exciter alignment and checks. Return equipment to normal operation.

ABNORMAL: Remove and replace IF/FILTER Assembly 1A2A4 and then re-accomplish step d).

SOFTWARE SWITCH SETTINGS ON CPU PC ASSEMBLY 1A2A1 for T-9400 OPTIONS.

NOTE: S1 Sections 1 through 8 are normally set to OPEN position (all rocker switches are raised at open side, see Figure 5.8.4). If while performing maintenance on the T-9400 the 1A2A1 is replaced, make sure 1A2A1 S1 is configured for non-optionized or for the applicable options installed in the Exciter.

S1 SECTION	SELECTION		OPTION/FUNCTION
	RAISED AT OPEN	RAISED AT NUMBER	
1	OPEN		Normal 1A2A9 TCXO installed.
		1	Optional High Stability 1A2A9 TCXO installed.
2	OPEN		Spare Function / Not used at this time.
3	OPEN		Spare Function / Not used at this time.
4	OPEN		Normal LSB Filter 1A2A4 FL3 installed.
		4	LSB Filter 1A2A4 FL3 plus optional LSB Data Filter 1A2A4 FL4 installed.
5	OPEN		Normal USB Filter 1A2A4 FL4 installed.
		5	USB Filter 1A2A4 FL1 plus optional LSB Data Filter 1A2A4 FL2 installed.
6	OPEN		Normal T-9400 / Stand alone Exciter.
		6	Optional external Post-Selector used with T-9400.
7	OPEN		Not Connected / Not used at this time.
8	OPEN		Not Connected / Not used at this time.

Table 5.7.8.1 Switch Settings for 1A2A1 S1.

5.8 SCHEMATICS AND PARTS LISTS

The following pages contain schematics and parts lists for the T-9400, see Table 5.8 below.

DESIGNATOR		DESCRIPTION	SUNAIR PART NUMBER
ASSEMBLY	SUBASSEMBLY		
1A1		FRONT PANEL ASSEMBLY	81030400XX
	1A1A1	PC ASSEMBLY FRONT PANEL	8076045096
	1A1A2	KEYBOARD, 6X4	8103046809
	1A1A3	CUSTOM LCD, FULL FUNCTION	8076040604
	1A1A4	CUSTOM LCD, 1X40 CHARA	8076041601
	1A1A5	KEYBOARD, 1X5	8076046505
1A2		EXCITER	
	1A2A1	PC ASSEMBLY, CPU	8076070091
	1A2A1A1	OPTO COUPLER	8076075092
	1A2A2	SYNTHESIZER MODULE	8076060095
	1A2A2A1	PC ASSEMBLY, FIRST L.O.	8076068096
	1A2A2A2	PC ASSEMBLY, SECOND L.O.	8076066093
	1A2A2A3	PC ASSEMBLY, BFO	8076062098
	1A2A2A4	PC ASSEMBLY, REF LOOP AND DOUBLER	8076064091
	1A2A2A5	PC ASSEMBLY, MOTHER BOARD (SYN)	8076061091
	1A2A3	PC ASSEMBLY, AUDIO	8103090093
	1A2A4	PC ASSEMBLY, IF/FILTER	8103080098
	1A2A5	PC ASSEMBLY, FRONT END	8076100097
	1A2A6	PC ASSEMBLY, REFERENCE DRIVER	8076120098
	1A2A7	PC ASSEMBLY, MOTHER BOARD	8103017094
	1A2A8	PC ASSEMBLY, I/O BOARD	8076110092
	1A2A8A1	PC ASSEMBLY, FSK MODEM	8076115094
	1A2A9	TCXO, 5 MHz	5024012704
1A3		FILTER ASSEMBLY	8076050090
	1A3A1	PC ASSEMBLY, DETECTOR	8076053099
	1A3A2	PC ASSEMBLY, BANDS 1-4	8076057094
	1A3A3	PC ASSEMBLY, BANDS 5-8	8076055091
1A4		POWER AMPLIFIER ASSEMBLY	8076030099
	1A4A1	PC ASSEMBLY, POWER AMP	8076031095
1A5		POWER SUPPLY MODULE	
	1A5A1	POWER SUPPLY ASSEMBLY, 28 VDC	8103020095
	1A5A1A1	PC ASSEMBLY, SWITCHING REGULATORS	8103022098
	1A5A1A2	PC ASSEMBLY, CONTROL LOGIC	8076024099
	1A5A2	POWER SUPPLY ASSEMBLY, 115/230 VAC	8103021091
	1A5A2A1	PC ASSEMBLY, FILTER AC/PS	8076021197
	1A5A2A2	PC ASSEMBLY, 28 V REGULATOR 17 AMP	8076021391
1A6		REAR PANEL	
	1A6A1	PC ASSEMBLY, REAR PANEL CONNECTOR	8076011094
1A7		CHASSIS ASSEMBLY	81030100XX

Table 5.8 T-9400 Table of Asemblies.

CONNECTOR KIT

	CONNECTOR KIT	8076000491
	ADAPTER, RF, FOR PL-259	0742070000
	CONNECTOR, RF, UHF PL-259	0742190005
	CONNECTOR, RF, BNC UG-88/U	0744030005
	CONNECTOR, POWER, 9 PIN FEMALE	1011120011
	CONNECTOR, POWER, 39 PIN MALE	1011130009
	CONNECTOR, POWER, 19 PIN MALE	1011140004
	JUNCTION SHELL, DB-9	1011130017

FINAL TESTED T-9400

	FINAL TESTED T-9400	81030012XX
1A2A1	PC ASSY, CPU	8076070091
1A2A2	SYNTHESIZER ASSY	8076060095
1A2A3	PC ASSY, AUDIO	8103090093
1A2A4	PC ASSY,IF	8103080098
1A2A5	PC ASSY, FRONT END	8076100097
1A2A6	PC ASSY, REFERENCE DRIVER	8076120098
1A2A8	PC ASSY. I/O BOARD	8076110092
1A5A2	POWER SUPPLY ASSY, 115/230VAC	8103021091
1A7	CHASSIS ASSY	80760100XX
U13	EPROM W/RT-9000 SOFTWARE, #1	8103073296
U20	EPROM, W/IO SOFTWARE RT9000	8076113296
	BUMPER 13/16 OD 13/16 LG	0508140005
	BUMPER 1/4-20 X 1 3/8 DIA.	0508150001
	BUMP-ONS, SELF ADHESIVE	9187040239
	CATCH, HOLD DOWN BLACK	0526370017
	STRIKE, BLACK	0526520001
	COVER, EXCITER	8103011908
	COVER, TOP	80760123XX
	COVER, BOTTOM	80760125XX
	COVER, TOP, DC/PS	8076020905
	COVER, AC POWER SUPPLY	8076021405
	COVER, FILTER MODULE	8076050600
	GASKET KIT, TOP/BOTTOM COVERS	8076012201

CHASSIS ASSEMBLY 1A7

	CHASSIS ASSEMBLY 1A7	81030100XX
1A1	FRONT PANEL ASSY	81030400XX
1A2A7	PC ASSY, MOTHER BOARD	8103017094
1A3	FILTER ASSY	8076050090
1A4	POWER AMPLIFIER ASSY	8076030099
1A5A1	POWER SUPPLY ASSY, 28VDC	8103020095
1A6A1	PC ASSY, REAR PANEL CONNECTOR	8076011094
	BRACKET, CENTER CHANNEL	8076015201
	CABLE, RIBBON, 9 COND, 28 AWG	1011150018
	CHASSIS, CARD CAGE, REC/EXC	8076011507
	CONNECTOR, RF, BNC UG-1094/U	0743740009
	CONNECTOR, RF, UHF	0753300001
	CONNECTOR, HOUSING, 6PIN, FEM	1010840011
	CONNECTOR, RF, RIGHT ANGLE	1010890018
	CONNECTOR, POWER, 2 PIN, MALE	1011070006
	CONNECTOR, POWER, 9 PIN MALE	1011110016
	FUSE, 3AB, 20 AMP, 60VDC	1010690035
	FUSEHOLDER, PANEL MOUNT	0849030005
	JACK SOCKET KIT, D SUB	1011140012
	JUNCTION SHELL, DB-9	1011130017
	REAR PANEL	8076015103
	RH SIDE PLATE	80760102XX
	LH SIDE PLATE	80760103XX
	STANDOFF, F-F, 6-32 .625L	1005880018
1A2A9	TCXO, 5MHZ GROUND EQPT.	5024012704

Figure 5.8.1 Final Tested T-9400, Connector Kit, and Chassis Assembly 1A7.

FRONT PANEL ASSEMBLY 1A1

	FRONT PANEL ASSEMBLY 1A1	81030400XX
1A1A1	PC ASSY, FRONT PANEL	8076045096
1A1A2	KEYBOARD, 6X4	8076046815
1A1A3	CUSTOM LCD, FULL FUNCTION	8076040604
1A1A4	CUSTOM LCD, 1 X 40 CHARA	8076041601
1A1A5	KEYBOARD, 1X5	8076046505
C1	CAP. .01µF, 50V, X7R 20%	0281730008
C2	CAP. .01µF, 50V, X7R 20%	0281730008
C3	CAP. .01µF, 50V, X7R 20%	0281730008
C4	CAP. .01µF, 50V, X7R 20%	0281730008
C5	CAP. .01µF, 50V, X7R 20%	0281730008
C6	CAP. .01µF, 50V, X7R 20%	0281730008
CR1	DIODE, LED, RED	1006710001
J1	CONNECTOR, 1/4 IN JACK, 2 COND	0840850000
J2	CONNECTOR, PHONE JACK, 2 COND.	0754430006
J3	CONNECTOR, AUDIO, 5 PIN	1003300022
J5	CONNECTOR, HEADER, 20 PIN MALE	1011210207
J6	CONNECTOR, HEADER, 14 PIN MALE	1011210142
R3	RESISTOR 680, 10%, 1/4W	0176630007
	MOUNTING BRACKET, KEYBOARD	8076040507
	BRACKET, SPEAKER	8076041309
	CABLE, RIBBON, 40 COND.	1008080012
	CONNECTOR, RIBBON, 10 PIN FEM	1008070017
	CONNECTOR, RIBBON, 40 PIN FEM	1008110035
	JACK COVER, CONNECTOR	0840860005
	PROTECTIVE COVER, LCD MODULE	8076042500
	GASKET KIT, FRONT PANEL	8076042305
	HANDLE	5024043600
	KEY, POLARIZING	1008070033
	MTG RAIL, RH, LCD MODULE	8076042607
	MTG RAIL, LH, LCD MODULE	8076042704
	PANEL, FRONT	80760402XX
	SHAFT ENCODER	1008810029
	SPACER, HANDLE	5024043502
	STANDOFF, F-F, 4-40 X.437LG	1011240009
	STANDOFF, M-F, 4-40 X.312LG	1011250004

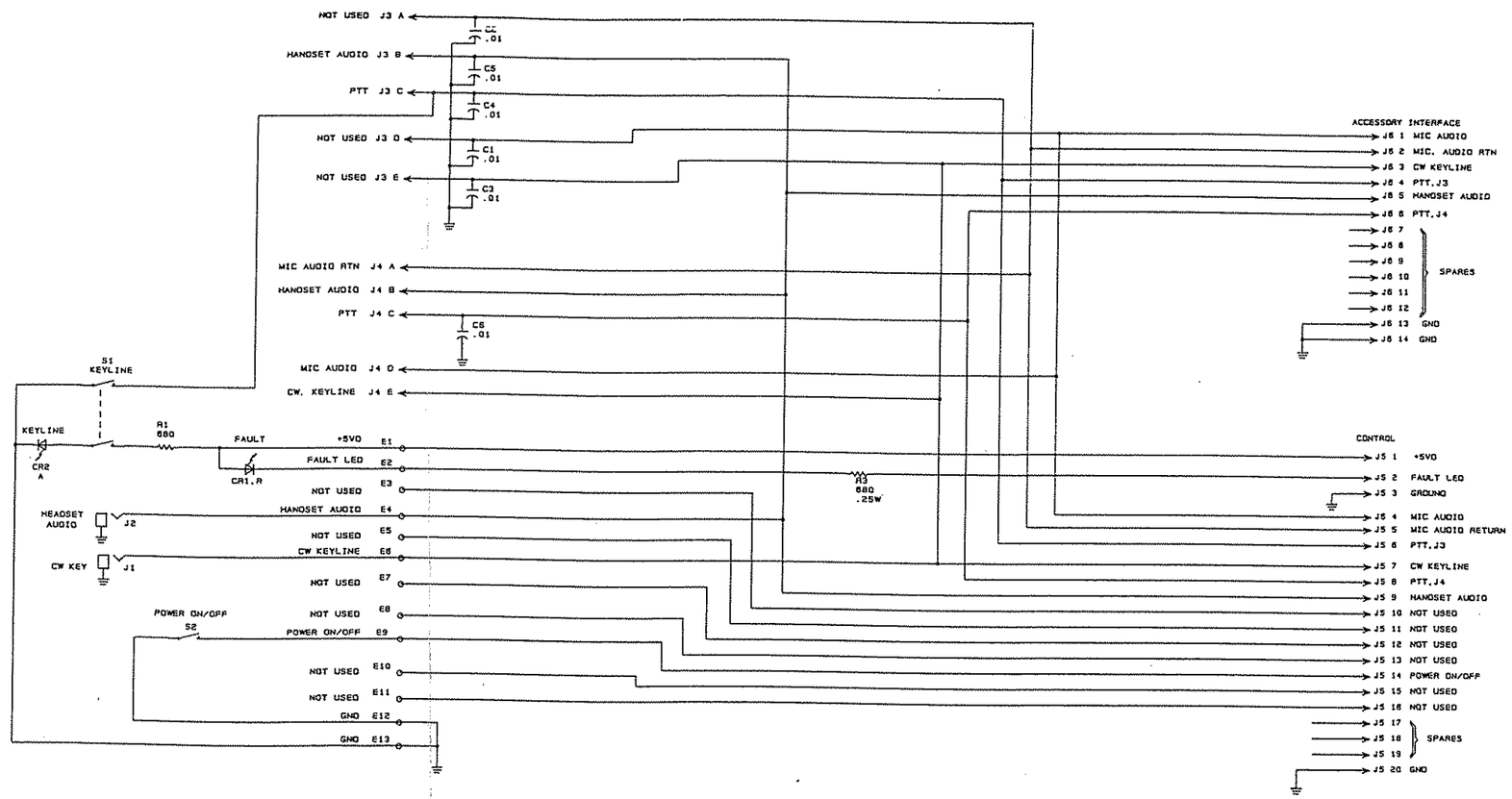

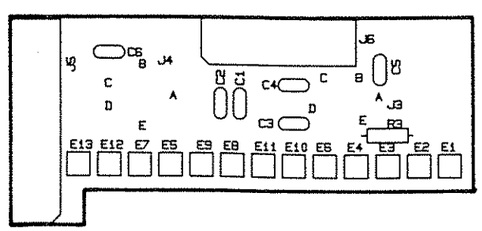

Figure 5.8.2 Front Panel Assembly 1A1, page 1/4.

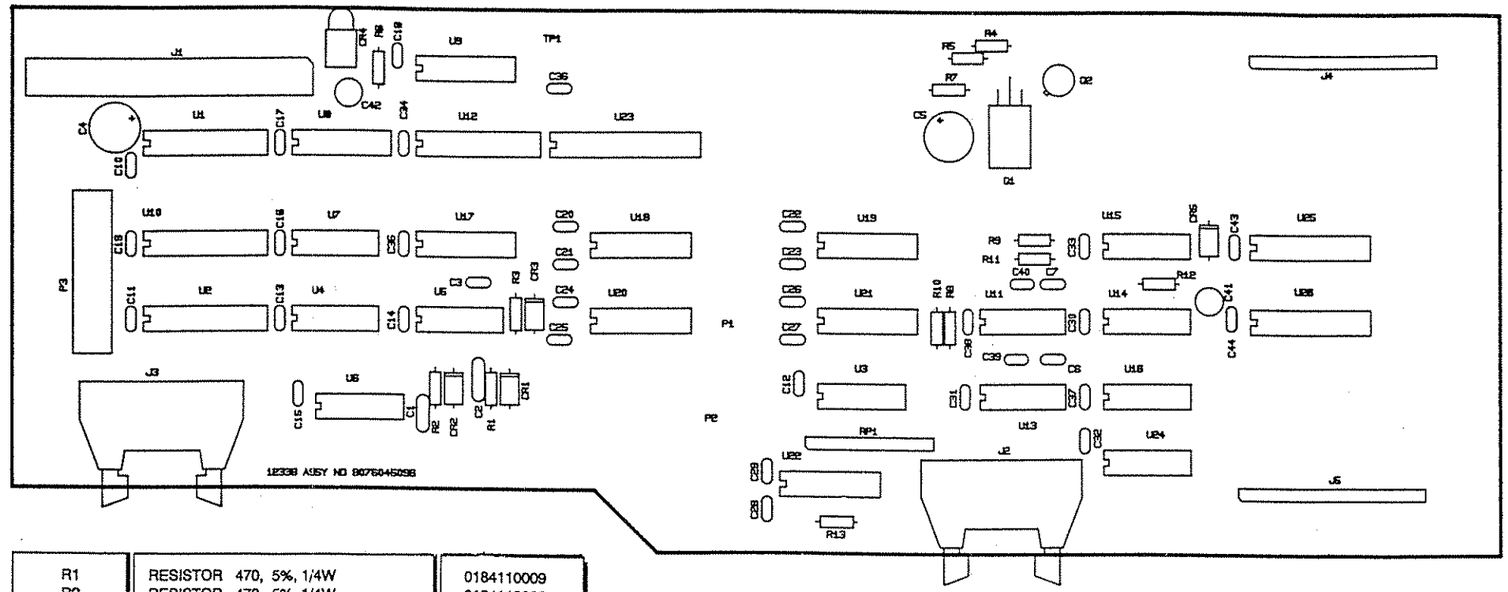

PC ASSY, FRONT PANEL 1A1A1

	PC ASSY, FRONT PANEL 1A1A1	8076045096
C1	CAP. .47µF, 50V, X7R 20%	0283377771
C2	CAP. 0.1µF, 50V, X7R, 20%	0281610002
C3	CAP. 0.047 µF, 50V, X7R, 10%	1010740008
C4	CAP. 100µF 20V 20%	1005120030
C5	CAP. 47µF, 35V	0282190007
C6	CAP. 0.001µF, 100V, X7R, 20%	0281630003
C7	CAP. 0.001µF, 100V, X7R, 20%	0281630003
C10	CAP. .01µF, 50V, X7R 20%	0281730008
C11	CAP. .01µF, 50V, X7R 20%	0281730008
C12	CAP. .01µF, 50V, X7R 20%	0281730008
C13	CAP. .01µF, 50V, X7R 20%	0281730008
C14	CAP. .01µF, 50V, X7R 20%	0281730008
C15	CAP. .01µF, 50V, X7R 20%	0281730008
C16	CAP. .01µF, 50V, X7R 20%	0281730008
C17	CAP. .01µF, 50V, X7R 20%	0281730008
C18	CAP. .01µF, 50V, X7R 20%	0281730008
C19	CAP. .01µF, 50V, X7R 20%	0281730008
C20	CAP. .01µF, 50V, X7R 20%	0281730008
C21	CAP. .01µF, 50V, X7R 20%	0281730008
C22	CAP. .01µF, 50V, X7R 20%	0281730008
C23	CAP. .01µF, 50V, X7R 20%	0281730008
C24	CAP. .01µF, 50V, X7R 20%	0281730008
C25	CAP. .01µF, 50V, X7R 20%	0281730008
C26	CAP. .01µF, 50V, X7R 20%	0281730008
C27	CAP. .01µF, 50V, X7R 20%	0281730008
C28	CAP. .01µF, 50V, X7R 20%	0281730008
C29	CAP. .01µF, 50V, X7R 20%	0281730008
C30	CAP. .01µF, 50V, X7R 20%	0281730008
C31	CAP. .01µF, 50V, X7R 20%	0281730008
C32	CAP. .01µF, 50V, X7R 20%	0281730008
C33	CAP. .01µF, 50V, X7R 20%	0281730008
C34	CAP. .01µF, 50V, X7R 20%	0281730008
C35	CAP. .01µF, 50V, X7R 20%	0281730008
C36	CAP. .01µF, 50V, X7R 20%	0281730008
C37	CAP. .01µF, 50V, X7R 20%	0281730008
C38	CAP. .01µF, 50V, X7R 20%	0281730008
C39	CAP. .01µF, 50V, X7R 20%	0281730008
C40	CAP. .01µF, 50V, X7R 20%	0281730008
C41	CAP. 1µF, 35V, T368	0283630001
C42	CAP. 22µF, 15V, T368	0296660001
C43	CAP. .01µF, 50V, X7R 20%	0281730008
C44	CAP. .01µF, 50V, X7R 20%	0281730008
CR1	DIODE, RECTIFIER 1N4004	0405180004
CR2	DIODE, RECTIFIER 1N4004	0405180004
CR3	DIODE, RECTIFIER 1N4004	0405180004
CR4	DIODE, LED, RED, PC MOUNT	1008480029
CR5	DIODE, RECTIFIER 1N4004	0405180004
J1	CONNECTOR, HEADER, 40PIN	1010740016
J2	CONNECTOR, PC, 10 PIN HEADER	1008070009
J3	CONNECTOR, PC, 10 PIN HEADER	1008070009
J4	SOCKET, BOARDMOUNT, 15 PIN	1011010151
J5	SOCKET, BOARDMOUNT, 15 PIN	1011010151
P1	CONNECTOR, MOLEX 26 PIN	1008720020
P2	CONNECTOR, MOLEX 14 PIN	1008730025
P3	CONNECTOR, RIBBON, 20 PIN FEM	1008120031
Q1	TRANSISTOR, NPN, SI. 2N4922	0445490004
Q2	TRANSISTOR, NPN, SI. 2N2222A	0448580004

R1	RESISTOR 470, 5%, 1/4W	0184110009
R2	RESISTOR 470, 5%, 1/4W	0184110009
R3	RESISTOR 10K, 10%, 1/4W	0170410005
R4	RESISTOR 10K, 10%, 1/4W	0170410005
R5	RESISTOR 2.2K, 5%, 1/4W	0178070009
R6	RESISTOR 220, 10%, 1/4W	0171320000
R7	RESISTOR 47K, 10%, 1/4W	0171060008
R8	RESISTOR 330, 5%, 1/4W	0170910008
R9	RESISTOR 330, 5%, 1/4W	0170910008
R10	RESISTOR 6.8K, 5%, 1/4W	0174810008
R11	RESISTOR 6.8K, 5%, 1/4W	0174810008
R12	RESISTOR 22K, 5%, 1/4W	0172230004
R13	RESISTOR 100K, 10%, 1/4W	0170390004
RP1	RES NTWK 10 PIN SIP 10K COM	1006130021
U1	IC. DIGITAL 74HC374	1006450033
U2	IC. DIGITAL 74HC244	1006460039
U3	IC. DIGITAL 74HC30	1010240021
U4	IC, DIGITAL 74HC74	1008000019
U5	IC. DIGITAL 74HC14	1006490027
U6	IC. DIGITAL 74HC14	1006490027
U7	IC. DIGITAL 74HC10	1008010006
U8	IC. DIGITAL 74HC138	1006480013
U9	IC. DIGITAL 74HC138	1006480013
U10	IC. DIGITAL 74HC373	1006480030
U11	IC, LINEAR LM556	1011170019
U12	IC. DIGITAL 74HC374	1006450033
U13	IC. DIGITAL 74HC08	1006490019
U14	IC. DIGITAL 74HC14	1006490027
U15	IC, DIGITAL 74HC74	1008000019
U16	IC, DIGITAL 74HC74	1008000019
U17	IC. DIGITAL 74HC165	1008710016
U18	IC. DIGITAL CD40109	1008720011
U19	IC. DIGITAL CD40109	1008720011
U20	IC. DIGITAL CD40109	1008720011
U21	IC. DIGITAL CD40109	1008720011
U22	IC. DIGITAL CD40109	1008720011
U23	IC DIGITAL 74HC154	1010160028
U24	IC. DIGITAL 74HC02	1010290029
U25	IC. DIGITAL 74HC244	1006460039
U26	IC. DIGITAL 74HC374	1006450033
	CABLE, FLAT, 20 COND. 28AWG	1008080004
	CONNECTOR,PCB,TRANSITION,20PIN	1011090201
	KEY, POLARIZING	1008070033

Figure 5.8.2 Front Panel Assembly 1A1, page 2/4.

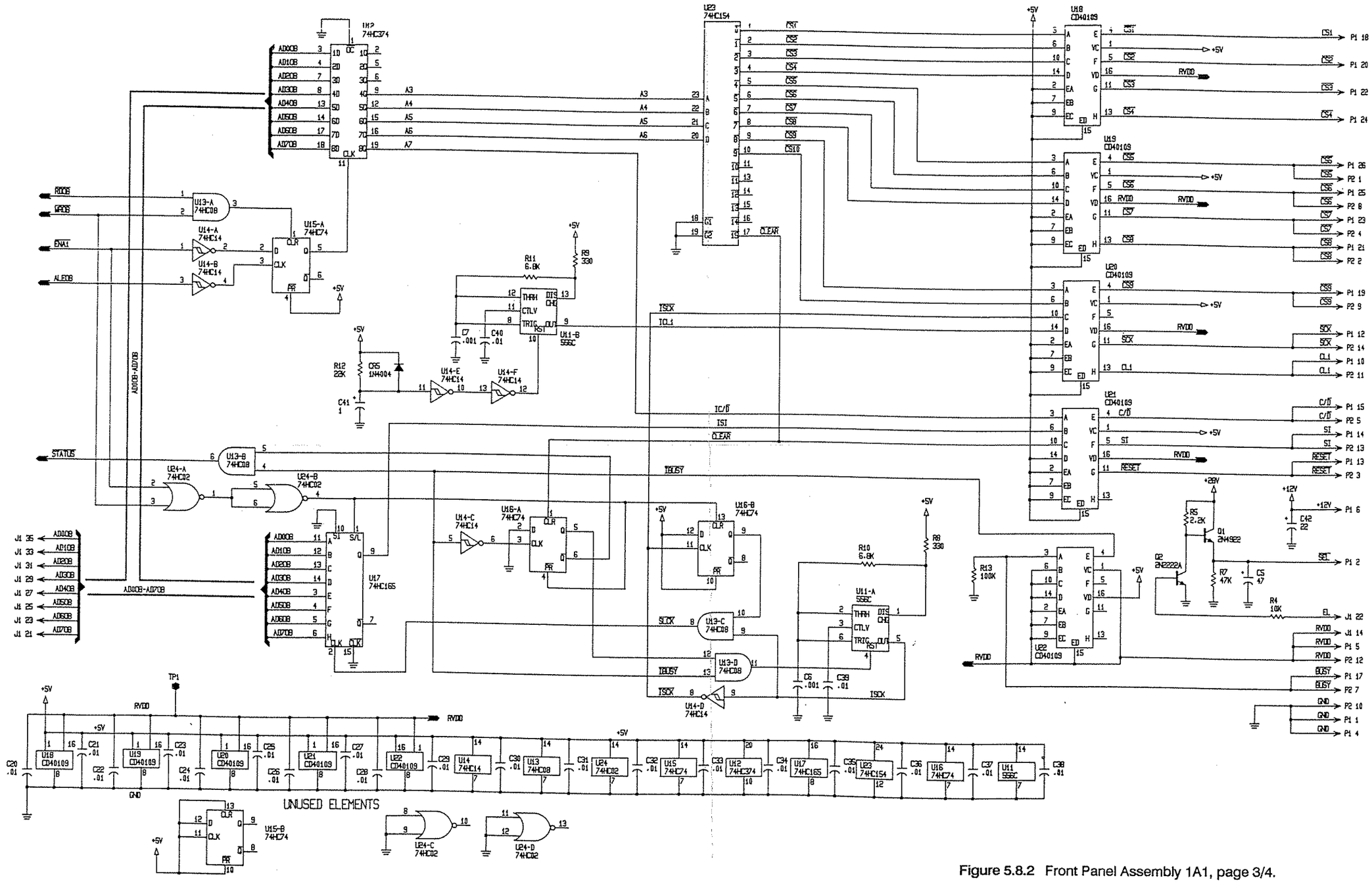

Figure 5.8.2 Front Panel Assembly 1A1, page 3/4.

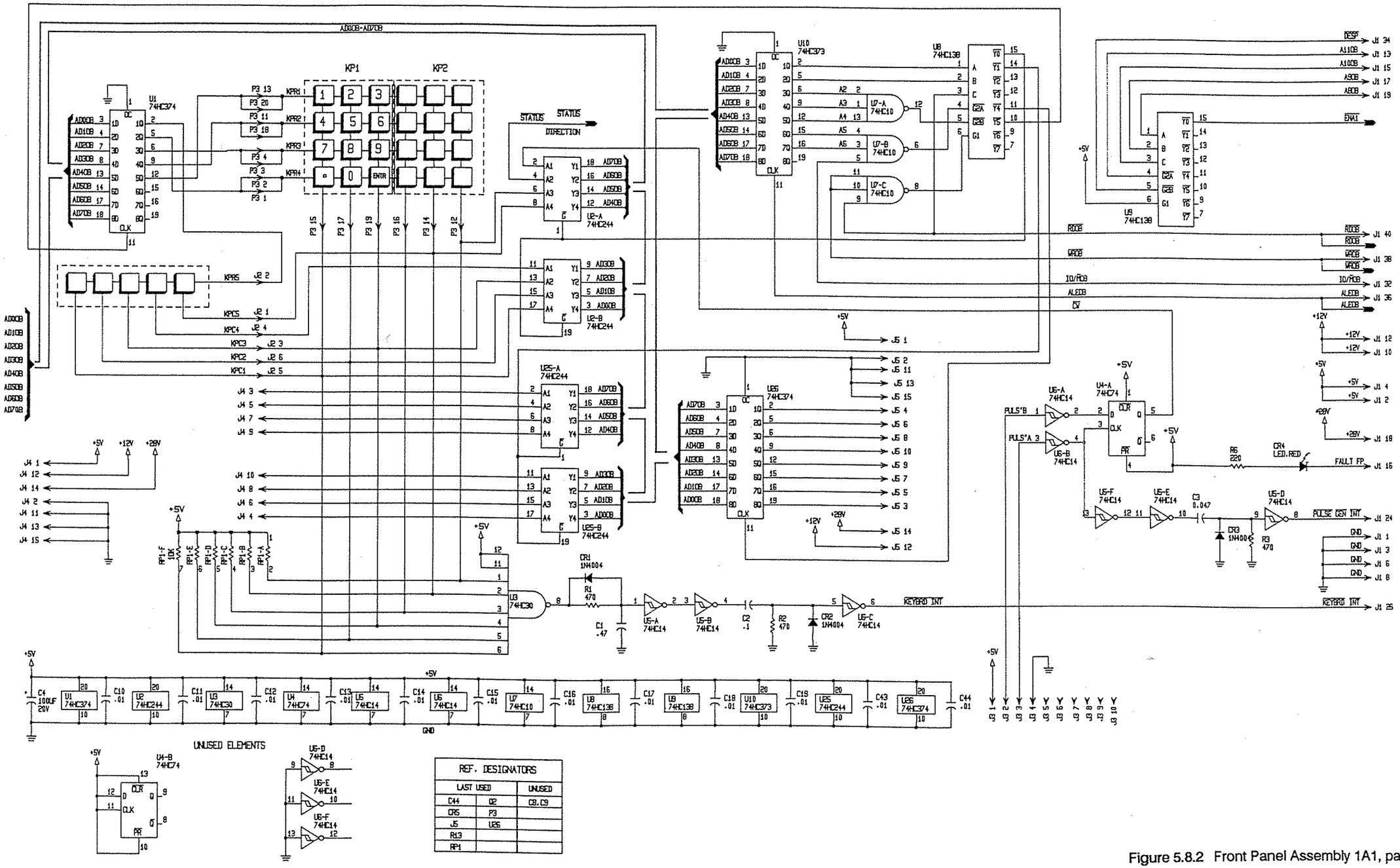

Figure 5.8.2 Front Panel Assembly 1A1, page 4/4.

PC ASSY., MOTHER BOARD 1A2A7

	PC ASSY. , MOTHER BOARD	8103017094
C3	CAP. .01UF, 50V, X7R 20%	0281730008
C4	CAPACITOR 0.1UF, 50V, X7R	1011180014
C5	CAPACITOR 0.1UF, 50V, X7R	1011180014
C6	CAPACITOR 0.1UF, 50V, X7R	1011180014
C7	CAPACITOR 0.1UF, 50V, X7R	1011180014
C8	CAPACITOR 0.1UF, 50V, X7R	1011180014
C9	CAPACITOR 0.1UF, 50V, X7R	1011180014
C10	CAP. .01UF, 50V, X7R 20%	0281730008
C11	CAP. .01UF, 50V, X7R 20%	0281730008
C12	CAP. .01UF, 50V, X7R 20%	0281730008
C13	CAP. .01UF, 50V, X7R 20%	0281730008
C14	CAP. .01UF, 50V, X7R 20%	0281730008
C15	CAPACITOR 0.1UF, 50V, X7R	1011180014
C16	CAPACITOR 0.1UF, 50V, X7R	1011180014
C17	CAP. 47UF, 20V, 196D	0281700001
C18	CAP. .01UF, 50V, X7R 20%	0281730008
C19	CAP. .01UF, 50V, X7R 20%	0281730008
C20	CAP. .01UF, 50V, X7R 20%	0281730008
C21	CAP. .01UF, 50V, X7R 20%	0281730008
C23	CAP. .01UF, 50V, X7R 20%	0281730008
C24	CAP. .01UF, 50V, X7R 20%	0281730008
C26	CAP. .47UF, 50V, X7R 20%	0283377771
C27	CAP. .01UF, 50V, X7R 20%	0281730008
C28	CAP. .01UF, 50V, X7R 20%	0281730008
C29	CAP. .01UF, 50V, X7R 20%	0281730008
C30	CAP. .01UF, 50V, X7R 20%	0281730008
C31	CAP. .01UF, 50V, X7R 20%	0281730008
C32	CAP. .01UF, 50V, X7R 20%	0281730008
C33	CAP. .01UF, 50V, X7R 20%	0281730008
C34	CAP. .01UF, 50V, X7R 20%	0281730008
C35	CAP. .01UF, 50V, X7R 20%	0281730008
C36	CAP. .47UF, 50V, X7R 20%	0283377771
C37	CAP. 15UF, 15V, 196D	0281720002
C38	CAP. 15UF, 15V, 196D	0281720002
C39	CAP. 15UF, 15V, 196D	0281720002
C40	CAP. .01UF, 50V, X7R 20%	0281730008
C41	CAP. 15UF, 15V, 196D	0281720002
C42	CAP. .01UF, 50V, X7R 20%	0281730008
C43	CAP. .01UF, 50V, X7R 20%	0281730008
C44	CAP. .01UF, 50V, X7R 20%	0281730008
C45	CAP. .01UF, 50V, X7R 20%	0281730008
C46	CAP. .01UF, 50V, X7R 20%	0281730008
C47	CAP. .01UF, 50V, X7R 20%	0281730008
C48	CAP. .01UF, 50V, X7R 20%	0281730008
C49	CAP. .01UF, 50V, X7R 20%	0281730008
C50	CAP. .01UF, 50V, X7R 20%	0281730008
C51	CAP. .01UF, 50V, X7R 20%	0281730008
C52	CAP. .01UF, 50V, X7R 20%	0281730008
C53	CAPACITOR 0.1UF, 50V, X7R	1011180014
C54	CAPACITOR 0.1UF, 50V, X7R	1011180014
J1	CONNECTOR, PC. 40 PIN DUAL	1010920006
J2	CONNECTOR, PC. 40 PIN DUAL	1010920006
J3	CONNECTOR, PC, 22PIN DUAL,FEM	1008830003
J4	CONNECTOR, PC, 22PIN DUAL,FEM	1008830003
J5	CONNECTOR, PC, 22PIN DUAL,FEM	1008830003
J6	CONNECTOR, PC, 22PIN DUAL,FEM	1008830003

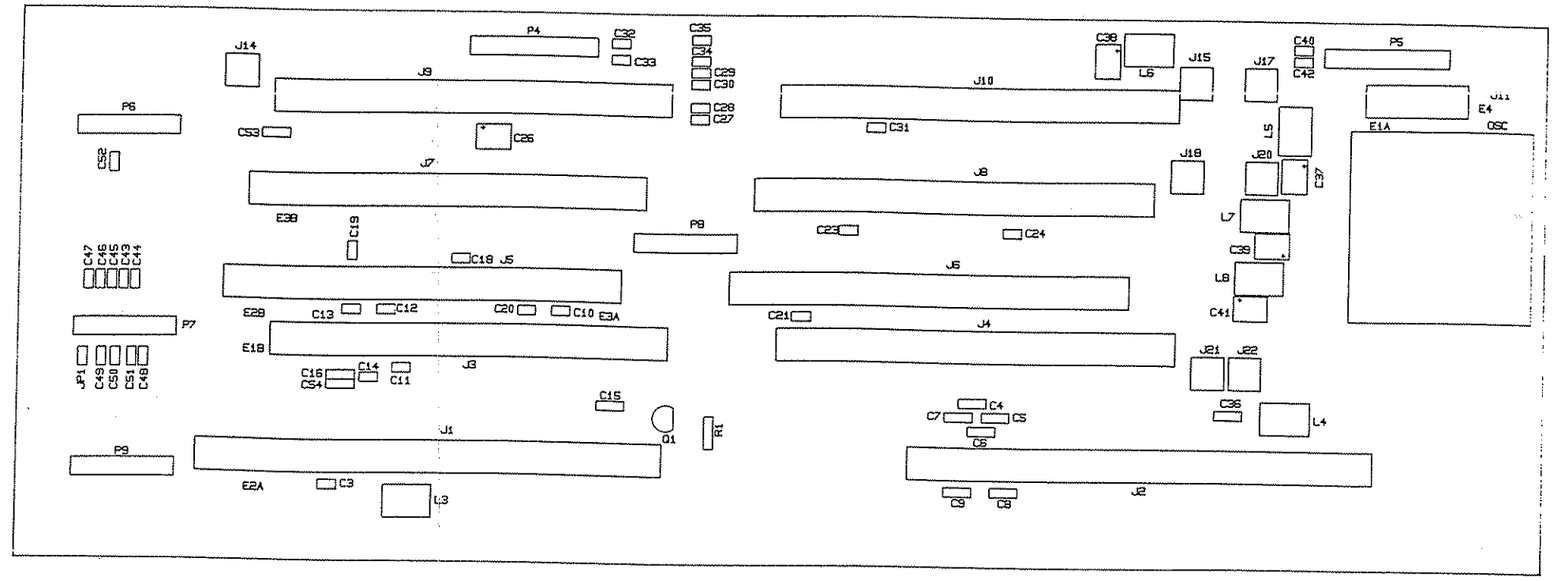

J7	CONNECTOR, PC, 22PIN DUAL,FEM	1008830003
J8	CONNECTOR, PC, 22PIN DUAL,FEM	1008830003
J9	CONNECTOR, PC, 22PIN DUAL,FEM	1008830003
J10	CONNECTOR, PC, 22PIN DUAL,FEM	1008830003
J11	CONNECTOR, PC, 6 PIN DUAL, FEM	1011160005
J14	CONNECTOR, RF, JACK	1010810006
J15	CONNECTOR, RF, JACK	1010810006
J17	CONNECTOR, RF, JACK	1010810006
J18	CONNECTOR, RF, JACK	1010810006
J20	CONNECTOR, RF, JACK	1010810006
J21	CONNECTOR, RF, JACK	1010810006
J22	CONNECTOR, RF, JACK	1010810006
L1	INDUCTOR, MOLDED, 47UH, 5%	0646420003
L3	CHOKE, POWER	8076104700
L4	CHOKE, POWER	8076104700
L5	CHOKE, POWER	8076104700
L6	CHOKE, POWER	8076104700
L7	CHOKE, POWER	8076104700
L8	CHOKE, POWER	8076104700
P4	CONNECTOR, RIBBON, 26 PIN FEM	1008340031
P5	CONNECTOR, RIBBON, 26 PIN FEM	1008340031

P6	CONNECTOR, RIBBON, 20 PIN FEM	1008120031
P7	CONNECTOR, RIBBON, 20 PIN FEM	1008120031
P8	CONNECTOR, RIBBON, 20 PIN FEM	1008120031
P9	CONNECTOR, RIBBON, 20 PIN FEM	1008120031
Q1	TRANSISTOR, N-CH, FET 2N7000	1011050013
R1	RESISTOR 10K, 5%, 1/8W	1010801031
XP4	CONNECTOR,PCB,TRANSITION,26PIN	1011090261
XP5	CONNECTOR,PCB,TRANSITION,26PIN	1011090261
XP6	CONNECTOR,PCB,TRANSITION,20PIN	1011090201
XP7	CONNECTOR,PCB,TRANSITION,20PIN	1011090201
XP8	CONNECTOR,PCB,TRANSITION,20PIN	1011090201
XP9	CONNECTOR,PCB,TRANSITION,20PIN	1011090201
	CABLE, FLAT, 20 COND. 28AWG	1008080004
	CABLE, FLAT, 26 COND. 28AWG	1011180006
	CONNECTOR, RF, SUBMINIATURE	0753700000
	JACK, PCB, SOLDER MOUNT	1008920002

Figure 5.8.3 PC Assembly, Mother Board 1A2A7, page 1/4.

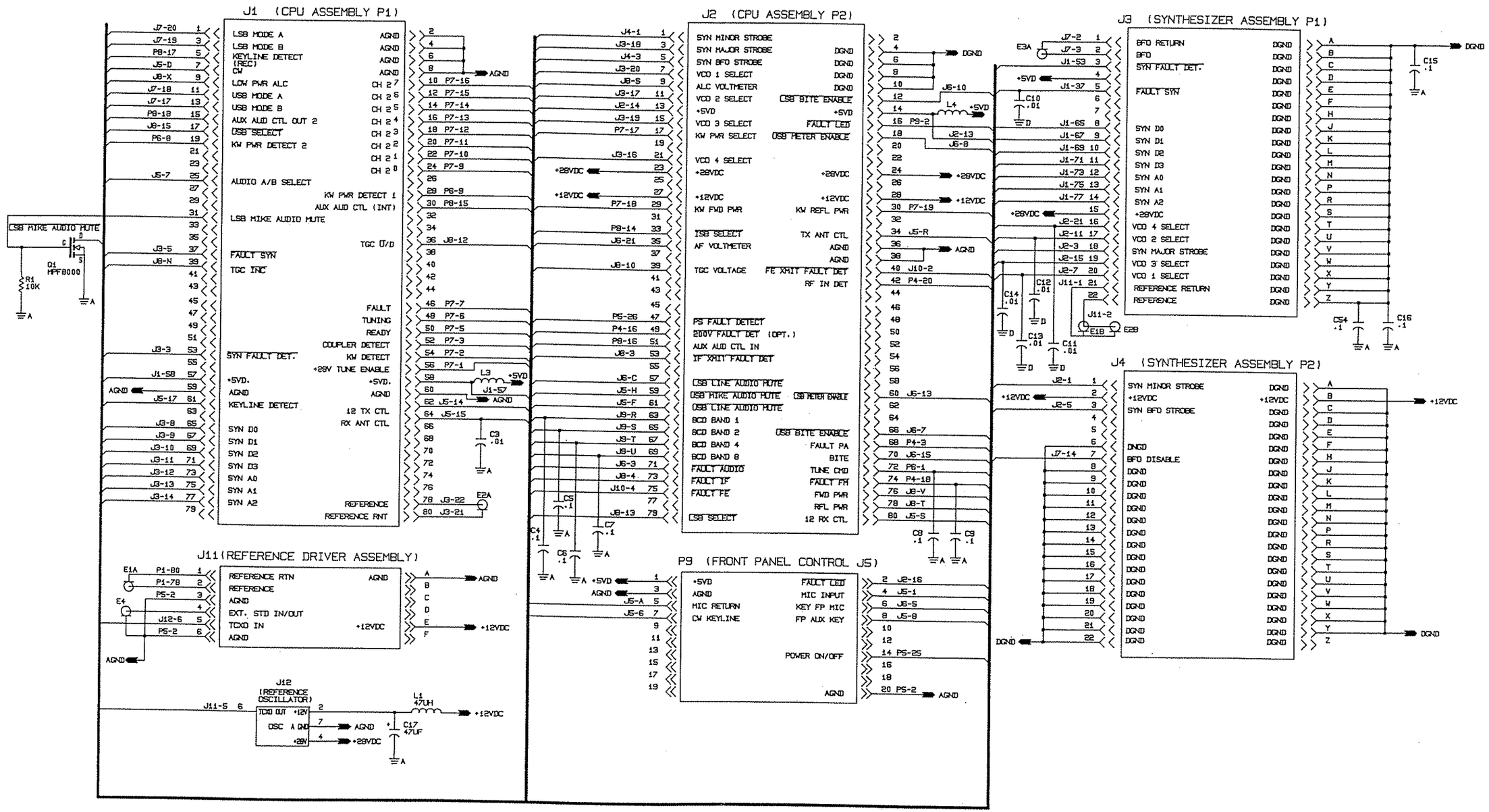

NOTE: REFER TO 'RF INTERCONNECT DIAGRAM' FOR TRANSCEIVER RF SIGNAL INTERCONNECT IONS.

Figure 5.8.3 PC Assembly, Mother Board 1A2A7, page 2/4.

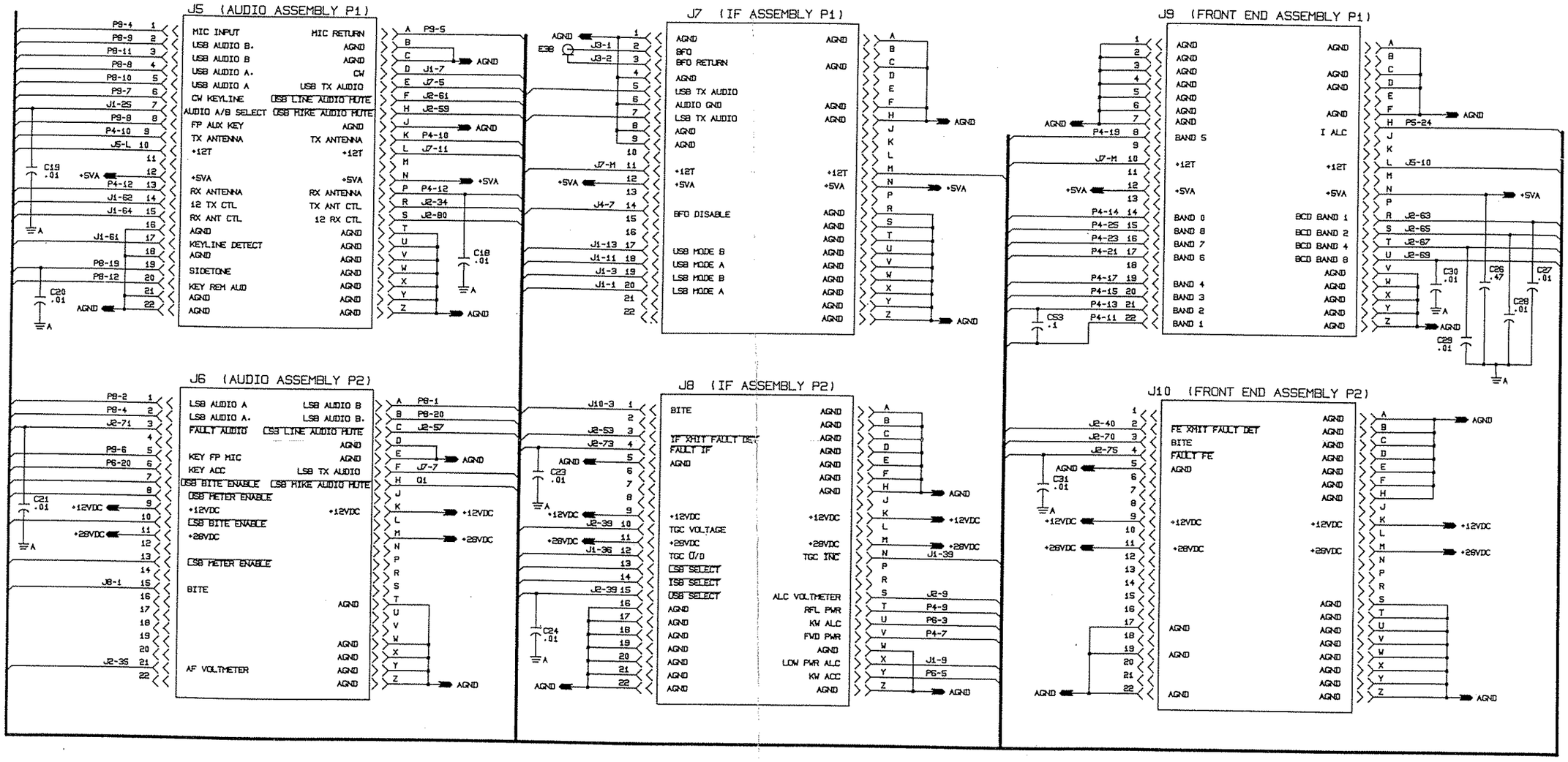

Figure 5.8.3 PC Assembly, Mother Board 1A2A7, page 3/4.

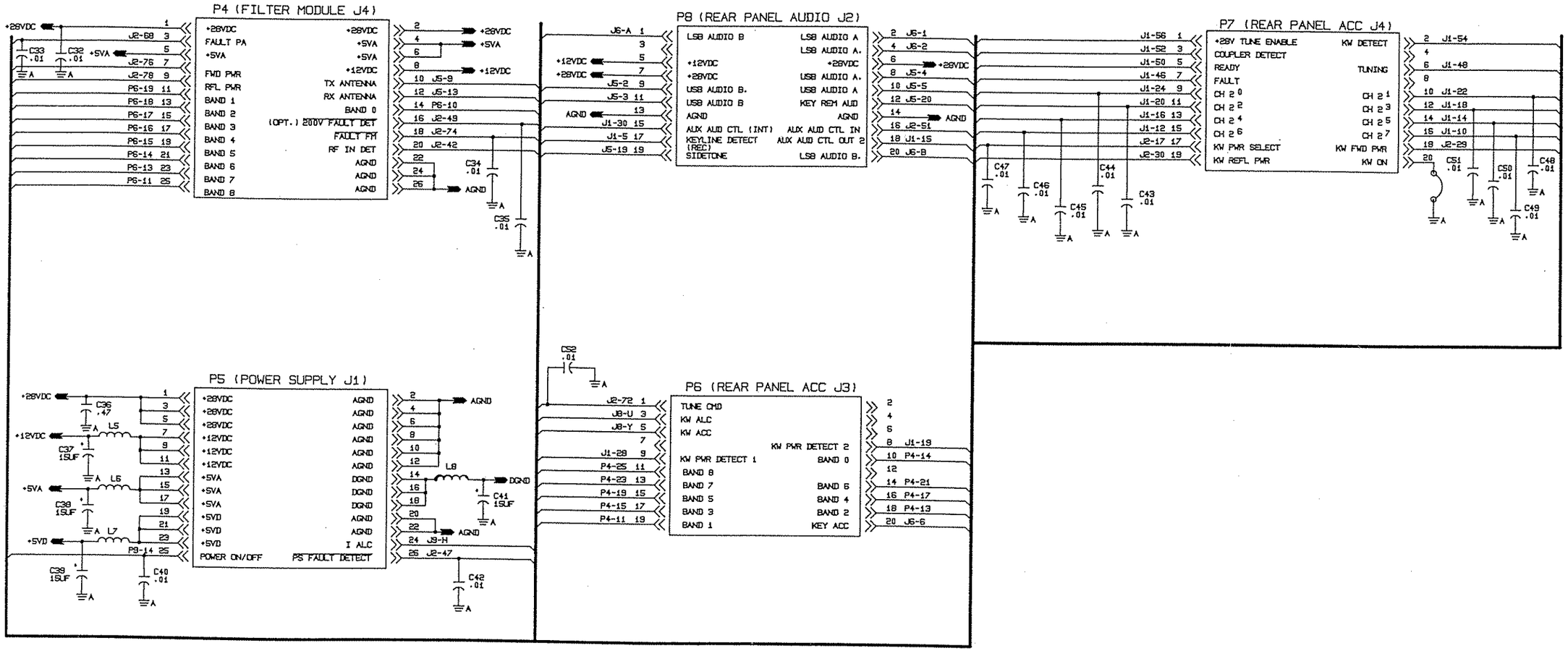

Figure 5.8.3 PC Assembly, Mother Board 1A2A7, page 4/4.

PC ASSY, CPU 1A2A1

	PC ASSY, CPU 1A2A1	8076070091
C3	CAP. .01µF, 50V, X7R 20%	0281730008
C5	CAP. 47µF, 20V, 196D	0281700001
C8	CAP. 6.8µF, 20V, T368	0296780006
C9	CAP. .01µF, 50V, X7R 20%	0281730008
C11	CAP. 0.001µF, 100V, X7R, 20%	0281630003
C12	CAP. 68µF, 15V,	0296547778
C13	CAP. .01µF, 50V, X7R 20%	0281730008
C14	CAP. .01µF, 50V, X7R 20%	0281730008
C15	CAP. .01µF, 50V, X7R 20%	0281730008
C16	CAP. .01µF, 50V, X7R 20%	0281730008
C17	CAP. .01µF, 50V, X7R 20%	0281730008
C18	CAP. .01µF, 50V, X7R 20%	0281730008
C19	CAP. .01µF, 50V, X7R 20%	0281730008
C20	CAP. .01µF, 50V, X7R 20%	0281730008
C21	CAP. .01µF, 50V, X7R 20%	0281730008
C22	CAP. .01µF, 50V, X7R 20%	0281730008
C23	CAP. .01µF, 50V, X7R 20%	0281730008
C24	CAP. .01µF, 50V, X7R 20%	0281730008
C25	CAP. .01µF, 50V, X7R 20%	0281730008
C26	CAP. .01µF, 50V, X7R 20%	0281730008
C27	CAP. 10µF, 20V	1007290005
C28	CAP. .01µF, 50V, X7R 20%	0281730008
C29	CAP. 10µF, 20V	1007290005
C31	CAP. .01µF, 50V, X7R 20%	0281730008
C32	CAP. .01µF, 50V, X7R 20%	0281730008
C33	CAP. .01µF, 50V, X7R 20%	0281730008
C34	CAP. .01µF, 50V, X7R 20%	0281730008
C35	CAP. .01µF, 50V, X7R 20%	0281730008
C36	CAP. .01µF, 50V, X7R 20%	0281730008
C39	CAP. .01µF, 50V, X7R 20%	0281730008
C40	CAP. .01µF, 50V, X7R 20%	0281730008
C41	CAP. .01µF, 50V, X7R 20%	0281730008
C42	CAP. .01µF, 50V, X7R 20%	0281730008
C43	CAP. .01µF, 50V, X7R 20%	0281730008
C44	CAP. .01µF, 50V, X7R 20%	0281730008
C45	CAP. .01µF, 50V, X7R 20%	0281730008
C47	CAP. .01µF, 50V, X7R 20%	0281730008
C48	CAP. .01µF, 50V, X7R 20%	0281730008
C49	CAP. .01µF, 50V, X7R 20%	0281730008
C50	CAP. .01µF, 50V, X7R 20%	0281730008
C51	CAP. .01µF, 50V, X7R 20%	0281730008
C52	CAP. .01µF, 50V, X7R 20%	0281730008
C54	CAP. .01µF, 50V, X7R 20%	0281730008
C55	CAP. .01µF, 50V, X7R 20%	0281730008
C56	CAP. .01µF, 50V, X7R 20%	0281730008
C57	CAP. .01µF, 50V, X7R 20%	0281730008
C60	CAP. .01µF, 50V, X7R 20%	0281730008
C62	CAP. .01µF, 50V, X7R 20%	0281730008
C68	CAP. .01µF, 50V, X7R 20%	0281730008
C69	CAP. .01µF, 50V, X7R 20%	0281730008
C92	CAP. .01µF, 50V, X7R 20%	0281730008
C93	CAP. .01µF, 50V, X7R 20%	0281730008
C94	CAP. .01µF, 50V, X7R 20%	0281730008
C95	CAP. .01µF, 50V, X7R 20%	0281730008
C96	CAP. .01µF, 50V, X7R 20%	0281730008
C98	CAP. .01µF, 50V, X7R 20%	0281730008
C99	CAP. .01µF, 50V, X7R 20%	0281730008
C100	CAP. .01µF, 50V, X7R 20%	0281730008
C101	CAP. .01µF, 50V, X7R 20%	0281730008
C102	CAP. .01µF, 50V, X7R 20%	0281730008
C103	CAP. .01µF, 50V, X7R 20%	0281730008
C104	CAP. .01µF, 50V, X7R 20%	0281730008
C105	CAP. .01µF, 50V, X7R 20%	0281730008
C106	CAP. .01µF, 50V, X7R 20%	0281730008
C107	CAP. .01µF, 50V, X7R 20%	0281730008
C108	CAP. .01µF, 50V, X7R 20%	0281730008
C109	CAP. .01µF, 50V, X7R 20%	0281730008
C111	CAP. .01µF, 50V, X7R 20%	0281730008
C112	CAP. .01µF, 50V, X7R 20%	0281730008
C113	CAP. .01µF, 50V, X7R 20%	0281730008
C114	CAP. .01µF, 50V, X7R 20%	0281730008
C123	CAP. .01µF, 50V, X7R 20%	0281730008
C124	CAP. .01µF, 50V, X7R 20%	0281730008
C125	CAP. .01µF, 50V, X7R 20%	0281730008
C131	CAP. .01µF, 50V, X7R 20%	0281730008
C132	CAP. .01µF, 50V, X7R 20%	0281730008
C133	CAP. .01µF, 50V, X7R 20%	0281730008
C134	CAP. .01µF, 50V, X7R 20%	0281730008
C135	CAP. .01µF, 50V, X7R 20%	0281730008
C136	CAP. .01µF, 50V, X7R 20%	0281730008
C137	CAP. .01µF, 50V, X7R 20%	0281730008
C138	CAP. .01µF, 50V, X7R 20%	0281730008
C139	CAP. .01µF, 50V, X7R 20%	0281730008
C140	CAP. .01µF, 50V, X7R 20%	0281730008
C141	CAP. .01µF, 50V, X7R 20%	0281730008
C142	CAP. .01µF, 50V, X7R 20%	0281730008
C143	CAP. .01µF, 50V, X7R 20%	0281730008
C144	CAP. .01µF, 50V, X7R 20%	0281730008
C145	CAP. .01µF, 50V, X7R 20%	0281730008
C146	CAP. 3.3µF, 35V, 196D	0281680001
CR1	DIODE, SIGNAL, GERM. 1N270	0405510004
CR2	DIODE, SIGNAL, SIL. 1N4454	0405270003
CR5	DIODE, RECTIFIER 1N4004	0405180004
CR7	DIODE, LED, RED, PC MOUNT	1008480029
CR9	DIODE, TRANSIENT SUPR.TVS505	1010720007
CR10	DIODE, ZENER 1N5227B	0405250002
CR11	DIODE, SIGNAL, SIL. 1N4454	0405270003
FB1	BEAD, FERRITE .200OD,.437LG	1010910019
FB2	FERRITE BEAD, 5000 PERM	1010980017
J1	SOCKET, BOARDMOUNT, 11 PIN	1011010119
J2	SOCKET, BOARDMOUNT, 11 PIN	1011010119
J3	SOCKET, BOARDMOUNT, 11 PIN	1011010119
J4	SOCKET, BOARDMOUNT, 11 PIN	1011010119
J5	SOCKET, BOARDMOUNT, 11 PIN	1011010119
J6	SOCKET, BOARDMOUNT, 11 PIN	1011010119
J7	SOCKET, BOARDMOUNT, 11 PIN	1011010119
L1	INDUCTOR, MOLDED, 33µH, 5%	0659690004
L2	INDUCTOR, MOLDED, 33µH, 5%	0659690004
L3	INDUCTOR, MOLDED, 33µH, 5%	0659690004
L4	INDUCTOR, MOLDED, 33µH, 5%	0659690004
L5	INDUCTOR, MOLDED, 33µH, 5%	0659690004
L6	INDUCTOR, MOLDED, 33µH, 5%	0659690004
L7	INDUCTOR, MOLDED, 33µH, 5%	0659690004
L8	INDUCTOR, MOLDED, 33µH, 5%	0646300008
L9	INDUCTOR, MOLDED, 33µH, 5%	0646300008
L12	INDUCTOR, MOLDED, 33µH, 5%	0659690004
L13	INDUCTOR, MOLDED, 33µH, 5%	0659690004
L15	INDUCTOR, MOLDED, 33µH, 5%	0659690004
L16	INDUCTOR, MOLDED, 33µH, 5%	0659690004
L17	INDUCTOR, MOLDED, 33µH, 5%	0659690004
L18	INDUCTOR, MOLDED, 33µH, 5%	0646300008
P3	CONNECTOR,HEADER 40 PIN	1010780000
Q1	TRANSISTOR, NPN, SI. 2N4124	0448010003
Q2	TRANSISTOR, NPN, SI. 2N4124	0448010003
R3	RESISTOR 1K, 10%, 1/4W	0171560001
R5	RESISTOR 470, 5%, 1/4W	0184110009
R6	RESISTOR 10K, 10%, 1/4W	0170410005
R12	RESISTOR 10K, 10%, 1/4W	0170410005
R13	RESISTOR 10K, 10%, 1/4W	0170410005
R14	RESISTOR 10, 5%, 1/4W	0177160004
R15	RESISTOR 1M, 10%, 1/4W	0170650006
R16	RESISTOR 3.9K, 10%, 1/4W	0178830003
R18	RESISTOR 220, 10%, 1/4W	0171320000
R21	RESISTOR 4.7K, 5%, 1/4W	0170770001
R22	RESISTOR 5.11K, 1%, 1/8W	1003120016
R23	RESISTOR 28K 1%, 1/8W	1004050038
R40	RESISTOR 1.91K 1%, 1/8W	1008530018
R41	RESISTOR 6.81K, 1%, 1/8W	0196350000
R42	RESISTOR 1.91K 1%, 1/8W	1008530018
R43	RESISTOR 6.81K, 1%, 1/8W	0196350000
R46	RESISTOR 10K, 1%, 1/8W	1003050026
R47	RESISTOR 10K, 1%, 1/8W	1003050026
R54	RESISTOR 10K, 10%, 1/4W	0170410005
R55	RESISTOR 470, 5%, 1/4W	0184110009
R56	RESISTOR 15, 10%, 1/4W	0181740001
R79	RESISTOR 10K, 10%, 1/4W	0170410005
R80	RESISTOR 10K, 10%, 1/4W	0170410005
R81	RESISTOR 22K, 5%, 1/4W	0172230004
R88	RESISTOR 5.11K, 1%, 1/8W	1003120016
R89	RESISTOR 5.11K, 1%, 1/8W	1003120016
R90	RESISTOR 2.2K, 5%, 1/4W	0178070009
R91	RESISTOR 2.2K, 5%, 1/4W	0178070009
R92	RESISTOR 2.2K, 5%, 1/4W	0178070009
R93	RESISTOR 2.2K, 5%, 1/4W	0178070009
R94	RESISTOR 2.2K, 5%, 1/4W	0178070009
R95	RESISTOR 2.2K, 5%, 1/4W	0178070009
R96	RESISTOR 2.2K, 5%, 1/4W	0178070009
R97	RESISTOR 10K, 10%, 1/4W	0170410005
R98	RESISTOR 680, 10%, 1/4W	0176630007
R99	RESISTOR 10K, 10%, 1/4W	0170410005
R100	RESISTOR 1.91K 1%, 1/8W	1008530018
R101	RESISTOR 6.81K, 1%, 1/8W	0196350000
R102	RESISTOR 7.87K 1%, 1/8W	1004090021
R103	RESISTOR 6.81K, 1%, 1/8W	0196350000
R104	RESISTOR 1K, 10%, 1/4W	0171560001
R105	RESISTOR 22K, 5%, 1/4W	0172230004
RP1	RES NTWK 10 PIN SIP 10K COM	1006130021
RP2	RES NTWK 10 PIN SIP 10K COM	1006130021
RP3	RES NTWK 10 PIN SIP 10K COM	1006130021
RP4	RES NTWK 10 PIN SIP 10K COM	1006130021
RP5	RES NTWK 10 PIN SIP 10K COM	1006130021
RP7	RES NTWK 10 PIN SIP 10K COM	1006130021
RP8	RES NTWK 10 PIN SIP 10K COM	1006130021
RP9	RES NTWK 10 PIN SIP 22K COM	1006570012
RP13	RES NTWK 10 PIN SIP 10K COM	1006130021
RP18	RES NTWK 10 PIN SIP 10K COM	1006130021
RP19	RES NTWK 10 PIN SIP 10K COM	1006130021
S1	SWITCH, SPST, ROCKER DIP	1010210025
S2	SWITCH, PUSHBUTTON,SPST	1010710001
U2	IC. DIGITAL 80C85A	1007400013
U3	I.C. DIGITAL RAM 6264	1010650009
U4	IC. DIGITAL 74HC244	1006460039
U5	IC. DIGITAL 74HC245	1006470034
U6	IC. DIGITAL 74HC244	1006460039
U7	IC. DIGITAL 74HC373	1006480030
U8	IC. DIGITAL 28C64	1010660004
U9	IC. DIGITAL 74HC139	1006770038
U10	IC. DIGITAL 74HC244	1006460039
U11	IC. DIGITAL 74HC244	1006460039
U12	IC. DIGITAL 74HC374	1006450033
U13	EPROM W/T-9400 SOFTWARE, #1	8103073296
U14	EPROM W/T-9400 SOFTWARE, #2	8103072290
U15	IC, DIGITAL 74HC00	1008190004
U16	IC. DIGITAL 74HC08	1006490019
U17	IC. DIGITAL ADC0804	1010670000
U18	IC. DIGITAL 74HC374	1006450033
U19	IC. LINEAR LM358	1010680005
U22	IC. DIGITAL 74HC245	1006470034
U23	IC. DIGITAL 74HC244	1006460039
U24	IC. DIGITAL 4067B	1006800034
U25	IC. DIGITAL 74HC244	1006460039
U28	IC DIGITAL 74HC154	1010160028
U29	IC DIGITAL 74HC154	1010160028
U30	IC. DIGITAL 74HC138	1006480013
U32	IC. DIGITAL 74HC374	1006450033
U33	IC. DIGITAL 74HC374	1006450033
U34	IC. DIGITAL 7417	1003870007
U35	IC. DIGITAL 74HC374	1006450033
U36	IC. DIGITAL 74HC374	1006450033
U39	IC. DIGITAL 74HC374	1006450033
U41	IC. DIGITAL 74HC374	1006450033
U42	IC. DIGITAL 74HC374	1006450033
U45	IC. DIGITAL 74HC14	1006490027
U46	IC. DIGITAL 74HC244	1006460039
U47	IC. DIGITAL 74HC14	1006490027
U48	IC. LINEAR 556C/3456	1005620032
U49	IC. DIGITAL 74HC14	1006490027
U50	IC, DIGITAL 8259A	1006800018
U51	IC. DIGITAL 74HC244	1006460039
U53	IC. DIGITAL 74HC244	1006460039
U54	IC. DIGITAL 74HC374	1006450033
U55	IC. DIGITAL 74HC244	1006460039
U56	IC. DIGITAL 74HC08	1006490019
U58	IC. DIGITAL 74HC14	1006490027
U59	IC. DIGITAL 74HC374	1006450033
U60	IC. DIGITAL 74HC192	1010690001
U61	IC, DIGITAL 74HC74	1008000019
U67	IC. DIGITAL 74HC139	1006770038
U75	IC. DIGITAL MM5369EST	1010700006
U77	IC. DIGITAL 2501-4	1010630008
U100	IC. DIGITAL 2501-4	1010630008
U107	IC. DIGITAL 74HC244	1006460039
XU2	SOCKET, IC, 40 PIN TAILLESS	1006620010
XU3	SOCKET, IC, 28 PIN TAILLESS	1006620001
XU8	SOCKET, IC, 28 PIN TAILLESS	1006620001
XU13	SOCKET, IC, 28 PIN TAILLESS	1006620001
XU14	SOCKET, IC, 28 PIN TAILLESS	1006620001
	MOUNTING PLATE, CPU	8076070805

Figure 5.8.4 PC Assembly, CPU 1A2A1, page 1/6.

NOTE: NORMAL SETTINGS FOR S1: SEGMENTS 1 THROUGH 8, ALL SEGMENTS DEPRESSED TO NUMBERED END. SEE TABLE 5.7.8.1 FOR OPTIONS.

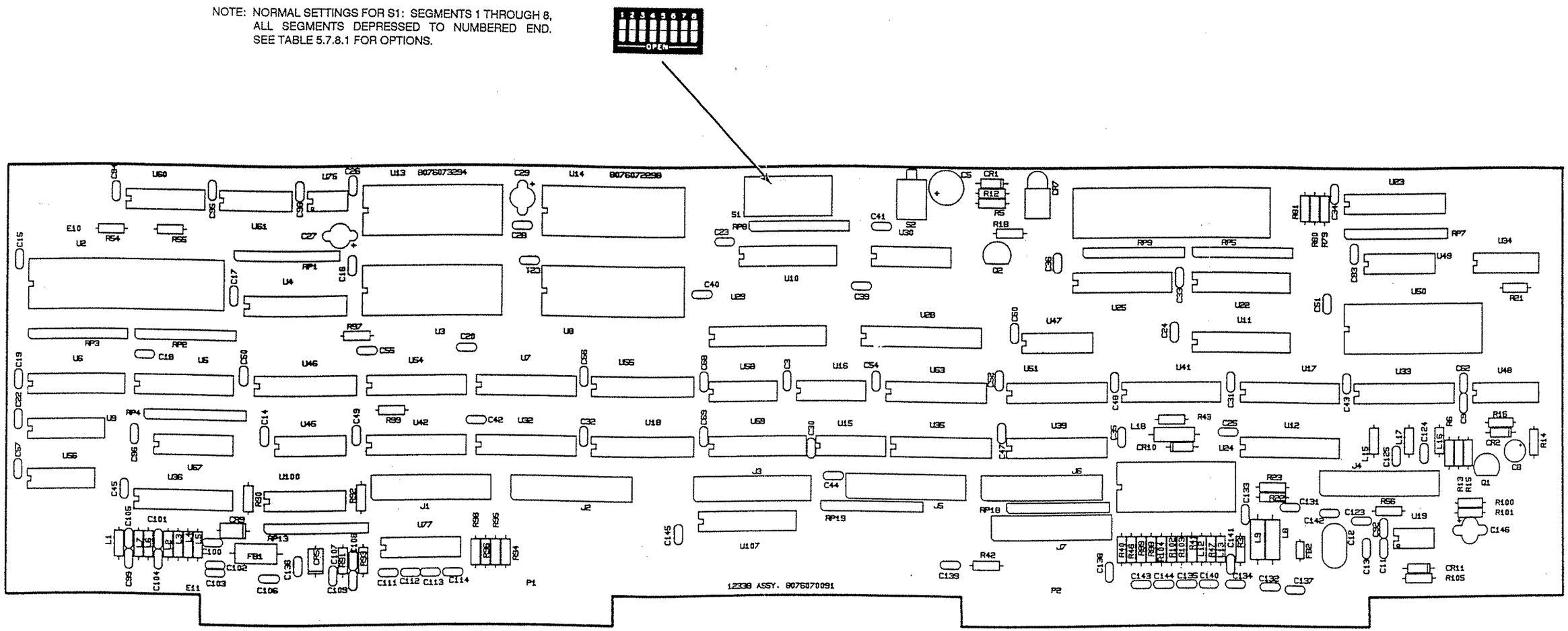

Figure 5.8.4 PC Assembly, CPU 1A2A1, page 2/6.

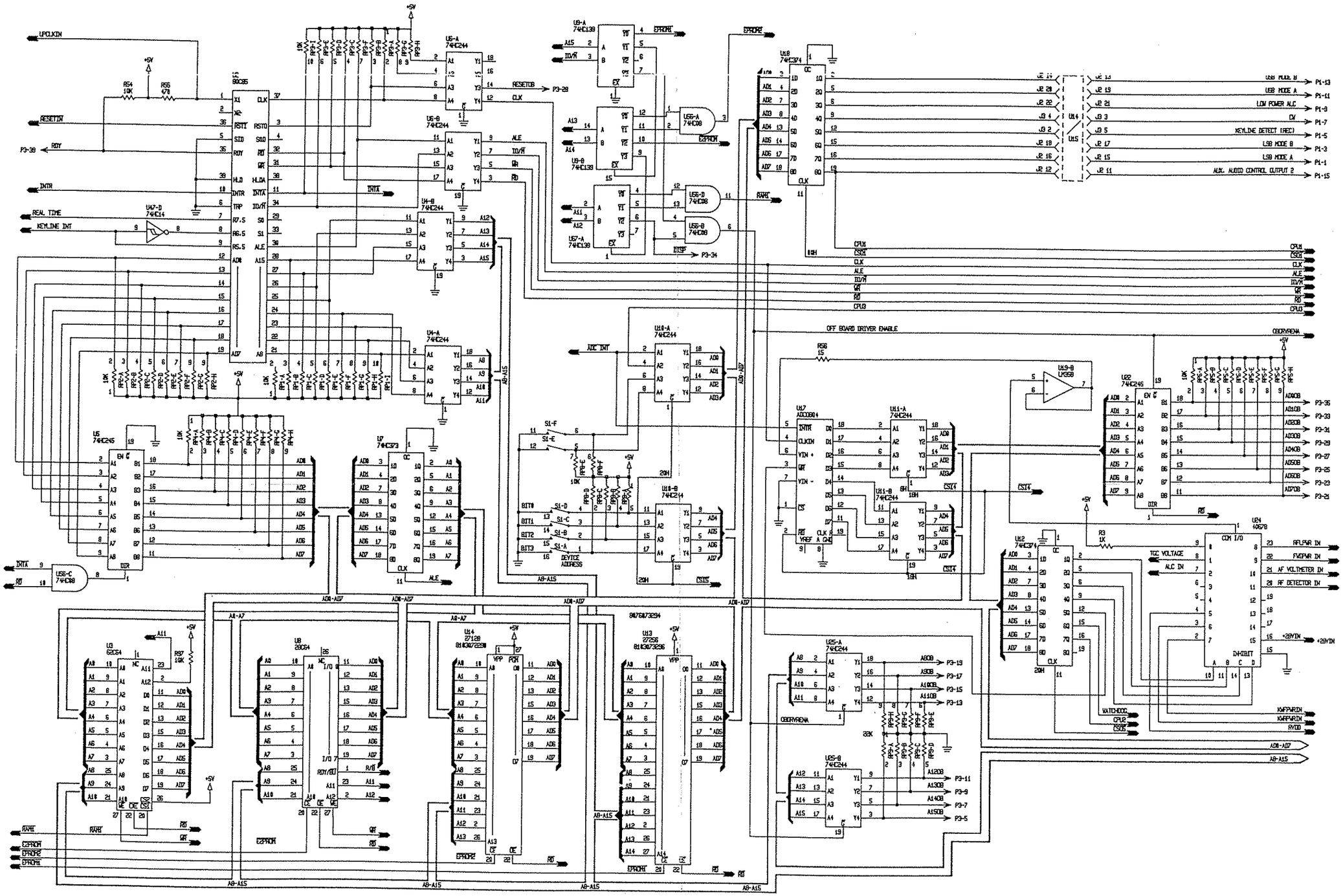

Figure 5.8.4 PC Assembly, CPU 1A2A1, page 3/6.

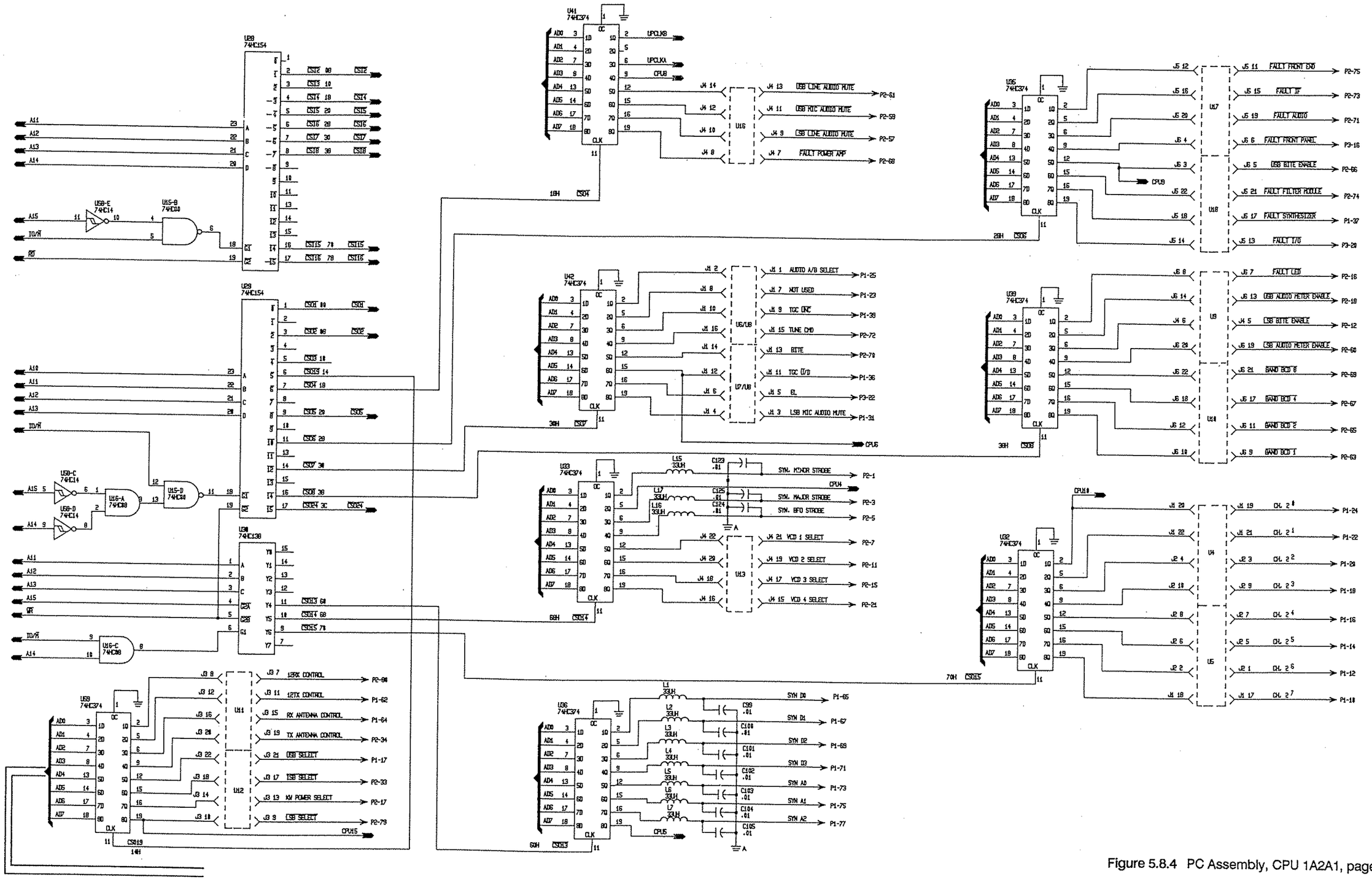

Figure 5.8.4 PC Assembly, CPU 1A2A1, page 4/6.

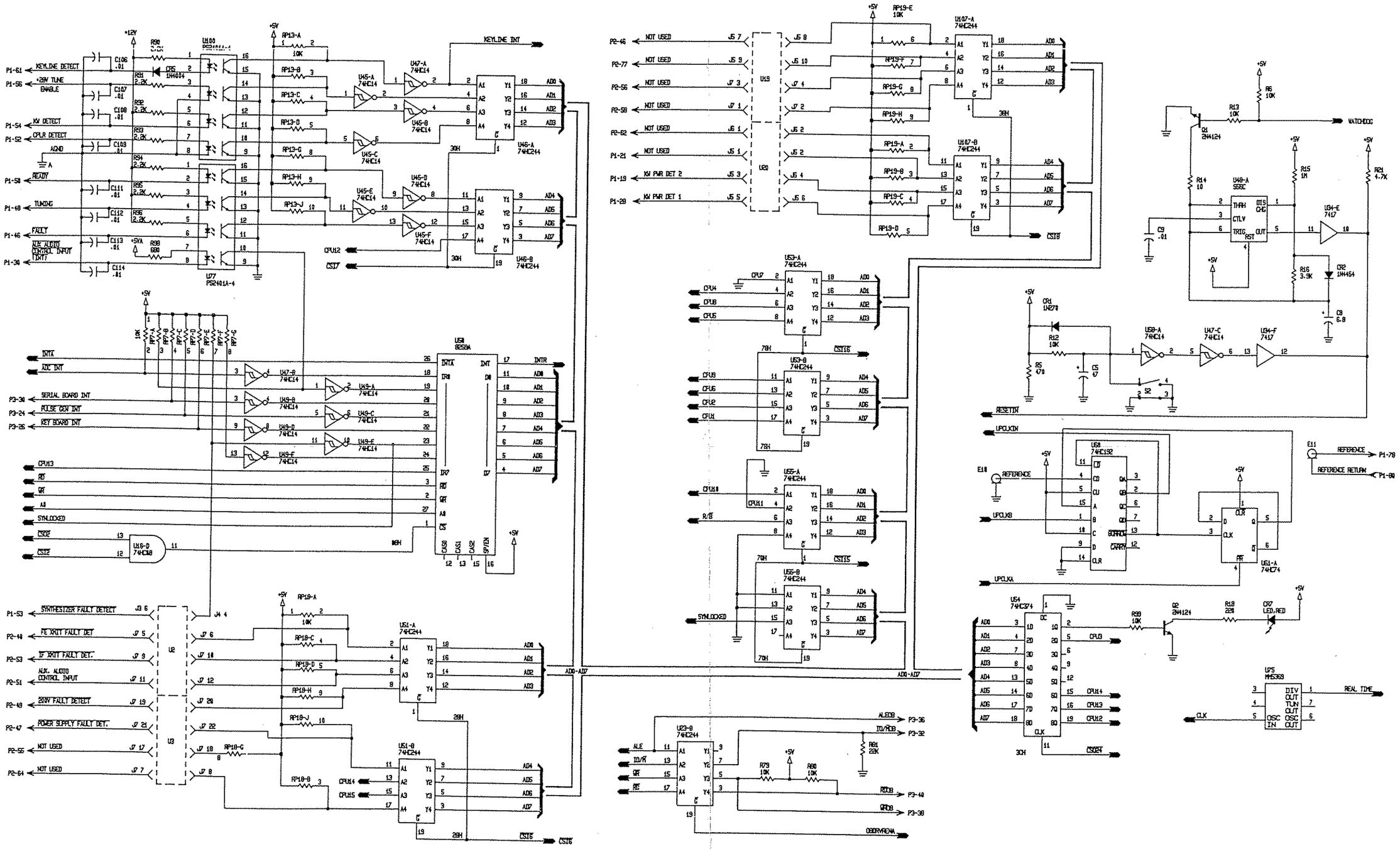

Figure 5.8.4 PC Assembly, CPU 1A2A1, page 5/6.

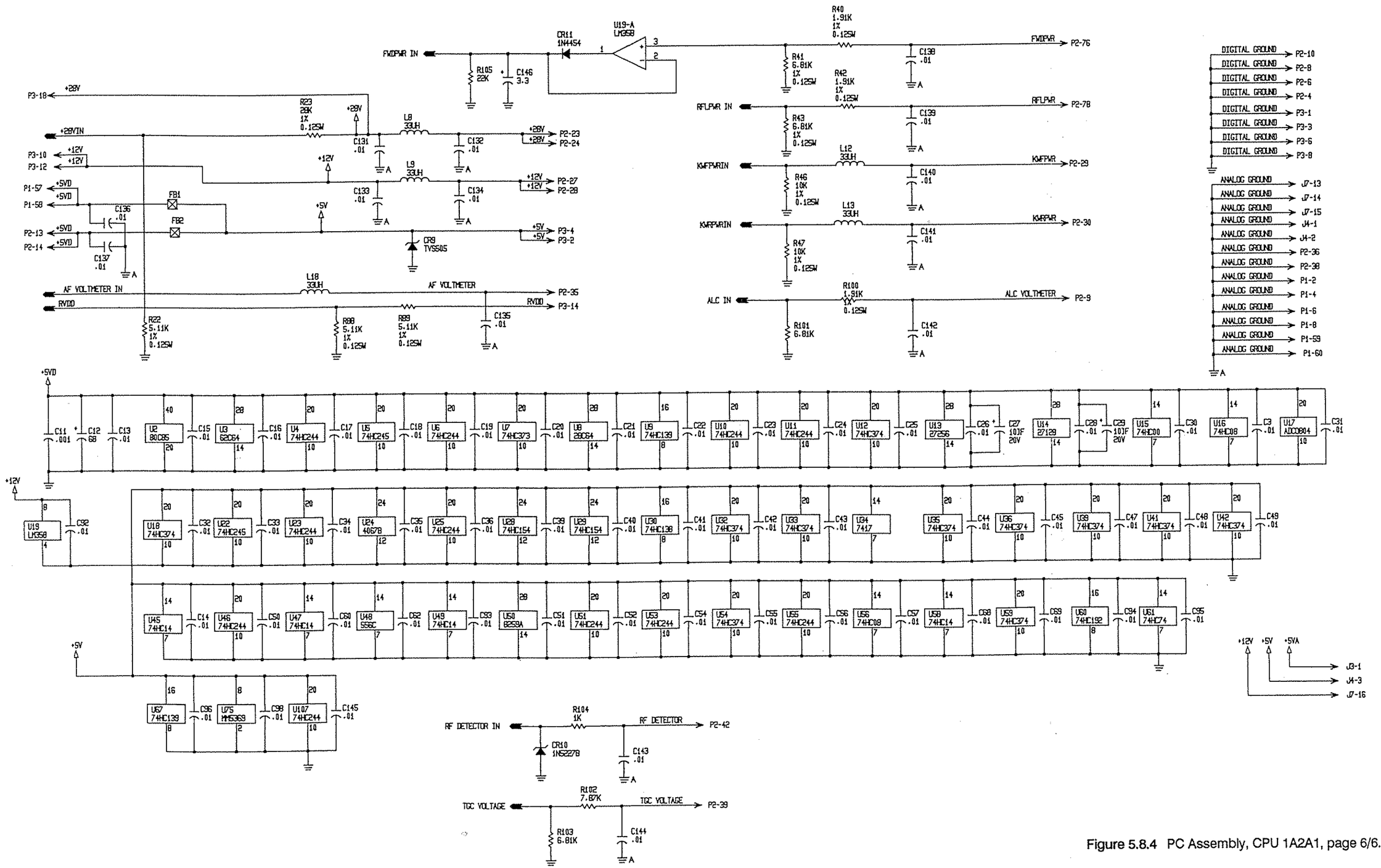

Figure 5.8.4 PC Assembly, CPU 1A2A1, page 6/6.

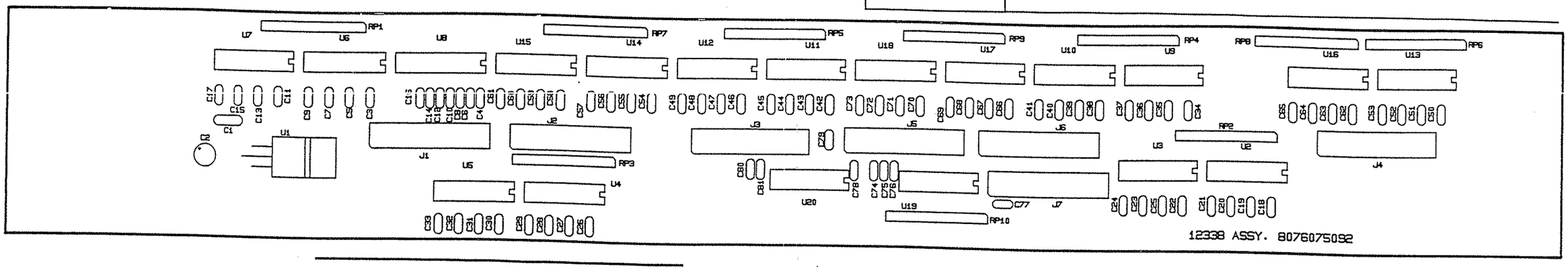

PC ASSY, OPTOCOUPLER 1A2A1A1

	PC ASSY, OPTOCOUPLER 1A2A1A1	8076075092
C1	CAP. .47µF, 50V, X7R 20%	0283377771
C2	CAP. 1µF, 35V, T368	0283630001
C3	CAP. .01µF, 50V, X7R 20%	0281730008
C4	CAP. .01µF, 50V, X7R 20%	0281730008
C5	CAP. .01µF, 50V, X7R 20%	0281730008
C6	CAP. .01µF, 50V, X7R 20%	0281730008
C7	CAP. .01µF, 50V, X7R 20%	0281730008
C8	CAP. .01µF, 50V, X7R 20%	0281730008
C9	CAP. .01µF, 50V, X7R 20%	0281730008
C10	CAP. .01µF, 50V, X7R 20%	0281730008
C11	CAP. .01µF, 50V, X7R 20%	0281730008
C12	CAP. .01µF, 50V, X7R 20%	0281730008
C13	CAP. .01µF, 50V, X7R 20%	0281730008
C14	CAP. .01µF, 50V, X7R 20%	0281730008
C15	CAP. .01µF, 50V, X7R 20%	0281730008
C16	CAP. .01µF, 50V, X7R 20%	0281730008
C17	CAP. .01µF, 50V, X7R 20%	0281730008
C18	CAP. .01µF, 50V, X7R 20%	0281730008
C19	CAP. .01µF, 50V, X7R 20%	0281730008
C20	CAP. .01µF, 50V, X7R 20%	0281730008
C21	CAP. .01µF, 50V, X7R 20%	0281730008
C22	CAP. .01µF, 50V, X7R 20%	0281730008
C23	CAP. .01µF, 50V, X7R 20%	0281730008
C24	CAP. .01µF, 50V, X7R 20%	0281730008
C25	CAP. .01µF, 50V, X7R 20%	0281730008
C26	CAP. .01µF, 50V, X7R 20%	0281730008
C27	CAP. .01µF, 50V, X7R 20%	0281730008
C28	CAP. .01µF, 50V, X7R 20%	0281730008
C29	CAP. .01µF, 50V, X7R 20%	0281730008
C30	CAP. .01µF, 50V, X7R 20%	0281730008
C31	CAP. .01µF, 50V, X7R 20%	0281730008
C32	CAP. .01µF, 50V, X7R 20%	0281730008
C33	CAP. .01µF, 50V, X7R 20%	0281730008
C34	CAP. .01µF, 50V, X7R 20%	0281730008
C35	CAP. .01µF, 50V, X7R 20%	0281730008
C36	CAP. .01µF, 50V, X7R 20%	0281730008
C37	CAP. .01µF, 50V, X7R 20%	0281730008
C38	CAP. .01µF, 50V, X7R 20%	0281730008
C39	CAP. .01µF, 50V, X7R 20%	0281730008
C40	CAP. .01µF, 50V, X7R 20%	0281730008
C41	CAP. .01µF, 50V, X7R 20%	0281730008
C42	CAP. .01µF, 50V, X7R 20%	0281730008
C43	CAP. .01µF, 50V, X7R 20%	0281730008
C44	CAP. .01µF, 50V, X7R 20%	0281730008
C45	CAP. .01µF, 50V, X7R 20%	0281730008
C46	CAP. .01µF, 50V, X7R 20%	0281730008
C47	CAP. .01µF, 50V, X7R 20%	0281730008
C48	CAP. .01µF, 50V, X7R 20%	0281730008
C49	CAP. .01µF, 50V, X7R 20%	0281730008
C50	CAP. .01µF, 50V, X7R 20%	0281730008
C51	CAP. .01µF, 50V, X7R 20%	0281730008
C52	CAP. .01µF, 50V, X7R 20%	0281730008
C53	CAP. .01µF, 50V, X7R 20%	0281730008
C54	CAP. .01µF, 50V, X7R 20%	0281730008
C55	CAP. .01µF, 50V, X7R 20%	0281730008
C56	CAP. .01µF, 50V, X7R 20%	0281730008
C57	CAP. .01µF, 50V, X7R 20%	0281730008
C58	CAP. .01µF, 50V, X7R 20%	0281730008
C59	CAP. .01µF, 50V, X7R 20%	0281730008
C60	CAP. .01µF, 50V, X7R 20%	0281730008
C61	CAP. .01µF, 50V, X7R 20%	0281730008
C62	CAP. .01µF, 50V, X7R 20%	0281730008
C63	CAP. .01µF, 50V, X7R 20%	0281730008
C64	CAP. .01µF, 50V, X7R 20%	0281730008
C65	CAP. .01µF, 50V, X7R 20%	0281730008
C66	CAP. .01µF, 50V, X7R 20%	0281730008
C67	CAP. .01µF, 50V, X7R 20%	0281730008
C68	CAP. .01µF, 50V, X7R 20%	0281730008
C69	CAP. .01µF, 50V, X7R 20%	0281730008
C70	CAP. .01µF, 50V, X7R 20%	0281730008
C71	CAP. .01µF, 50V, X7R 20%	0281730008
C72	CAP. .01µF, 50V, X7R 20%	0281730008
C73	CAP. .01µF, 50V, X7R 20%	0281730008
C74	CAP. .01µF, 50V, X7R 20%	0281730008
C75	CAP. .01µF, 50V, X7R 20%	0281730008
C76	CAP. .01µF, 50V, X7R 20%	0281730008
C77	CAP. .01µF, 50V, X7R 20%	0281730008
C78	CAP. .01µF, 50V, X7R 20%	0281730008
C79	CAP. .01µF, 50V, X7R 20%	0281730008
C80	CAP. .01µF, 50V, X7R 20%	0281730008
C81	CAP. .01µF, 50V, X7R 20%	0281730008
J1	HEADER, PIN STRIP, 22 PIN	1010930010
J2	HEADER, PIN STRIP, 22 PIN	1010930010
J3	HEADER, PIN STRIP, 22 PIN	1010930010
J4	HEADER, PIN STRIP, 22 PIN	1010930010
J5	HEADER, PIN STRIP, 22 PIN	1010930010
J6	HEADER, PIN STRIP, 22 PIN	1010930010
J7	HEADER, PIN STRIP, 22 PIN	1010930010
RP1	RES NTWK 10 PIN SIP 680 COM	1010640003
RP2	RES NTWK 10 PIN SIP 680 COM	1010640003
RP3	RES NTWK 10 PIN SIP 680 COM	1010640003
RP4	RES NTWK 10 PIN SIP 680 COM	1010640003
RP5	RES NTWK 10 PIN SIP 680 COM	1010640003
RP6	RES NTWK 10 PIN SIP 680 COM	1010640003
RP7	RES NTWK 10 PIN SIP 680 COM	1010640003
RP8	RES NTWK 10 PIN SIP 680 COM	1010640003
RP9	RES NTWK 10 PIN SIP 680 COM	1010640003
RP10	RES NTWK 10 PIN SIP 680 COM	1010640003
U1	IC. LINEAR LM340T5	0448600005
U2	IC. DIGITAL 2501-4	1010630008
U3	IC. DIGITAL 2501-4	1010630008
U4	IC. DIGITAL 2501-4	1010630008
U5	IC. DIGITAL 2501-4	1010630008
U6	IC. DIGITAL 2501-4	1010630008
U7	IC. DIGITAL 2501-4	1010630008
U8	IC. DIGITAL UDN-2981	1006330038
U9	IC. DIGITAL 2501-4	1010630008
U10	IC. DIGITAL 2501-4	1010630008
U11	IC. DIGITAL 2501-4	1010630008
U12	IC. DIGITAL 2501-4	1010630008
U13	IC. DIGITAL 2501-4	1010630008
U14	IC. DIGITAL 2501-4	1010630008
U15	IC. DIGITAL 2501-4	1010630008
U16	IC. DIGITAL 2501-4	1010630008
U17	IC. DIGITAL 2501-4	1010630008
U18	IC. DIGITAL 2501-4	1010630008
U19	IC. DIGITAL 2501-4	1010630008
U20	IC. DIGITAL 2501-4	1010630008

Figure 5.8.5 PC Assembly Optocoupler 1A2A1A1, page 1/2.

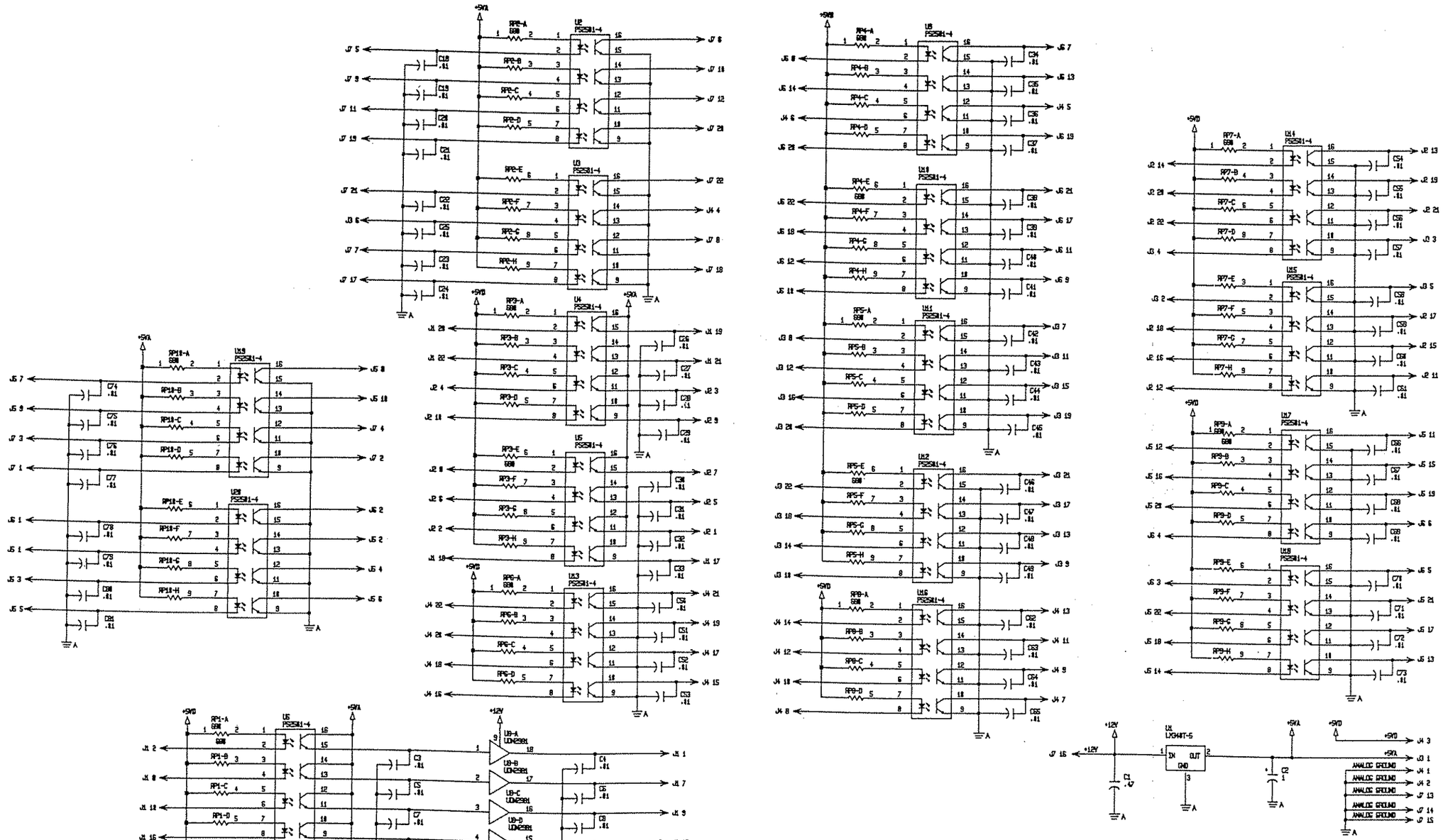

Figure 5.8.5 PC Assembly Optocoupler 1A2A1A1, page 2/2.

THIS PAGE INTENTIONALLY LEFT BLANK.

SYNTHESIZER MODULE 1A2A2

	SYNTHESIZER MODULE 1A2A2	8076060095
	COVER, BFO ASSY	8076062501
	COVER, REFERENCE LOOP ASSY	8076064503
	COVER, SECOND L.O. ASSY	8076066506
	COVER, FIRST L.O. ASSY	8076068509
	MOUNTING PLATE, SYNTHESIZER	8076060800
1A2A2A5	PC ASSY, SYN MOTHER BOARD	8076061091
1A2A2A3	PC ASSY. BFO	8076062098
1A2A2A4	PC ASSY. REF LOOP AND DOUBLER	8076064091
1A2A2A2	PC ASSY. SECOND L.O.	8076066093
1A2A2A1	PC ASSY. FIRST L.O.	8076068096
	STANDOFF, M-F, 4-40 X. 500L	1011000008

Figure 5.8.6 Synthesizer Module 1A2A2 PC Assembly, page 1/1.

PC ASSY, SYNTHESIZER MOTHER BOARD 1A2A2A5

	PC ASSY, SYN MOTHER BOARD 1A2A2A5	8076061091
C1	CAP. 1µF, 35V, T368	0283630001
C2	CAP. .47µF, 50V, X7R 20%	0283377771
C3	CAP. .47µF, 50V, X7R 20%	0283377771
C4	CAP. .47µF, 50V, X7R 20%	0283377771
C5	CAP. .47µF, 50V, X7R 20%	0283377771
C6	CAP. .47µF, 50V, X7R 20%	0283377771
C7	CAP. .47µF, 50V, X7R 20%	0283377771
C8	CAP. .47µF, 50V, X7R 20%	0283377771
C9	CAP. 47µF, 35V	0282190007
C10	CAP. 47µF, 35V	0282190007
C11	CAP. 47µF, 20V, 196D	0281700001
C12	CAP. 47µF, 20V, 196D	0281700001
C13	CAP. .47µF, 50V, X7R 20%	0283377771
CR1	DIODE, LED, RED, PC MOUNT	1008480029
CR2	DIODE, LED, RED, PC MOUNT	1008480029
CR3	DIODE, LED, RED, PC MOUNT	1008480029
CR4	DIODE, LED, RED, PC MOUNT	1008480029
CR5	DIODE, LED, RED, PC MOUNT	1008480029
CR6	DIODE, SIGNAL, SIL. 1N4454	0405270003
CR7	DIODE, SIGNAL, SIL. 1N4454	0405270003
CR8	DIODE, SIGNAL, SIL. 1N4454	0405270003
CR9	DIODE, SIGNAL, SIL. 1N4454	0405270003
CR10	DIODE, SIGNAL, SIL. 1N4454	0405270003
CR11	DIODE, LED, RED, PC MOUNT	1008480029
J1	SOCKET, BOARDMOUNT, 22 PIN	1011010224
J2	SOCKET, BOARDMOUNT, 25 PIN	1011010259
J3	SOCKET, BOARDMOUNT, 25 PIN	1011010259
J4	SOCKET, BOARDMOUNT, 15 PIN	1011010151
J5	SOCKET, BOARDMOUNT, 12 PIN	1011010127
J6	SOCKET, BOARDMOUNT, 12 PIN	1011010127
J7	SOCKET, BOARDMOUNT, 3 PIN	1011010038
J8	SOCKET, BOARDMOUNT, 3 PIN	1011010038
J9	SOCKET, BOARDMOUNT, 3 PIN	1011010038
L1	INDUCTOR, MOLDED, 680µH, 10%	0664320007
L2	INDUCTOR, MOLDED, 680µH, 10%	0664320007
L3	INDUCTOR, MOLDED, 1000µH, 10%	0664940005
Q1	TRANSISTOR, NPN, SI. 2N4124	0448010003
R1	RESISTOR, 120, 10%, 1W	0197600000
R2	RESISTOR, 120, 10%, 1W	0197600000
R3	RESISTOR 270, 10%, 1/4W	0178450006
R4	RESISTOR 270, 10%, 1/4W	0178450006
R5	RESISTOR 270, 10%, 1/4W	0178450006
R6	RESISTOR 270, 10%, 1/4W	0178450006
R7	RESISTOR 270, 10%, 1/4W	0178450006
R8	RESISTOR 270, 10%, 1/4W	0178450006
R9	RESISTOR 150, 10%, 1W	0187840008
R10	RESISTOR 10K, 10%, 1/4W	0170410005
R11	RESISTOR 47K, 10%, 1/4W	0171060008
R12	RESISTOR 150, 10%, 1W	0187840008
U1	IC. LINEAR MC7824CT	0448480000
U2	IC. LINEAR LM340/7812	1003410022
U3	IC. LINEAR LM340T5	0448600005
	CONNECTOR, RF,RIGHT ANGLE	1010730002

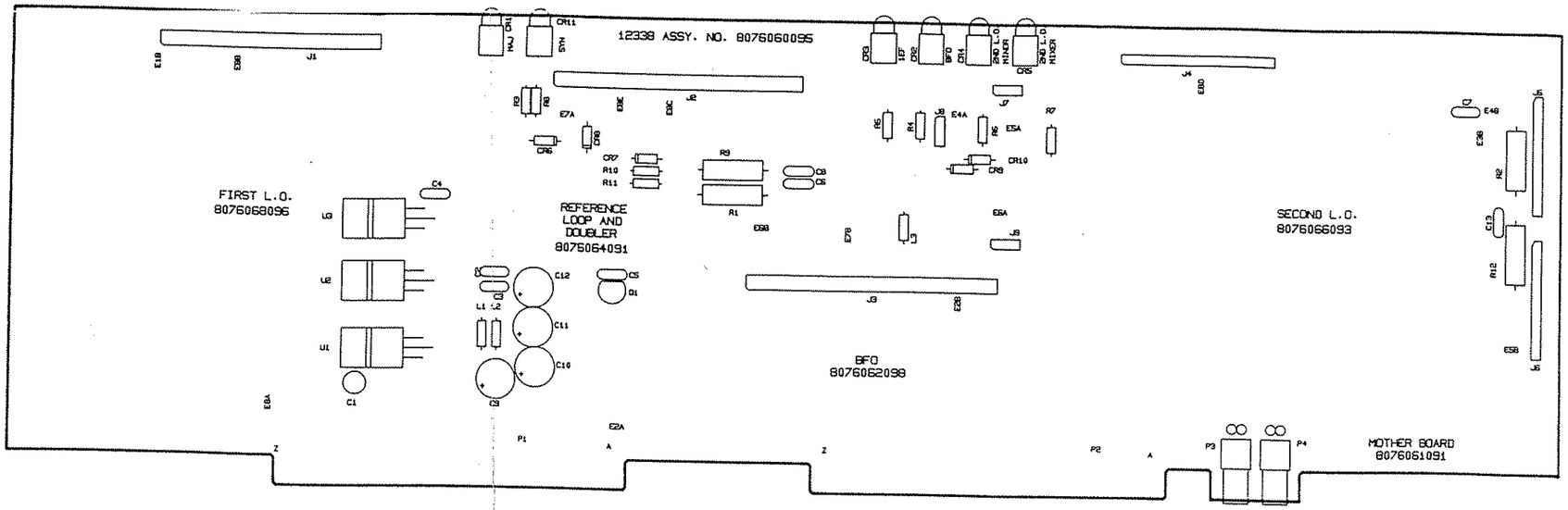

J4	CONNECTOR, PC, 22PIN DUAL,FEM	1008830003
J5	CONNECTOR, PC, 22PIN DUAL,FEM	1008830003
J6	CONNECTOR, PC, 22PIN DUAL,FEM	1008830003
J7	CONNECTOR, PC, 22PIN DUAL,FEM	1008830003
J8	CONNECTOR, PC, 22PIN DUAL,FEM	1008830003
J9	CONNECTOR, PC, 22PIN DUAL,FEM	1008830003
J10	CONNECTOR, PC, 22PIN DUAL,FEM	1008830003
J11	CONNECTOR, PC, 6 PIN DUAL, FEM	1011160005
J13	CONNECTOR, RF, JACK	1010810006
J14	CONNECTOR, RF, JACK	1010810006
J15	CONNECTOR, RF, JACK	1010810006
J16	CONNECTOR, RF, JACK	1010810006
J17	CONNECTOR, RF, JACK	1010810006
J18	CONNECTOR, RF, JACK	1010810006
J19	CONNECTOR, RF, JACK	1010810006
J20	CONNECTOR, RF, JACK	1010810006
J21	CONNECTOR, RF, JACK	1010810006
J22	CONNECTOR, RF, JACK	1010810006
L1	INDUCTOR, MOLDED, 47µH, 5%	0646420003
L2	CHOKE, POWER	8076104700
L3	CHOKE, POWER	8076104700
L4	CHOKE, POWER	8076104700

L5	CHOKE, POWER	8076104700
L6	CHOKE, POWER	8076104700
L7	CHOKE, POWER	8076104700
L8	CHOKE, POWER	8076104700
P4	CONNECTOR, RIBBON, 26 PIN FEM	1008340031
P5	CONNECTOR, RIBBON, 26 PIN FEM	1008340031
P6	CONNECTOR, RIBBON, 20 PIN FEM	1008120031
P7	CONNECTOR, RIBBON, 20 PIN FEM	1008120031
P8	CONNECTOR, RIBBON, 20 PIN FEM	1008120031
P9	CONNECTOR, RIBBON, 20 PIN FEM	1008120031
XP4	CONNECTOR,PCB,TRANSITION,26PIN	1011090261
XP5	CONNECTOR,PCB,TRANSITION,26PIN	1011090261
XP6	CONNECTOR,PCB,TRANSITION,20PIN	1011090201
XP7	CONNECTOR,PCB,TRANSITION,20PIN	1011090201
XP8	CONNECTOR,PCB,TRANSITION,20PIN	1011090201
XP9	CONNECTOR,PCB,TRANSITION,20PIN	1011090201
	BEAD, FERRITE .200OD,.437LG	1010910019
	CABLE, FLAT, 20 COND. 28AWG	1008080004
	CABLE, FLAT, 26 COND. 28AWG	1011180006
	CONNECTOR, RF, SUBMINIATURE	0753700000
	JACK, PCB, SOLDER MOUNT	1008920002

Figure 5.8.7 Synthesizer Mother Board 1A2A2A5, page 1/2.

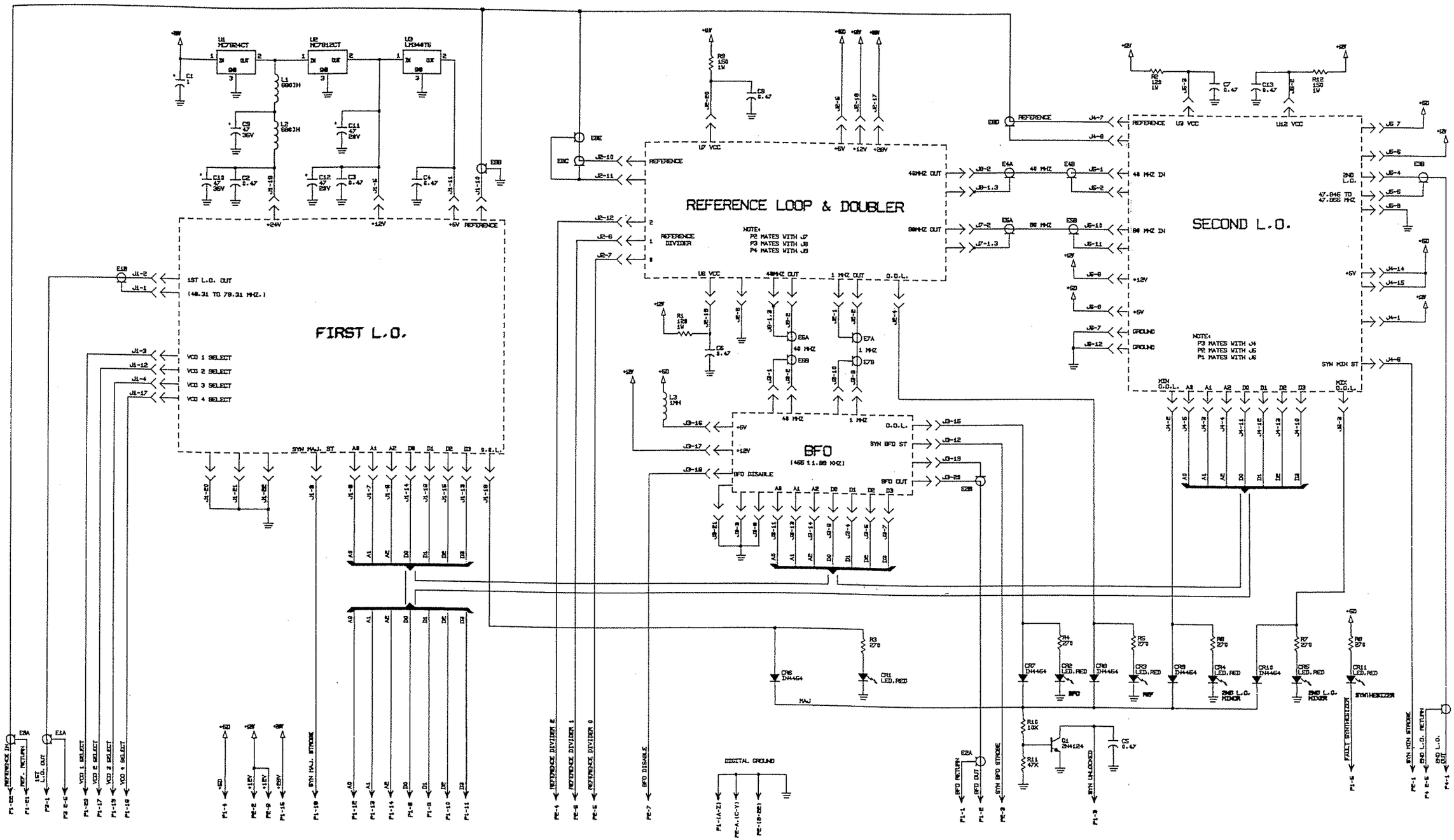

Figure 5.8.7 Synthesizer Mother Board 1A2A2A5, page 2/2.

PC ASSY, FIRST L.O. 1A2A2A1

	PC ASSY, FIRST L.O. 1A2A2A1	8076068096
C1	CAP. 22µF, 15V, T368	0296660001
C2	CAP. .01µF, 50V, X7R 20%	0281730008
C3	CAP. 0.001µF, 100V, X7R, 20%	0281630003
C4	CAP. 0.001µF, 100V, X7R, 20%	0281630003
C5	CAP. 0.001µF, 100V, X7R, 20%	0281630003
C6	CAP. 0.001µF, 100V, X7R, 20%	0281630003
C7	CAP. 0.001µF, 100V, X7R, 20%	0281630003
C8	CAP. 0.001µF, 100V, X7R, 20%	0281630003
C9	CAP. .01µF, 50V, X7R 20%	0281730008
C10	CAP. 0.001µF, 100V, X7R, 20%	0281630003
C11	CAP. 0.001µF, 100V, X7R, 20%	0281630003
C12	CAP. 0.001µF, 100V, X7R, 20%	0281630003
C13	CAP. 0.1µF, 50V, X7R, 20%	0281610002
C14	CAP. .01µF, 50V, X7R 20%	0281730008
C15	CAP. .01µF, 50V, X7R 20%	0281730008
C16	CAP. 220PF, 500V, DM10, 2%	1010870009
C17	CAP. 7PF, 500V, DM10	0292400004
C18	CAP. 0.001µF, 100V, X7R, 20%	0281630003
C19	CAP. 0.001µF, 100V, X7R, 20%	0281630003
C20	CAP. 5PF, 500V, DM10	0261190008
C21	CAP. 10PF, 500V, DM10	0259830003
C22	CAP. 110PF, 500V, DM10, 5%	0257750002
C23	CAP. 10PF, 500V, DM10	0259830003
C24	CAP. 0.001µF, 100V, X7R, 20%	0281630003
C25	CAP. 8PF, 500V, DM10	0293310009
C26	CAP. 0.001µF, 100V, X7R, 20%	0281630003
C27	CAP. 18PF, 500V, DM10, 5%	0260300004
C28	CAP. 110PF, 500V, DM10, 5%	0257750002
C29	CAP. 10PF, 500V, DM10	0259830003
C30	CAP. 0.1µF, 50V, X7R, 20%	0281610002
C31	CAP. 18PF, 500V, DM10, 5%	0260300004
C32	CAP. 8PF, 500V, DM10	0293310009
C33	CAP. 12PF, 500V, DM10, 5%	0260280003
C34	CAP. 7PF, 500V, DM10	0292400004
C35	CAP. 220PF, 500V, DM10, 2%	1010870009
C36	CAP. 0.001µF, 100V, X7R, 20%	0281630003
C37	CAP. 5PF, 500V, DM10	0261190008
C38	CAP. 220PF, 500V, DM10, 2%	1010870009
C39	CAP. 7PF, 500V, DM10	0292400004
C40	CAP. 8PF, 500V, DM10	0293310009
C41	CAP. 5PF, 500V, DM10	0261190008
C42	CAP. 0.001µF, 100V, X7R, 20%	0281630003
C43	CAP. 10PF, 500V, DM10	0259830003
C44	CAP. 110PF, 500V, DM10, 5%	0257750002
C45	CAP. 10PF, 500V, DM10	0259830003
C46	CAP. 0.001µF, 100V, X7R, 20%	0281630003
C47	CAP. 18PF, 500V, DM10, 5%	0260300004
C48	CAP. 18PF, 500V, DM10, 5%	0260300004
C49	CAP. 0.001µF, 100V, X7R, 20%	0281630003
C50	CAP. 8PF, 500V, DM10	0293310009
C51	CAP. 110PF, 500V, DM10, 5%	0257750002
C52	CAP. 10PF, 500V, DM10	0259830003
C53	CAP. 12PF, 500V, DM10, 5%	0260280003
C54	CAP. 0.001µF, 100V, X7R, 20%	0281630003
C55	CAP. 5PF, 500V, DM10	0261190008
C56	CAP. 220PF, 500V, DM10, 2%	1010870009
C57	CAP. 7PF, 500V, DM10	0292400004
C58	CAP. .01µF, 50V, X7R 20%	0281730008
C59	CAP. .01µF, 50V, X7R 20%	0281730008
C60	CAP. .01µF, 50V, X7R 20%	0281730008
CR1	DIODE, ZENER 1N5235B	0405200005
CR2	DIODE, VARICAP MV409	1007060018
CR3	DIODE, VARICAP MV409	1007060018
CR4	DIODE, HCT CARRIER 5082-2835	0405280009
CR5	DIODE, PIN 5082-3168	1005260001
CR6	DIODE, HCT CARRIER 5082-2835	0405280009
CR7	DIODE, PIN 5082-3168	1005260001
CR8	DIODE, VARICAP MV409	1007060018
CR9	DIODE, VARICAP MV409	1007060018
CR10	DIODE, VARICAP MV409	1007060018
CR11	DIODE, VARICAP MV409	1007060018
CR12	DIODE, HCT CARRIER 5082-2835	0405280009
CR13	DIODE, PIN 5082-3168	1005260001
CR14	DIODE, PIN 5082-3168	1005260001
CR15	DIODE, HCT CARRIER 5082-2835	0405280009
CR16	DIODE, VARICAP MV409	1007060018
CR17	DIODE, VARICAP MV409	1007060018
CR18	DIODE, SIGNAL, SIL. 1N4454	0405270003
L1	INDUCTOR, MOLDED, 1.2µH, 5%	0649910001
L2	INDUCTOR, MOLDED, 1.2µH, 5%	0649910001
L3	INDUCTOR, MOLDED, 1.2µH, 5%	0649910001
L4	INDUCTOR, MOLDED, 1.2µH, 5%	0649910001
L6	INDUCTOR, MOLDED, 1.2µH, 5%	0649910001
L7	INDUCTOR, MOLDED, 1.2µH, 5%	0649910001
L8	INDUCTOR, MOLDED, 1.2µH, 5%	0649910001
L9	INDUCTOR, MOLDED, 1.2µH, 5%	0649910001
L10	INDUCTOR, MOLDED, 1.2µH, 5%	0649910001
L12	INDUCTOR, MOLDED, 1.2µH, 5%	0649910001
L13	INDUCTOR, MOLDED, 1.2µH, 5%	0649910001
L14	INDUCTOR, MOLDED, 1.2µH, 5%	0649910001
L15	INDUCTOR, MOLDED, 1.2µH, 5%	0649910001
L17	INDUCTOR, MOLDED, 1.2µH, 5%	0649910001
L18	INDUCTOR, MOLDED, 1.2µH, 5%	0649910001
L19	INDUCTOR, MOLDED, 1.2µH, 5%	0649910001
L20	INDUCTOR, MOLDED, 1.2µH, 5%	0649910001
L21	INDUCTOR, MOLDED, 1.2µH, 5%	0649910001
L22	INDUCTOR, MOLDED, 1.2µH, 5%	0649910001
L24	INDUCTOR, MOLDED, 1.2µH, 5%	0649910001
L25	INDUCTOR, MOLDED, 1.2µH, 5%	0649910001
L26	INDUCTOR, MOLDED, 1.2µH, 5%	0649910001
L27	INDUCTOR, MOLDED, 1.2µH, 5%	0649910001
L28	INDUCTOR, MOLDED, 1.2µH, 5%	0649910001
L29	INDUCTOR, MOLDED, 1.2µH, 5%	0649910001
L30	INDUCTOR, MOLDED, 1.2µH, 5%	0649910001
P1	HEADER, PIN STRIP, 22 PIN	1011020220
Q1	TRANSISTOR, N-CH. FET U310	1007050039
Q2	TRANSISTOR, PNP, SI 2N4126	0448020009
Q3	TRANSISTOR, N-CH. FET U310	1007050039
Q4	TRANSISTOR, N-CH. FET U310	1007050039
Q5	TRANSISTOR, N-CH. FET U310	1007050039
Q6	TRANSISTOR, N-CH. FET U310	1007050039
Q7	TRANSISTOR, PNP, SI 2N4126	0448020009
Q8	TRANSISTOR, PNP, SI 2N4126	0448020009
Q9	TRANSISTOR, N-CH. FET U310	1007050039
Q10	TRANSISTOR, N-CH. FET U310	1007050039
Q11	TRANSISTOR, N-CH. FET U310	1007050039
Q12	TRANSISTOR, N-CH. FET U310	1007050039
Q13	TRANSISTOR, PNP, SI 2N4126	0448020009
R1	RESISTOR 82, 10%, 1/2W	1010200038
R2	RESISTOR 47, 10%, 1/4W	0179360001
R3	RESISTOR 47, 10%, 1/4W	0179360001
R4	RESISTOR 47, 10%, 1/4W	0179360001
R5	RESISTOR 5.6K, 10%, 1/4W	0183060008
R6	RESISTOR 390, 10%, 1/4W	0178330001
R7	RESISTOR 47, 10%, 1/4W	0179360001
R8	RESISTOR 120, 10%, 1/4W	0186550006
R10	RESISTOR 390, 10%, 1/4W	0178330001
R11	RESISTOR 2.7K, 10%, 1/4W	0186670001
R12	RESISTOR 120, 10%, 1/4W	0186550006
R13	RESISTOR 27K, 10%, 1/4W	0171200004
R14	RESISTOR 100, 5%, 1/4W	0171180003
R15	RESISTOR 100, 5%, 1/4W	0171180003
R16	RESISTOR 10, 5%, 1/4W	0177160004
R17	RESISTOR 47, 10%, 1/4W	0179360001
R18	RESISTOR 1.8K, 10%, 1/4W	0178190004
R19	RESISTOR 6.8K, 5%, 1/4W	0174810008
R20	RESISTOR 10K, 10%, 1/4W	0170410005
R21	RESISTOR 47, 10%, 1/4W	0179360001
R22	RESISTOR 47K, 10%, 1/4W	0171060008
R23	RESISTOR 4.7K, 5%, 1/4W	0170770001
R24	RESISTOR 10K, 10%, 1/4W	0170410005
R25	RESISTOR 10K, 10%, 1/4W	0170410005
R26	RESISTOR 10K, 10%, 1/4W	0170410005
R27	RESISTOR 47, 10%, 1/4W	0179360001
R28	RESISTOR 47, 10%, 1/4W	0179360001
R29	RESISTOR 47K, 10%, 1/4W	0171060008
R30	RESISTOR 120, 10%, 1/4W	0186550006
R31	RESISTOR 1.8K, 10%, 1/4W	0178190004
R32	RESISTOR 120, 10%, 1/4W	0186550006
R33	RESISTOR 47, 10%, 1/4W	0179360001
R34	RESISTOR 47, 10%, 1/4W	0179360001
R35	RESISTOR 10K, 10%, 1/4W	0170410005
R36	RESISTOR 1.8K, 10%, 1/4W	0178190004
R37	RESISTOR 47K, 10%, 1/4W	0171060008
R38	RESISTOR 10K, 10%, 1/4W	0170410005
R39	RESISTOR 10K, 10%, 1/4W	0170410005
R40	RESISTOR 47K, 10%, 1/4W	0171060008
R41	RESISTOR 1.8K, 10%, 1/4W	0178190004
R42	RESISTOR 10K, 10%, 1/4W	0170410005
R43	RESISTOR 47, 10%, 1/4W	0179360001
R44	RESISTOR 47, 10%, 1/4W	0179360001
R45	RESISTOR 820, 10%, 1/4W	0178210005
R46	RESISTOR 120, 10%, 1/4W	0186550006
R47	RESISTOR 390, 10%, 1/4W	0178330001
T1	TRANSFORMER,POWER SPLITTER,1LO	8076068801
U1	IC. DIGITAL MC145146P	1007070005
U2	IC. DIGITAL MC1697	1010370022
U3	IC, DIGITAL SP8716	1010890000
U4	IC. DIGITAL 7404	1003950001
U5	IC. LINEAR CA3096	1005860033

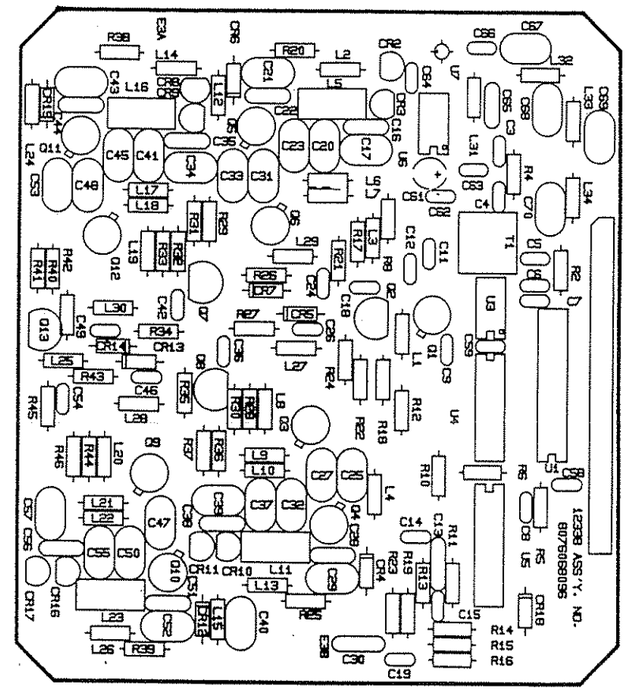

Figure 5.8.8 PC Assembly, First L.O. 1A2A2A1, page 1/2.

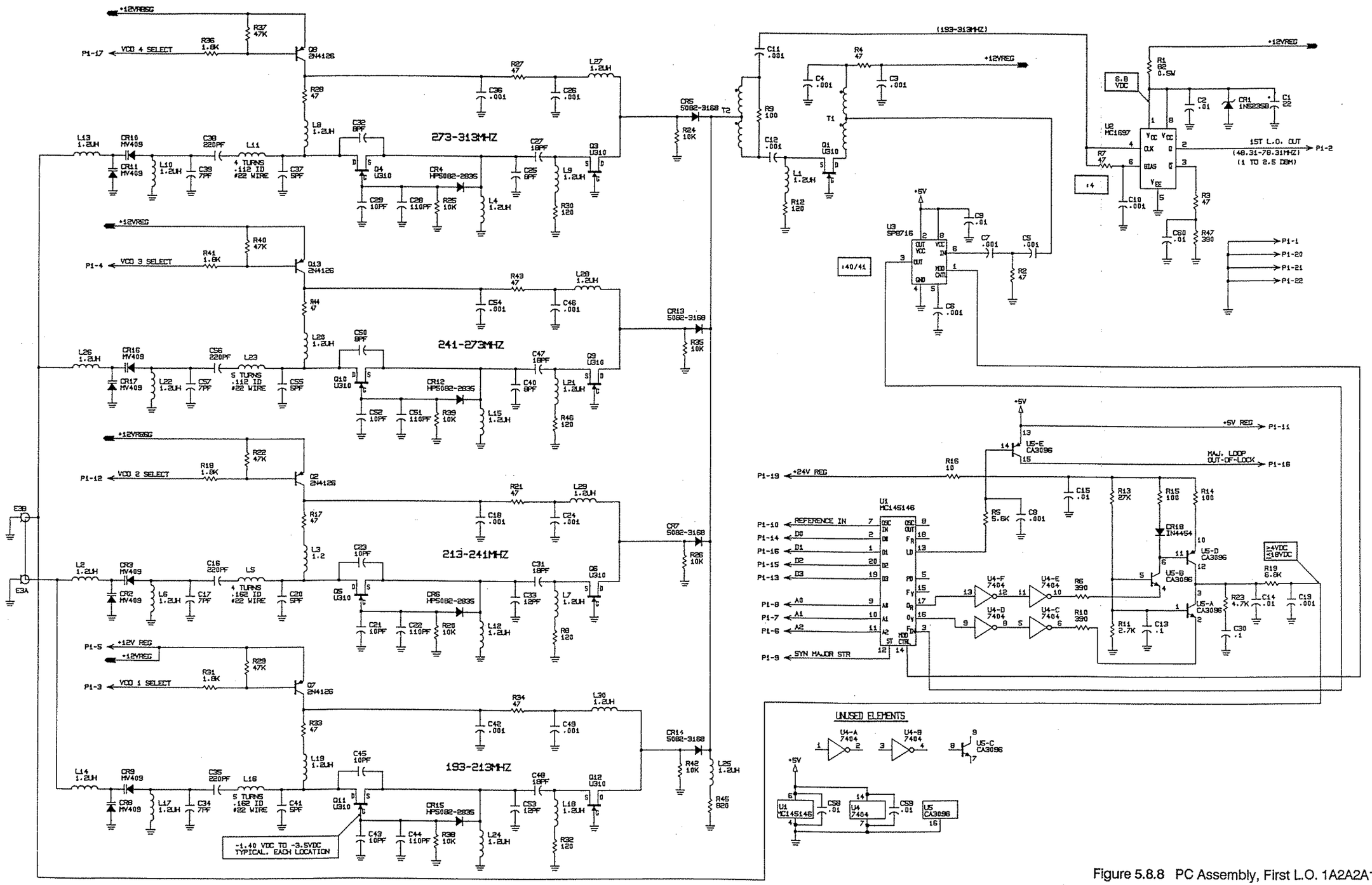

Figure 5.8.8 PC Assembly, First L.O. 1A2A2A1, page 2/2.

THIS PAGE INTENTIONALLY LEFT BLANK.

PC ASSY, SECOND L.O. 1A2A2A2

	PC ASSY, SECOND L.O. 1A2A2A2	8076066093
C1	CAP. .01µF, 50V, X7R 20%	0281730008
C2	CAP. 0.001µF, 100V, X7R, 20%	0281630003
C3	CAP. .47µF, 50V, X7R 20%	0283377771
C4	CAP. 33PF, 500V, DM10, 5%	0260780006
C5	CAP. .01µF, 50V, X7R 20%	0281730008
C7	CAP. 150PF, 500V, DM10, 5%	0293430004
C8	CAP. 200PF, 500V, DM10, 5%	0293050007
C9	CAP. 0.047 µF, 50V, X7R, 10%	1010740008
C10	CAP. 0.001µF, 100V, X7R, 20%	0281630003
C11	CAP. 0.1µF, 50V, X7R, 20%	0281610002
C12	CAP. 5PF, 500V, DM10	0261190008
C13	CAP. 20PF, 500V, DM10, 5%	0260420000
C14	CAP. 36PF, 500V, DM10, 5%	0293550000
C15	CAP. 2PF, 500V, DM10	0259710008
C16	CAP. 150PF, 500V, DM10, 5%	0293430004
C17	CAP. 620PF, 300V, DM15, 2%	0282280006
C18	CAP. 0.001µF, 100V, X7R, 20%	0281630003
C19	CAP. 22µF, 15V, T368	0296660001
C20	CAP. 10PF, 500V, DM10	0259830003
C21	CAP. .01µF, 50V, X7R 20%	0281730008
C22	CAP. 36PF, 500V, DM10, 5%	0293550000
C23	CAP. 200PF, 500V, DM10, 5%	0293050007
C24	CAP. .01µF, 50V, X7R 20%	0281730008
C25	CAP. 5PF, 500V, DM10	0261190008
C26	CAP. .01µF, 50V, X7R 20%	0281730008
C27	CAP. .01µF, 50V, X7R 20%	0281730008
C28	CAP. 0.1µF, 50V, X7R, 20%	0281610002
C30	CAP. .01µF, 50V, X7R 20%	0281730008
C31	CAP. .01µF, 50V, X7R 20%	0281730008
C32	CAP. .01µF, 50V, X7R 20%	0281730008
C33	CAP. 430PF, 500V, DM15, 2%	0282370005
C34	CAP. .01µF, 50V, X7R 20%	0281730008
C35	CAP. 50PF, 500V, DM10, 2%	0260040002
C36	CAP. 120PF, 500V, DM10, 2%	0292880006
C37	CAP. 430PF, 500V, DM15, 2%	0282370005
C38	CAP. 120PF, 500V, DM10, 2%	0292880006
C39	CAP. .01µF, 50V, X7R 20%	0281730008
C41	CAP. .01µF, 50V, X7R 20%	0281730008
C43	CAP. 0.1µF, 50V, X7R, 20%	0281610002
C44	CAP. 0.1µF, 50V, X7R, 20%	0281610002
C45	CAP. 0.001µF, 100V, X7R, 20%	0281630003
C46	CAP. 200PF, 500V, DM10, 5%	0293050007
C47	CAP. 620PF, 300V, DM15, 2%	0282280006
C48	CAP. .47µF, 50V, X7R 20%	0283377771
C49	CAP. .01µF, 50V, X7R 20%	0281730008
C50	CAP. 0.1µF, 50V, X7R, 20%	0281610002
C51	CAP. 200PF, 500V, DM10, 5%	0293050007
C52	CAP. .01µF, 50V, X7R 20%	0281730008
C53	CAP. .01µF, 50V, X7R 20%	0281730008
C54	CAP. 27PF, 500V, DM10, 5%	0260660001
C55	CAP. 0.1µF, 50V, X7R, 20%	0281610002
C56	CAP. 0.1µF, 50V, X7R, 20%	0281610002
C57	CAP. 0.1µF, 50V, X7R, 20%	0281610002
C58	CAP. 24PF, 500V, DM10, 5%	0290060001
C59	CAP. 0.001µF, 100V, X7R, 20%	0281630003
C60	CAP. 68PF, 500V, DM10, 5%	0261070002
C61	CAP. 68PF, 500V, DM10, 5%	0261070002
C64	CAP. 0.1µF, 50V, X7R, 20%	0281610002
C65	CAP. 0.1µF, 50V, X7R, 20%	0281610002
C66	CAP. 0.1µF, 50V, X7R, 20%	0281610002
C67	CAP. 0.1µF, 50V, X7R, 20%	0281610002
C68	CAP. .01µF, 50V, X7R 20%	0281730008
C69	CAP. 0.1µF, 50V, X7R, 20%	0281610002
C70	CAP. .01µF, 50V, X7R 20%	0281730008
C71	CAP. .01µF, 50V, X7R 20%	0281730008
C73	CAP. 0.1µF, 50V, X7R, 20%	0281610002
C74	CAP. .01µF, 50V, X7R 20%	0281730008
C75	CAP. .01µF, 50V, X7R 20%	0281730008
C76	CAP. 100PF, 500V, DM10, 5%	0274747774
CR1	DIODE, VARICAP MV2110	0405290004
CR2	DIODE, VARICAP MV2110	0405290004
CR4	DIODE, SIGNAL, SIL 1N4454	0405270003
CR5	DIODE, SIGNAL, SIL 1N4454	0405270003
CR6	DIODE, VARICAP MV2110	0405290004
CR7	DIODE, VARICAP MV2110	0405290004
CR8	DIODE, SIGNAL, SIL 1N4454	0405270003
CR9	DIODE, SIGNAL, SIL 1N4454	0405270003
L1	INDUCTOR, MOLDED, 4.7µH, 10%	0564250007
L2	INDUCTOR, VAR. .062-.078 µH	1007070030
L3	INDUCTOR, MOLDED, .33µH, 10%	0664200001
L4	INDUCTOR, MOLDED, 1.2µH, 5%	0649910001
L5	INDUCTOR, MOLDED, 1.2µH, 5%	0649910001
L6	INDUCTOR, MOLDED, 4.7µH, 10%	0564250007
L7	INDUCTOR, MOLDED 0.15 µH	1009470001
L8	INDUCTOR, MOLDED, 22µH, 5%	0650000005
L9	INDUCTOR, MOLDED, 4.7µH, 10%	0564250007
L10	INDUCTOR, MOLDED, .33µH, 10%	0664200001
L12	INDUCTOR, MOLDED, 22µH, 5%	0650000005
L13	INDUCTOR, MOLDED, 1.2µH, 5%	0649910001
L14	INDUCTOR, MOLDED, 10µH, 5%	0659570009
L15	INDUCTOR, MOLDED, 1.2µH, 5%	0649910001
L16	INDUCTOR, MOLDED, 10µH, 5%	0659570009
L17	INDUCTOR, MOLDED, 0.22µH, 5%	0650620003
L18	INDUCTOR, VAR. .082-.114 µH	1007080027
L19	INDUCTOR, MOLDED, 4.7µH, 10%	0564250007
L20	INDUCTOR, MOLDED, 3.9µH, 5%	0650480007
L21	INDUCTOR, MOLDED, 10µH, 5%	0659570009
P1	HEADER, PIN STRIP, 12 PIN	1011020122
P2	HEADER, PIN STRIP, 12 PIN	1011020122
P3	HEADER, PIN STRIP, 15 PIN	1011020157
Q1	TRANSISTOR, N-CH. FET U310	1007050039
Q2	TRANSISTOR, NPN, SI 2N5179	0445130008
Q4	TRANSISTOR, NPN, SI. 2N4124	0448010003
Q5	TRANSISTOR, NPN, SI 2N5179	0445130008
Q6	TRANSISTOR, N-CH. FET U310	1007050039
R2	RESISTOR 5.6K, 5%, 1/8W	1010805622
R3	RESISTOR 10K, 5%, 1/8W	1010801031
R4	RESISTOR 2.7K, 5%, 1/8W	1010802721
R5	RESISTOR 270, 5%, 1/8W	1010802712
R6	RESISTOR 270, 5%, 1/8W	1010802712
R7	RESISTOR 18, 5%, 1/8W	1010801805
R8	RESISTOR 270, 5%, 1/8W	1010802712
R9	RESISTOR 220, 5%, 1/8W	1010802216
R10	RESISTOR 100, 5%, 1/8W	1010801015
R11	RESISTOR 100, 5%, 1/8W	1010801015
R12	RESISTOR 220, 5%, 1/8W	1010802216
R13	RESISTOR 1K, 5%, 1/8W	1010801023
R14	RESISTOR 18, 5%, 1/8W	1010801805
R15	RESISTOR 270, 5%, 1/8W	1010802712
R16	RESISTOR 10K, 5%, 1/8W	1010801031
R17	RESISTOR 3.3K, 5%, 1/8W	1010803328
R18	RESISTOR 100, 5%, 1/8W	1010801015
R19	RESISTOR 10, 5%, 1/8W	1010801007
R20	RESISTOR 18, 5%, 1/8W	1010801805
R21	RESISTOR 270, 5%, 1/8W	1010802712
R22	RESISTOR 100, 5%, 1/8W	1010801015
R25	RESISTOR 270, 5%, 1/8W	1010802712
R26	RESISTOR 100, 5%, 1/8W	1010801015
R27	RESISTOR 100K, 5%, 1/8W	1010801040
R28	RESISTOR 18, 5%, 1/8W	1010801805
R29	RESISTOR 100, 5%, 1/8W	1010801015
R30	RESISTOR 270, 5%, 1/8W	1010802712
R31	RESISTOR 180, 5%, 1/8W	1010801813
R32	RESISTOR 270, 5%, 1/8W	1010802712
R33	RESISTOR 6.8K, 5%, 1/8W	1010806823
R34	RESISTOR 470, 5%, 1/8W	1010804715
R35	RESISTOR 4.7K, 5%, 1/8W	1010804723
R36	RESISTOR 3.3K, 5%, 1/8W	1010803328
R37	RESISTOR 3.3K, 5%, 1/8W	1010803328
R38	RESISTOR 100, 5%, 1/8W	1010801015
R39	RESISTOR 18, 5%, 1/8W	1010801805
R40	RESISTOR 270, 5%, 1/8W	1010802712
R41	RESISTOR 270, 5%, 1/8W	1010802712
R42	RESISTOR 10, 5%, 1/8W	1010801007
R43	RESISTOR 470, 5%, 1/8W	1010804715
R44	RESISTOR 3.3K, 5%, 1/8W	1010803328
R45	RESISTOR 2.7K, 5%, 1/8W	1010802721
R46	RESISTOR 10K, 5%, 1/8W	1010801031
R47	RESISTOR 3.3K, 5%, 1/8W	1010803328
R48	RESISTOR 5.6K, 5%, 1/8W	1010805622
R49	RESISTOR 2.7K, 5%, 1/8W	1010802721
R50	RESISTOR 470, 5%, 1/8W	1010804715
R51	RESISTOR 2.7K, 5%, 1/8W	1010802721
R52	RESISTOR 390, 5%, 1/8W	1010803913
R53	RESISTOR 270, 5%, 1/8W	1010802712
R54	RESISTOR 18, 5%, 1/8W	1010801805
R56	RESISTOR 270, 5%, 1/8W	1010802712
R57	RESISTOR 390, 5%, 1/8W	1010803913
R58	RESISTOR 10, 5%, 1/8W	1010801007
R59	RESISTOR 10, 5%, 1/8W	1010801007
R60	RESISTOR 220, 5%, 1/8W	1010802216
R61	RESISTOR 390, 5%, 1/8W	1010803913
R62	RESISTOR 220, 5%, 1/8W	1010802216
R63	RESISTOR 6.8K, 5%, 1/8W	1010806823
R64	RESISTOR 6.8K, 5%, 1/8W	1010806823
R65	RESISTOR 10, 5%, 1/8W	1010801007
R67	RESISTOR 4.7K, 5%, 1/8W	1010804723
R68	RESISTOR 150, 5%, 1/8W	1010801511
R69	RESISTOR 6.8K, 5%, 1/8W	1010806823
R70	RESISTOR 18K, 5%, 1/8W	1010801830
R71	RESISTOR 470, 5%, 1/8W	1010804715
R72	RESISTOR 100, 5%, 1/8W	1010801015
R73	RESISTOR 1.2K, 5%, 1/8W	1010801228
R74	RESISTOR 270, 5%, 1/8W	1010802712
T1	TRANSFORMER, RF, 4:1	1010860003
T2	TRANSFORMER, RF, 4:1	1010860003
U1	IC. DIGITAL MC145146P	1007070005
U2	IC. LINEAR CA3096	1005860033
U3	IC. LINEAR MWA130	1010380036

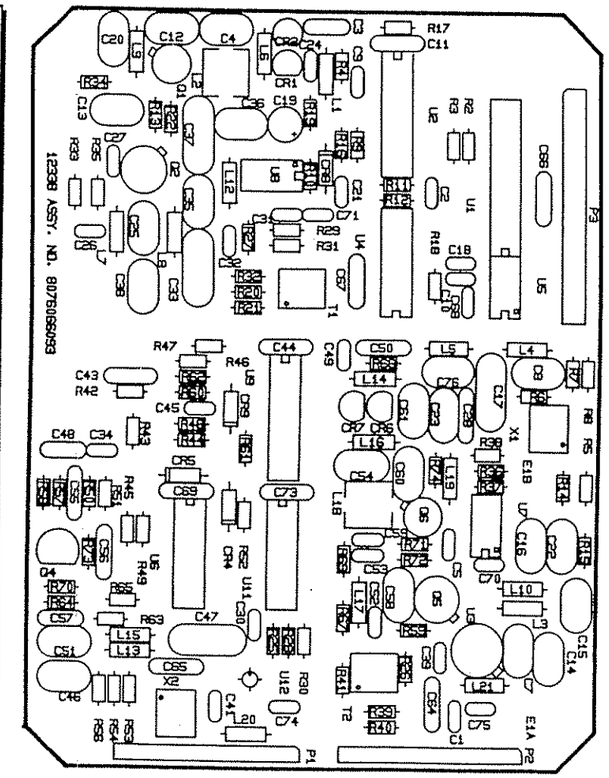

U4	IC. DIGITAL 74HC04	1010280023
U5	IC.DIGITAL SP8793	1007090031
U6	IC. DIGITAL 74LS00	1005500029
U7	IC. DIGITAL SP8660	1010790013
U8	IC. DIGITAL SP8629	1007090022
U9	IC. LINEAR CA3096	1005860033
U11	IC. DIGITAL 74LS74A	1003323600
U12	IC LINEAR MAR-4	1010900005
X1	MIXER, +7DBM ASK-1	1010580001
X2	MIXER, +7DBM ASK-1	1010580001

Figure 5.8.9 PC Assembly, Second L.O. 1A2A2A2, page 1/3.

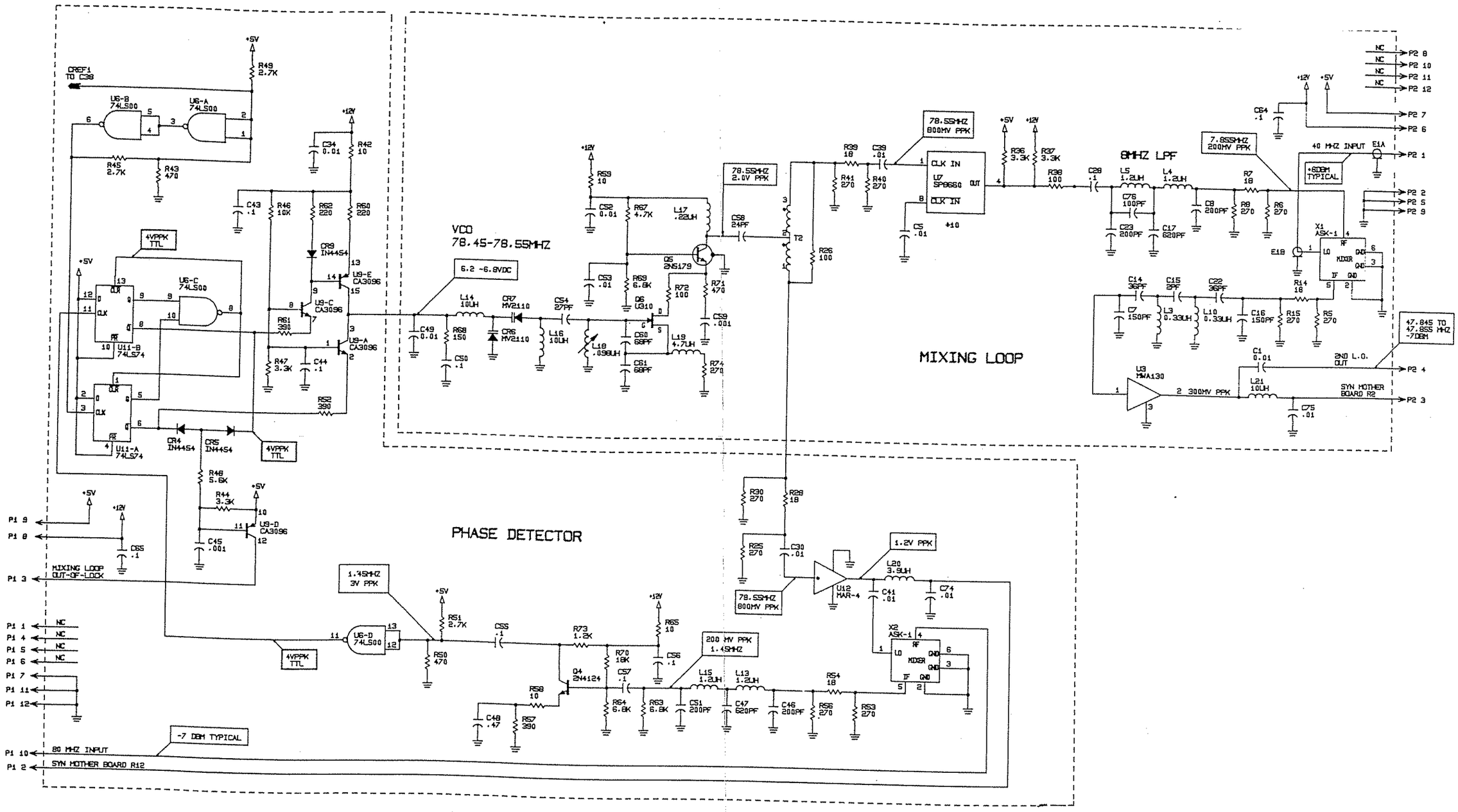

Figure 5.8.9 PC Assembly, Second L.O. 1A2A2A2, page 2/3.

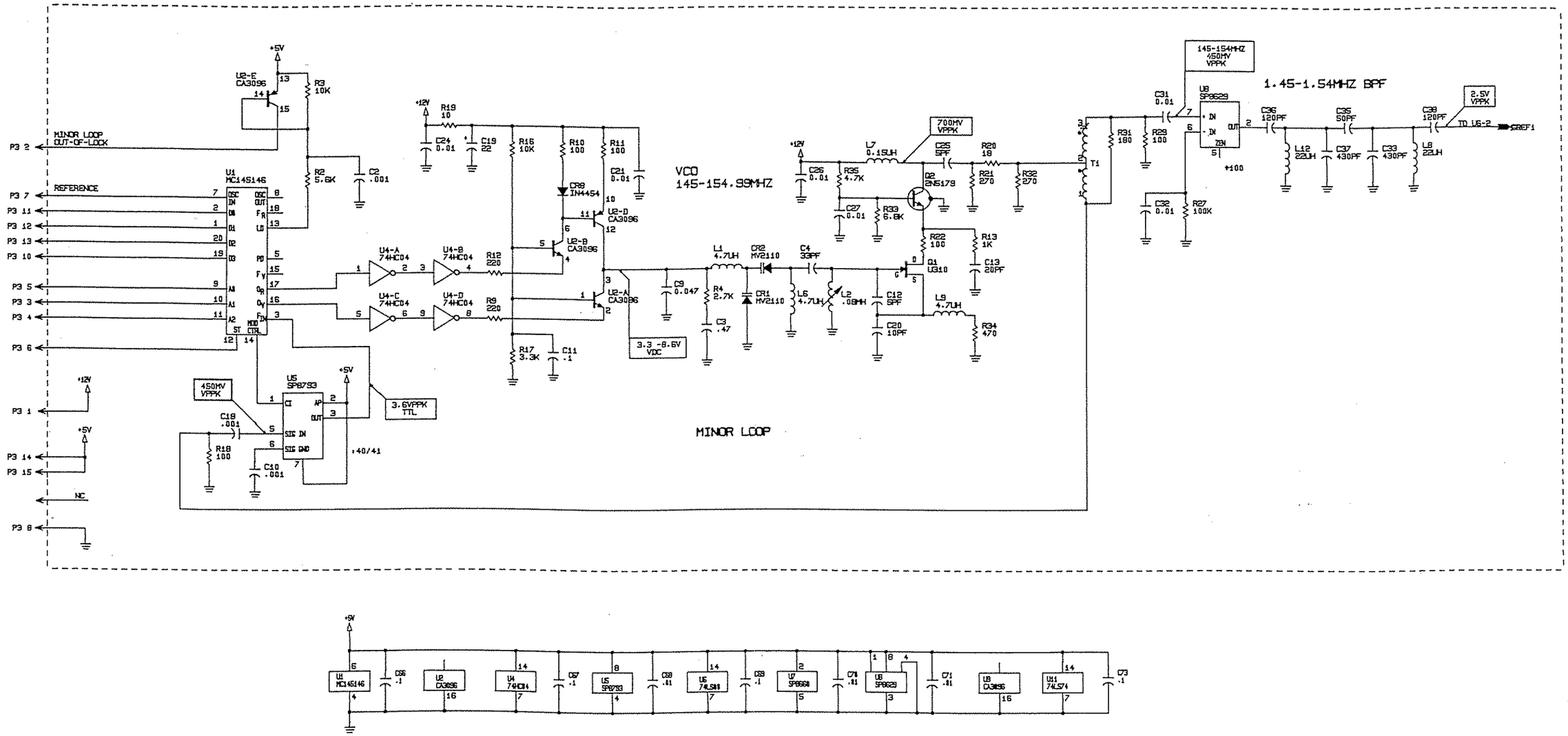

UNUSED ELEMENTS

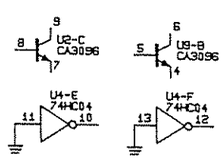

LAST USED
C76
CR9
L21
Q6
R74
T2
U12
X-2

NOT USED
C5,40,42,62,63,72
CR3
L11
Q3
R23,24,40,55,66
U10

Figure 5.8.9 PC Assembly, Second L.O. 1A2A2A2, page 3/3.

PC ASSY, BFO 1A2A2A3

	PC ASSY, BFO 1A2A2A3	8076062098
C1	CAP. .01µF, 50V, X7R 20%	0281730008
C2	CAP. .01µF, 50V, X7R 20%	0281730008
C3	CAP. 22µF, 15V, T368	0296660001
C4	CAP. 15PF, 500V, DM10, 5%	0259950009
C5	CAP. 12PF, 500V, DM10, 5%	0260280003
C6	CAP. .01µF, 50V, X7R 20%	0281730008
C7	CAP. 27PF, 500V, DM10, 5%	0260660001
C8	CAP. 0.1µF, 50V, X7R, 20%	0281610002
C9	CAP. .01µF, 50V, X7R 20%	0281730008
C10	CAP. 20PF, 500V, DM10, 5%	0260420000
C11	CAP. .01µF, 50V, X7R 20%	0281730008
C12	CAP. 22µF, 15V, T368	0296660001
C13	CAP. 27PF, 1000V, N750	0250620006
C14	CAP. 0.1µF, 50V, X7R, 20%	0281610002
C15	CAP. .01µF, 50V, X7R 20%	0281730008
C16	CAP. .01µF, 50V, X7R 20%	0281730008
C17	CAP. 27PF, 500V, DM10, 5%	0260660001
C18	CAP. 22µF, 15V, T368	0296660001
C19	CAP. 0.1µF, 50V, X7R, 20%	0281610002
C20	CAP. .01µF, 50V, X7R 20%	0281730008
C21	CAP. 0.1µF, 50V, X7R, 20%	0281610002
C22	CAP. .01µF, 50V, X7R 20%	0281730008
C23	CAP. 0.001µF, 100V, X7R, 20%	0281630003
C24	CAP. 0.0056µF, 100V, NPO, 5%	1010770004
C25	CAP. 110PF, 500V, DM10, 5%	0257750002
C26	CAP. 0.0027µF, 200V, NPO, 5%	1010760009
C27	CAP. .01µF, 50V, X7R 20%	0281730008
C28	CAP. .01µF, 50V, X7R 20%	0281730008
C29	CAP. 15PF, 500V, DM10, 5%	0259950009
C30	CAP. .01µF, 50V, X7R 20%	0281730008
C31	CAP. 0.1µF, 50V, X7R, 20%	0281610002
C32	CAP. 0.1µF, 50V, X7R, 20%	0281610002
C35	CAP. 22PF, 500V, DM10, 5%	0260540005
CR1	DIODE, SIGNAL, SIL. 1N4454	0405270003
CR2	DIODE, VARICAP MV2110	0405290004
CR3	DIODE, SIGNAL, SIL. 1N4454	0405270003
L1	INDUCTOR, MOLDED, 1.0µH, 5%	0649150007
L2	INDUCTOR, MOLDED, 120µH, 10%	0659330008
L3	INDUCTOR, VAR. .502-.620µH	1007080001
L4	INDUCTOR, MOLDED, 10µH, 5%	0659570009
L5	INDUCTOR, MOLDED, 68µH, 5%	0651650003
L6	INDUCTOR, MOLDED, 150µH, 5%	0659190001
L7	INDUCTOR, MOLDED, 82µH, 5%	0659450003
L8	INDUCTOR, MOLDED, 82µH, 5%	0659450003
L9	INDUCTOR, MOLDED, 10µH, 5%	0659570009
L10	INDUCTOR, MOLDED, 1.0µH, 5%	0649150007
P1	HEADER, PIN STRIP, 25 PIN	1011020254
Q1	TRANSISTOR, NPN, SI. 2N4124	0448010003
Q2	TRANSISTOR, NPN, SI. 2N4124	0448010003
Q3	TRANSISTOR, N-CH. FET U310	1007050039
Q4	TRANSISTOR, N-CH, FET MFE209	1007090014
R1	RESISTOR 10K, 5%, 1/8W	1010801031
R2	RESISTOR 5.6K, 5%, 1/8W	1010805622
R3	RESISTOR 1.2K, 5%, 1/8W	1010801228
R4	RESISTOR 1.2K, 5%, 1/8W	1010801228
R5	RESISTOR 4.7K, 5%, 1/8W	1010804723
R6	RESISTOR 3.3K, 5%, 1/8W	1010803328

R7	RESISTOR 100, 5%, 1/8W	1010801015
R8	RESISTOR 10K, 5%, 1/8W	1010801031
R9	RESISTOR 100K, 5%, 1/8W	1010801040
R10	RESISTOR 100, 5%, 1/8W	1010801015
R11	RESISTOR 470, 5%, 1/8W	1010804715
R12	RESISTOR 470, 5%, 1/8W	1010804715
R13	RESISTOR 18K, 5%, 1/8W	1010801830
R14	RESISTOR 2.2K, 5%, 1/8W	1010802224
R15	RESISTOR 10, 5%, 1/8W	1010801007
R16	RESISTOR 2.2K, 5%, 1/8W	1010802224
R17	RESISTOR 4.7K, 5%, 1/8W	1010804723
R18	RESISTOR 10K, 5%, 1/8W	1010801031
R19	RESISTOR 12K, 5%, 1/8W	1010801236
R20	RESISTOR 10K, 5%, 1/8W	1010801031
R21	RESISTOR 120, 5%, 1/8W	1010801210
R22	RESISTOR 10K, 5%, 1/8W	1010801031
R23	RESISTOR 100K, 5%, 1/8W	1010801040
R24	RESISTOR 12K, 5%, 1/8W	1010801236
R25	RESISTOR 10K, 5%, 1/8W	1010801031
R26	RESISTOR 4.7K, 5%, 1/8W	1010804723
R27	RESISTOR 33, 5%, 1/8W	1010803301
R28	RESISTOR 560, 5%, 1/8W	1010805614
R29	RESISTOR 180, 5%, 1/8W	1010801813
R30	RESISTOR 560, 5%, 1/8W	1010805614
R31	RESISTOR 560, 5%, 1/8W	1010805614
R32	RESISTOR 33, 5%, 1/8W	1010803301
R33	RESISTOR 560, 5%, 1/8W	1010805614
R34	RESISTOR 100, 5%, 1/8W	1010801015
T1	TRANSFORMER, RF, 4:1	1010860003
U1	I.C. DIGITAL MC145145	1007100001
U2	IC. LINEAR CA3096	1005860033
U3	IC. DIGITAL SP8792A	1007100028

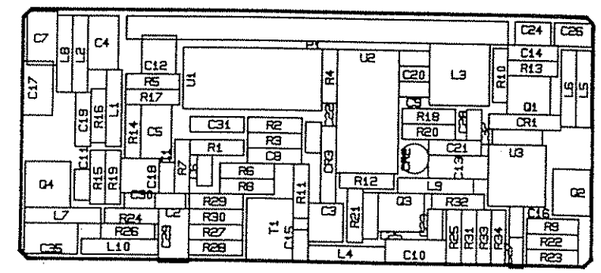

Figure 5.8.10 PC Assembly, BFO 1A2A2A3, page 1/2.

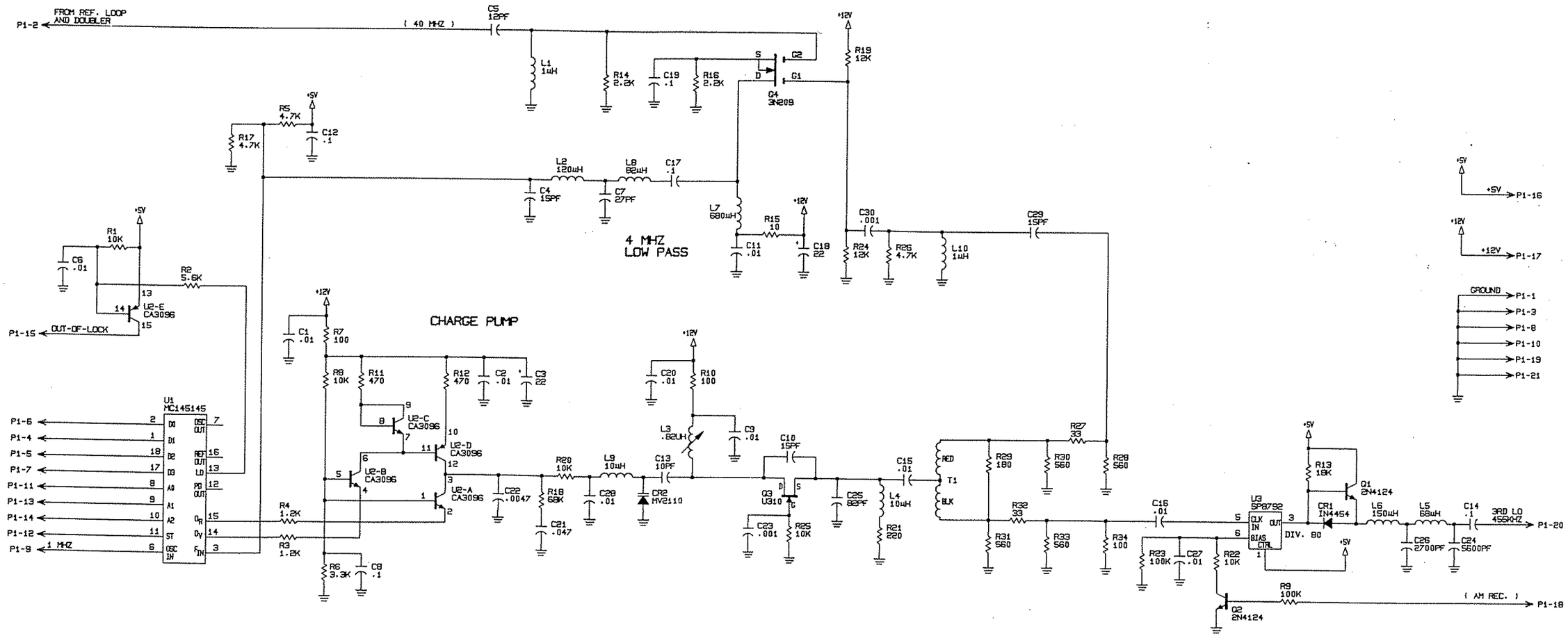

NOTE: ALL RESISTORS 1/8W UNLESS OTHERWISE SPECIFIED

Figure 5.8.10 PC Assembly, BFO 1A2A2A3, page 2/2.

PC ASSY, REF LOOP AND DOUBLER 1A2A2A4

	PC ASSY, REF LOOP AND DBLR 1A2A2A4	8076064091
C1	CAP. 10PF, 1000V, N750	0250480000
C2	CAP. 33PF, 500V, DM10, 5%	0260780006
C3	CAP. 0.1µF, 50V, X7R, 20%	0281610002
C4	CAP. 0.1µF, 50V, X7R, 20%	0281610002
C5	CAP. 200PF, 500V, DM10, 5%	0293050007
C6	CAP. 0.001µF, 100V, X7R, 20%	0281630003
C7	CAP. 68PF, 500V, DM10, 5%	0261070002
C8	CAP. .01µF, 50V, X7R 20%	0281730008
C9	CAP. .01µF, 50V, X7R 20%	0281730008
C10	CAP. .01µF, 50V, X7R 20%	0281730008
C11	CAP. .01µF, 50V, X7R 20%	0281730008
C12	CAP. 15µF, 35V	0282240004
C13	CAP. .01µF, 50V, X7R 20%	0281730008
C14	CAP. .47µF, 50V, X7R 20%	0283377771
C15	CAP. 180PF, 500V, DM10, 5%	0294100008
C16	CAP. 50PF, 500V, DM10, 2%	0260040002
C17	CAP. 0.1µF, 50V, X7R, 20%	0281610002
C18	CAP. .01µF, 50V, X7R 20%	0281730008
C20	CAP. .01µF, 50V, X7R 20%	0281730008
C21	CAP. .01µF, 50V, X7R 20%	0281730008
C22	CAP. 3PF, 300V, CD6	0288560001
C23	CAP. .01µF, 50V, X7R 20%	0281730008
C24	CAP. 0.001µF, 100V, X7R, 20%	0281630003
C25	CAP. .01µF, 50V, X7R 20%	0281730008
C26	CAP. 18PF, 500V, DM10, 5%	0260300004
C27	CAP. 3.3µF, 35V, 196D	0281680001
C28	CAP. 0.001µF, 100V, X7R, 20%	0281630003
C29	CAP. .01µF, 50V, X7R 20%	0281730008
C30	CAP. .01µF, 50V, X7R 20%	0281730008
C31	CAP. 56PF, 500V, DM10, 5%	0293170002
C32	CAP. 18PF, 500V, DM10, 5%	0260300004
C33	CAP. 56PF, 500V, DM10, 5%	0293170002
C34	CAP. .01µF, 50V, X7R 20%	0281730008
C35	CAP. 0.1µF, 50V, X7R, 20%	0281610002
C36	CAP. 0.1µF, 50V, X7R, 20%	0281610002
CR1	DIODE, ZENER 1N5245B	0405210001
CR2	DIODE, VARICAP MV409	1007060018
CR3	DIODE, VARICAP MV409	1007060018
CR4	DIODE, SIGNAL, SIL. 1N4454	0405270003
CR5	DIODE, SIGNAL, SIL. 1N4454	0405270003
CR6	DIODE, HOT CARRIER 5082-2835	0405280009
CR7	DIODE, HOT CARRIER 5082-2835	0405280009
CR8	DIODE, SIGNAL, SIL. 1N4454	0405270003
L1	INDUCTOR, VAR, 3.30µH	0647930005
L2	INDUCTOR, MOLDED, 15µH, 5%	0659070006
L3	INDUCTOR, MOLDED, 15µH, 5%	0659070006
L4	INDUCTOR, MOLDED, 0.39µH, 5%	0649770005
L5	INDUCTOR, MOLDED, 12µH, 5%	0652700004
L6	INDUCTOR, MOLDED, 1.0µH, 5%	0649150007
L7	INDUCTOR, MOLDED, 3.9µH, 5%	0650480007
L8	INDUCTOR, MOLDED, 0.22µH, 5%	0650620003
L9	INDUCTOR, MOLDED, 0.22µH, 5%	0650620003
L10	INDUCTOR, MOLDED, 68µH, 5%	0651650003
L11	INDUCTOR, MOLDED, 1.2µH, 5%	0649910001
P1	HEADER, PIN STRIP, 25 PIN	1011020254
P2	HEADER, PIN STRIP, 3 PIN	1011020033
P3	HEADER, PIN STRIP, 3 PIN	1011020033

P4	HEADER, PIN STRIP, 3 PIN	1011020033
Q1	TRANSISTOR, NPN, SI 2N5179	0445130008
Q2	TRANSISTOR, NPN, SI 2N5179	0445130008
R1	RESISTOR 270, 5%, 1/8W	1010802712
R2	RESISTOR 560, 5%, 1/8W	1010805614
R3	RESISTOR 5.6K, 5%, 1/8W	1010805622
R4	RESISTOR 1.8K, 5%, 1/8W	1010801821
R5	RESISTOR 560, 5%, 1/8W	1010805614
R6	RESISTOR 10K, 5%, 1/8W	1010801031
R7	RESISTOR 10, 5%, 1/8W	1010801007
R8	RESISTOR 820, 5%, 1/8W	1010808214
R10	RESISTOR 27K, 5%, 1/8W	1010802739
R11	RESISTOR 2.7K, 5%, 1/8W	1010802721
R12	RESISTOR 5.6K, 5%, 1/8W	1010805622
R13	RESISTOR 330, 5%, 1/8W	1010803310
R14	RESISTOR 47, 5%, 1/8W	1010804707
R15	RESISTOR 5.6K, 5%, 1/8W	1010805622
R16	RESISTOR 3.3K, 5%, 1/8W	1010803328
R17	RESISTOR 1.8K, 5%, 1/8W	1010801821
R18	RESISTOR 1.8K, 5%, 1/8W	1010801821
R19	RESISTOR 560, 5%, 1/8W	1010805614
R20	RESISTOR 33, 5%, 1/8W	1010803301
R21	RESISTOR 560, 5%, 1/8W	1010805614
R22	RESISTOR 150, 5%, 1/8W	1010801511
R23	RESISTOR 560, 5%, 1/8W	1010805614
R24	RESISTOR 560, 5%, 1/8W	1010805614
R25	RESISTOR 33, 5%, 1/8W	1010803301
R26	RESISTOR 33, 5%, 1/8W	1010803301
R27	RESISTOR 560, 5%, 1/8W	1010805614
R28	RESISTOR 270, 5%, 1/8W	1010802712
R29	RESISTOR 18, 5%, 1/8W	1010801805
R30	RESISTOR 270, 5%, 1/8W	1010802712
R31	RESISTOR 10, 5%, 1/8W	1010801007
R32	RESISTOR 5.6K, 5%, 1/8W	1010805622
R33	RESISTOR 270, 5%, 1/8W	1010802712
R34	RESISTOR 18, 5%, 1/8W	1010801805
R35	RESISTOR 560, 5%, 1/8W	1010805614
R36	RESISTOR 150, 5%, 1/8W	1010801511
R37	RESISTOR 68, 5%, 1/8W	1010806807
R38	RESISTOR 270, 5%, 1/8W	1010802712
R39	RESISTOR 270, 5%, 1/8W	1010802712
R40	RESISTOR 68, 5%, 1/8W	1010806807
R41	RESISTOR 10K, 5%, 1/8W	1010801031
R42	RESISTOR 10K, 5%, 1/8W	1010801031
R43	RESISTOR 10K, 5%, 1/8W	1010801031
T1	TRANSFORMER, RF, 4:1	1010860003
T2	TRANSFORMER, RF, 4:1	1010860003
T3	TRANSFORMER, RF, 4:1	1010860003
U1	IC. DIGITAL 74LS192	1010770012
U2	IC. LINEAR CA3096	1005860033
U3	IC. DIGITAL 74LS00	1005500029
U4	IC. DIGITAL 74LS74A	1003323600
U5	IC.DIGITAL SP8793	1007090031
U6	IC. LINEAR MWA130	1010380036
U7	IC LINEAR MAR-4	1010900005
Y1	CRYSTAL, 40 MHZ HC-18/U	1007100036
	MOUNTING PAD, TRANSISTOR	0502710004

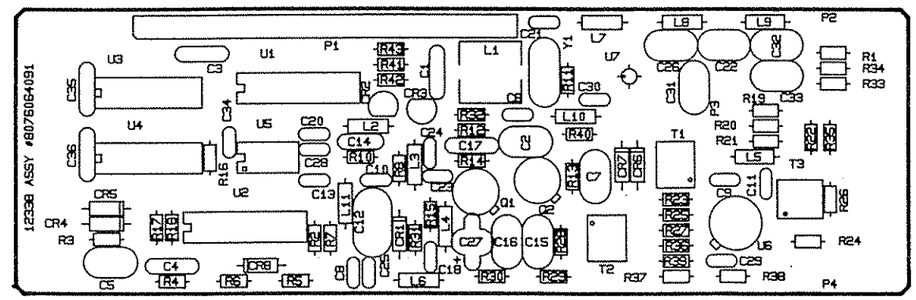

Figure 5.8.11 PC Assembly, Reference Loop and Doubler 1A2A2A4, page 1/2.

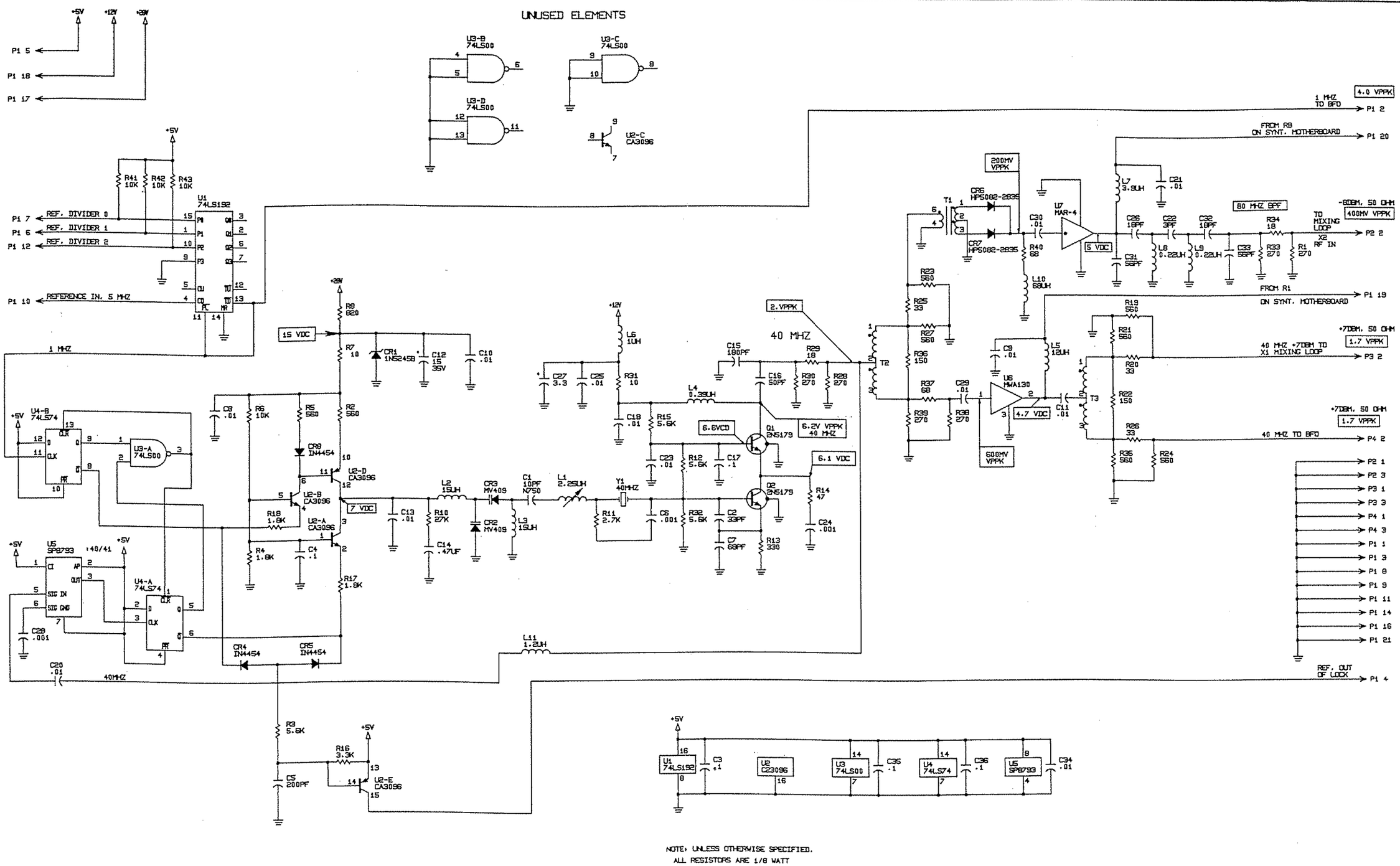

NOTE: UNLESS OTHERWISE SPECIFIED, ALL RESISTORS ARE 1/8 WATT

Figure 5.8.11 PC Assembly, Reference Loop and Doubler 1A2A2A4, page 2/2.

PC ASSY., AUDIO 1A2A3

	PC ASSY., AUDIO 1A2A3	8103090093
C1	CAP. 1UF, 35V, 196D	0281660000
C2	CAP. .01UF, 50V, X7R 20%	0281730008
C3	CAP. 1UF, 35V, 196D	0281660000
C4	CAP. .01UF, 50V, X7R 20%	0281730008
C5	CAP. 1UF, 35V, 196D	0281660000
C6	CAPACITOR 0.1UF, 50V, X7R	1011180014
C7	CAP. .01UF, 50V, X7R 20%	0281730008
C8	CAP. .01UF, 50V, X7R 20%	0281730008
C9	CAP. 22UF, 15V, T368	0296660001
C10	CAP. .47UF, 50V, X7R 20%	0283377771
C11	CAP. 1UF, 35V, 196D	0281660000
C12	CAP. 22UF, 15V, T368	0296660001
C13	CAP. 3.3UF, 35V, 196D	0281680001
C14	CAP. 1UF, 35V, 196D	0281660000
C15	CAP. 2.2UF, 35V, T368	0273950002
C16	CAP. 6.8UF, 20V, T368	0296780006
C17	CAP. 6.8UF, 20V, T368	0296780006
C18	CAP. 1UF, 35V, T368	0283630001
C19	CAP. 1UF, 35V, 196D	0281660000
C20	CAP. 2.2UF, 35V, T368	0273950002
C21	CAP. 1UF, 35V, 196D	0281660000
C22	CAPACITOR 0.1UF, 50V, X7R	1011180014
C23	CAP. 1UF, 35V, 196D	0281660000
C24	CAP. 22UF, 15V, T368	0296660001
C25	CAPACITOR 0.1UF, 50V, X7R	1011180014
C26	CAPACITOR 0.1UF, 50V, X7R	1011180014
C27	CAP. .01UF, 50V, X7R 20%	0281730008
C28	CAP. 1UF, 35V, 196D	0281660000
C29	CAP. 0.0068UF, 100V, NPO, 5%	1011450020
C30	CAP. 0.0068UF, 100V, NPO, 5%	1011450020
C31	CAP. 22UF, 15V, T368	0296660001
C32	CAP. 150PF, 500V, DM15, 5%	0274980002
C33	CAP. 1UF, 35V, 196D	0281660000
C34	CAP. .01UF, 50V, X7R 20%	0281730008
C35	CAP. 1UF, 35V, 196D	0281660000
C36	CAP. 1UF, 35V, 196D	0281660000
C37	CAP. 1UF, 35V, 196D	0281660000
C38	CAP. .01UF, 50V, X7R 20%	0281730008
C39	CAP. 1UF, 35V, 196D	0281660000
C40	CAP. 1UF, 35V, 196D	0281660000
C41	CAP. .47UF, 50V, X7R 20%	0283377771
C42	CAP. 1UF, 35V, 196D	0281660000
C43	CAP. 1UF, 35V, 196D	0281660000
C44	CAP. 22UF, 15V, T368	0296660001
C45	CAP. 150PF, 500V, DM15, 5%	0274980002
C46	CAP. 1UF, 35V, 196D	0281660000
C47	CAP. 2.2UF, 35V, T368	0273950002
C48	CAP. 6.8UF, 20V, T368	0296780006
C49	CAP. 6.8UF, 20V, T368	0296780006
C50	CAP. 1UF, 35V, 196D	0281660000
C51	CAP. 1UF, 35V, 196D	0281660000
C52	CAP. 2.2UF, 35V, T368	0273950002
C53	CAPACITOR 0.1UF, 50V, X7R	1011180014
C54	CAPACITOR 0.1UF, 50V, X7R	1011180014
C55	CAPACITOR 0.1UF, 50V, X7R	1011180014
C56	CAPACITOR 0.1UF, 50V, X7R	1011180014
C57	CAPACITOR 0.1UF, 50V, X7R	1011180014
C58	CAPACITOR 0.1UF, 50V, X7R	1011180014
C59	CAPACITOR 0.1UF, 50V, X7R	1011180014
C60	CAPACITOR 0.1UF, 50V, X7R	1011180014
C62	CAP. 1UF, 35V, 196D	0281660000
C63	CAP. 1UF, 35V, 196D	0281660000
C64	CAP. 1UF, 35V, 196D	0281660000
C65	CAP. 6.8UF, 20V, T368	0296780006
C66	CAP. .47UF, 50V, X7R 20%	0283377771
C67	CAP. 6.8UF, 20V, T368	0296780006
C68	CAP. 6.8UF, 20V, T368	0296780006
C69	CAP. 22UF, 15V, T368	0296660001
C70	CAP. 22UF, 15V, T368	0296660001
C71	CAP. 22UF, 15V, T368	0296660001
C72	CAP. 6.8UF, 20V, T368	0296780006
C73	CAP. .01UF, 50V, X7R 20%	0281730008
C74	CAP. .01UF, 50V, X7R 20%	0281730008
C75	CAP. .01UF, 50V, X7R 20%	0281730008
C76	CAP. .01UF, 50V, X7R 20%	0281730008
C77	CAP. 1UF, 35V, 196D	0281660000
C78	CAP. 1UF, 35V, 196D	0281660000
C79	CAPACITOR 0.1UF, 50V, X7R	1011180014
C80	CAP. .01UF, 50V, X7R 20%	0281730008
C81	CAPACITOR 0.1UF, 50V, X7R	1011180014
C82	CAPACITOR 0.1UF, 50V, X7R	1011180014
C83	CAPACITOR 0.1UF, 50V, X7R	1011180014
C84	CAPACITOR 0.1UF, 50V, X7R	1011180014
C85	CAPACITOR 0.1UF, 50V, X7R	1011180014
C86	CAPACITOR 0.1UF, 50V, X7R	1011180014
C87	CAPACITOR 0.1UF, 50V, X7R	1011180014
C88	CAPACITOR 0.1UF, 50V, X7R	1011180014
C89	CAP. .01UF, 50V, X7R 20%	0281730008
C90	CAPACITOR 0.1UF, 50V, X7R	1011180014
C91	CAPACITOR 0.1UF, 50V, X7R	1011180014
C92	CAP. .01UF, 50V, X7R 20%	0281730008
C93	CAPACITOR 0.1UF, 50V, X7R	1011180014
C94	CAPACITOR 0.1UF, 50V, X7R	1011180014
C95	CAPACITOR 0.1UF, 50V, X7R	1011180014
C96	CAP. .01UF, 50V, X7R 20%	0281730008
C97	CAP. .01UF, 50V, X7R 20%	0281730008
C98	CAPACITOR 0.1UF, 50V, X7R	1011180014
C99	CAPACITOR 0.1UF, 50V, X7R	1011180014
C100	CAP. .01UF, 50V, X7R 20%	0281730008
C101	CAP. .01UF, 50V, X7R 20%	0281730008
C102	CAP. .01UF, 50V, X7R 20%	0281730008
C103	CAP. .01UF, 50V, X7R 20%	0281730008
C104	CAPACITOR 0.1UF, 50V, X7R	1011180014
C105	CAP. .01UF, 50V, X7R 20%	0281730008
C106	CAP. .01UF, 50V, X7R 20%	0281730008
C107	CAP. .01UF, 50V, X7R 20%	0281730008
C108	CAP. .01UF, 50V, X7R 20%	0281730008
C109	CAP. 3.3UF, 35V, 196D	0281680001
C110	CAP. .02UF, 25V, Y5U/Y5P	0269130004
C111	CAP. 0.001UF, 100V, X7R, 20%	0281630003
C112	CAP. .01UF, 50V, X7R 20%	0281730008
C113	CAP. .01UF, 50V, X7R 20%	0281730008
CR1	DIODE, RECTIFIER 1N4004	0405180004
CR2	DIODE, RECTIFIER 1N4004	0405180004
CR3	DIODE, RECTIFIER 1N4004	0405180004
CR4	DIODE, RECTIFIER 1N4004	0405180004
CR5	DIODE, SIGNAL, SIL. 1N4454	0405270003
CR6	DIODE, RECTIFIER 1N4004	0405180004
CR7	DIODE, SIGNAL, SIL. 1N4454	0405270003
CR8	DIODE, SIGNAL, SIL. 1N4454	0405270003
CR9	DIODE, SIGNAL, SIL. 1N4454	0405270003
CR10	DIODE, RECTIFIER 1N4004	0405180004
CR11	DIODE, RECTIFIER 1N4004	0405180004
CR12	DIODE, RECTIFIER 1N4004	0405180004
CR13	DIODE, RECTIFIER 1N4004	0405180004
CR14	DIODE, SIGNAL, SIL. 1N4454	0405270003
CR15	DIODE, LED, RED, PC MOUNT	1008480029
CR16	DIODE, RECTIFIER 1N4004	0405180004
CR17	DIODE, SIGNAL, SIL. 1N4454	0405270003
CR18	DIODE, SIGNAL, SIL. 1N4454	0405270003
CR19	DIODE, ZENER 1N5233	0405580002
CR20	DIODE, ZENER 1N5233	0405580002
J1	SOCKET, BOARDMOUNT, 12 PIN	1011010127
K1	RELAY, DPDT, 12VDC	1005090009
K2	RELAY, DPDT, 12VDC	1005090009
Q1	TRANSISTOR, NPN, SI. 2N4124	0448010003
Q2	TRANSISTOR, P-CH, FET J175	1010840002
Q3	TRANSISTOR, N-CH, FET MTP10N06	1010750011
R1	RESISTOR 100, 5%, 1/8W	1010801015
R2	POT. 500, 10% 3/4W, 15 TURNS	0338490078
R3	RESISTOR 10K, 5%, 1/8W	1010801031
R4	RESISTOR 10K, 5%, 1/8W	1010801031
R5	RESISTOR 10K, 5%, 1/8W	1010801031
R6	RESISTOR 10K, 5%, 1/8W	1010801031
R7	RESISTOR 10K, 5%, 1/8W	1010801031
R8	RESISTOR 10K, 5%, 1/8W	1010801031
R9	RESISTOR 10K, 5%, 1/8W	1010801031
R10	RESISTOR 10K, 5%, 1/8W	1010801031
R11	POT. 1K, 10% 3/4W, 15 TURNS	0338490019
R12	RESISTOR 10K, 5%, 1/8W	1010801031
R13	RESISTOR 10K, 5%, 1/8W	1010801031
R14	RESISTOR 10K, 5%, 1/8W	1010801031
R15	RESISTOR 1M, 10%, 1/4W	0170650006
R16	RESISTOR 10K, 5%, 1/8W	1010801031
R17	RESISTOR 10K, 5%, 1/8W	1010801031
R18	RESISTOR 6.8K, 5%, 1/8W	1010806823
R19	RESISTOR 3.3K, 5%, 1/8W	1010803328
R20	RESISTOR 4.7K, 5%, 1/8W	1010804723
R21	RESISTOR 4.7K, 5%, 1/8W	1010804723
R22	RESISTOR 1K, 5%, 1/8W	1010801023
R23	RESISTOR, 6.8M, 5%, 1/4W	1010910001
R24	RESISTOR 10, 5%, 1/8W	1010801007
R25	RESISTOR 1M, 10%, 1/4W	0170650006
R26	RESISTOR 4.7K, 5%, 1/8W	1010804723
R27	RESISTOR 100K, 5%, 1/8W	1010801040
R28	RESISTOR 100, 5%, 1/8W	1010801015
R29	POT. 500, 10% 3/4W, 15 TURNS	0338490078
R30	RESISTOR 10K, 5%, 1/8W	1010801031
R31	RESISTOR 10K, 5%, 1/8W	1010801031
R32	RESISTOR 1K, 5%, 1/8W	1010801023
R33	RESISTOR 10K, 5%, 1/8W	1010801031
R34	RESISTOR 1.8K, 5%, 1/8W	1010801821
R35	RESISTOR 4.7K, 5%, 1/8W	1010804723

Figure 5.8.12 PC Assembly, Audio 1A2A3, page 1/8.

R36	RESISTOR 10K, 5%, 1/8W	1010801031
R37	RESISTOR 10K, 5%, 1/8W	1010801031
R38	RESISTOR 10K, 5%, 1/8W	1010801031
R39	RESISTOR 10K, 5%, 1/8W	1010801031
R40	RESISTOR 10K, 5%, 1/8W	1010801031
R41	POT. 10K, 10% 3/4W, 15 TURNS	0338490043
R42	RESISTOR 100K, 5%, 1/8W	1010801040
R43	RESISTOR 15K, 5%, 1/8W	1010801538
R44	RESISTOR 1K, 5%, 1/8W	1010801023
R45	RESISTOR 1K, 5%, 1/8W	1010801023
R46	RESISTOR 10K, 5%, 1/8W	1010801031
R47	RESISTOR 270K, 5%, 1/8W	1010802747
R48	RESISTOR 10K, 5%, 1/8W	1010801031
R49	RESISTOR 10K, 5%, 1/8W	1010801031
R50	RESISTOR 470K, 5%, 1/8W	1010804740
R51	RESISTOR 470K, 5%, 1/8W	1010804740
R52	RESISTOR 1K, 5%, 1/8W	1010801023
R54	RESISTOR 10K, 5%, 1/8W	1010801031
R55	RESISTOR 10K, 5%, 1/8W	1010801031
R56	RESISTOR 10K, 5%, 1/8W	1010801031
R57	POT. 10K, 10% 3/4W, 15 TURNS	0338490043
R58	RESISTOR 2.2K, 5%, 1/8W	1010802224
R59	RESISTOR 10K, 5%, 1/8W	1010801031
R60	RESISTOR 28.7K 1%, 1/8W	1004090005
R61	RESISTOR 10K, 5%, 1/8W	1010801031
R62	RESISTOR 10K, 5%, 1/8W	1010801031
R63	RESISTOR 10K, 5%, 1/8W	1010801031
R64	RESISTOR 28.7K 1%, 1/8W	1004090005
R65	RESISTOR, 4.99K, 1%, 1/8W	1005510032
R66	RESISTOR 390, 5%, 1/8W	1010803913
R67	RESISTOR 12.1K, 1%, 1/8W	1008900010
R68	RESISTOR, 56.2K, 1%, 1/8W	1008910015
R69	RESISTOR 1K AT 25C	0196110009
R70	RESISTOR 100, 5%, 1/8W	1010801015
R71	POT. 500, 10% 3/4W, 15 TURNS	0338490078
R72	RESISTOR 10K, 5%, 1/8W	1010801031
R73	RESISTOR 10K, 5%, 1/8W	1010801031
R74	RESISTOR 10K, 5%, 1/8W	1010801031
R75	RESISTOR 10K, 5%, 1/8W	1010801031
R76	RESISTOR 4.7K, 5%, 1/8W	1010804723
R77	RESISTOR 10K, 5%, 1/8W	1010801031
R78	RESISTOR 68K, 5%, 1/8W	1010806831
R79	RESISTOR 10K, 5%, 1/8W	1010801031
R80	RESISTOR 10K, 5%, 1/8W	1010801031
R81	RESISTOR 10K, 5%, 1/8W	1010801031
R82	RESISTOR 10K, 5%, 1/8W	1010801031
R83	POT. 1K, 10% 3/4W, 15 TURNS	0338490019
R84	RESISTOR 10K, 5%, 1/8W	1010801031
R85	RESISTOR 4.7K, 5%, 1/8W	1010804723
R86	RESISTOR 4.7K, 5%, 1/8W	1010804723
R87	RESISTOR 10K, 5%, 1/8W	1010801031
R88	RESISTOR 10K, 5%, 1/8W	1010801031
R89	RESISTOR 10K, 5%, 1/8W	1010801031
R90	RESISTOR 1K, 5%, 1/8W	1010801023
R91	RESISTOR, 6.8M, 5%, 1/4W	1010910001
R92	RESISTOR 10, 5%, 1/8W	1010801007
R93	RESISTOR 1M, 10%, 1/4W	0170650006
R94	RESISTOR 4.7K, 5%, 1/8W	1010804723

R95	RESISTOR 100K, 5%, 1/8W	1010801040
R96	RESISTOR 100, 5%, 1/8W	1010801015
R97	POT. 500, 10% 3/4W, 15 TURNS	0338490078
R98	RESISTOR 10K, 5%, 1/8W	1010801031
R99	RESISTOR 10K, 5%, 1/8W	1010801031
R100	RESISTOR 1K, 5%, 1/8W	1010801023
R101	RESISTOR 10K, 5%, 1/8W	1010801031
R102	RESISTOR 10K, 5%, 1/8W	1010801031
R103	RESISTOR 1.8K, 5%, 1/8W	1010801821
R104	RESISTOR 4.7K, 5%, 1/8W	1010804723
R105	RESISTOR 10K, 5%, 1/8W	1010801031
R106	RESISTOR 100K, 5%, 1/8W	1010801040
R107	RESISTOR 100K, 5%, 1/8W	1010801040
R108	RESISTOR 100K, 5%, 1/8W	1010801040
R109	RESISTOR 100K, 5%, 1/8W	1010801040
R110	RESISTOR 10K, 5%, 1/8W	1010801031
R111	RESISTOR 100K, 5%, 1/8W	1010801040
R112	RESISTOR 100K, 5%, 1/8W	1010801040
R113	RESISTOR 10K, 5%, 1/8W	1010801031
R114	RESISTOR 100K, 5%, 1/8W	1010801040
R115	RESISTOR 100K, 5%, 1/8W	1010801040
R116	RESISTOR 10K, 5%, 1/8W	1010801031
R117	RESISTOR 10K, 5%, 1/8W	1010801031
R118	RESISTOR 10K, 5%, 1/8W	1010801031
R119	RESISTOR 56K, 5%, 1/8W	1010805631
R120	RESISTOR 39K, 5%, 1/8W	1010803930
R121	RESISTOR 10K, 5%, 1/8W	1010801031
R122	RESISTOR 4.7K, 5%, 1/8W	1010804723
R123	RESISTOR 18K, 5%, 1/8W	1010801830
R124	RESISTOR 1K, 5%, 1/8W	1010801023
R125	RESISTOR 4.7K, 5%, 1/8W	1010804723
R126	RESISTOR 1K, 5%, 1/8W	1010801023
R127	RESISTOR 1K, 5%, 1/8W	1010801023
R128	POT. 1K, 10% 3/4W, 15 TURNS	0338490019
R129	RESISTOR 1K, 10%, 1/4W	0171560001
R130	RESISTOR 100K, 5%, 1/8W	1010801040
R131	RESISTOR 10K, 5%, 1/8W	1010801031
R132	RESISTOR 10K, 5%, 1/8W	1010801031
R133	RESISTOR 10K, 5%, 1/8W	1010801031
R134	RESISTOR 10K, 5%, 1/8W	1010801031
R135	RESISTOR 4.7K, 5%, 1/8W	1010804723
R136	RESISTOR 4.7K, 5%, 1/8W	1010804723
R137	RESISTOR 10K, 5%, 1/8W	1010801031
R138	RESISTOR 10K, 5%, 1/8W	1010801031
R139	RESISTOR 10K, 5%, 1/8W	1010801031
R140	RESISTOR 10K, 5%, 1/8W	1010801031
R142	RESISTOR 1M, 10%, 1/4W	0170650006
R143	RESISTOR 4.7K, 5%, 1/8W	1010804723
R144	RESISTOR 1M, 10%, 1/4W	0170650006
RP1	RES NTWK 6 PIN SIP 10K COM	1006130004
S1	SWITCH, DPST,DIP, 3 SECTION	1010880004
S2	SWITCH, DPST,DIP, 3 SECTION	1010880004
T1	TRANSFORMER, AUDIO, PC MOUNT	0491650001
T2	TRANSFORMER, AUDIO, PC MOUNT	0491650001
TP1	TEST POINT, RED	1011130033
TP2	TEST POINT, RED	1011130033
U1	IC. LINEAR LF-347	1007500026
U2	IC. DIGITAL 4066BC	1004460023

U3	IC.LINEAR MC3358P1	1010110012
U4	IC. LINEAR LM339N	1003970028
U5	IC.LINEAR MC3358P1	1010110012
U6	IC. LINEAR LC403	1010850008
U7	IC.LINEAR MC3358P1	1010110012
U8	IC.LINEAR MC3358P1	1010110012
U9	IC. LINEAR LF-347	1007500026
U10	IC. DIGITAL 4584B	1005190011
U11	IC. DIGITAL 4066BC	1004460023
U12	IC. LINEAR LF-347	1007500026
U13	IC.LINEAR MC3358P1	1010110012
U14	IC. DIGITAL 4066BC	1004460023
U15	IC. LINEAR LC403	1010850008
U16	IC.LINEAR MC3358P1	1010110012
U17	IC.LINEAR MC3358P1	1010110012
U18	IC. DIGITAL 4066BC	1004460023
U19	IC. DIGITAL 4584B	1005190011
U20	IC. LINEAR NE570	1011500001
U21	IC. DIGITAL 74HC14	1006490027
U22	IC. DIGITAL 74HC08	1006490019
U23	IC, DIGITAL 74HC00	1008190004
U24	IC. LINEAR UDN2935Z	1010830007
U25	IC. LINEAR UDN2935Z	1010830007
U26	IC. DIGITAL 75372	1010760017
U27	IC. DIGITAL 4066BC	1004460023
U28	IC.LINEAR MC3358P1	1010110012
	INSULATOR, MICA TO-220AB	0448670003
	MOUNTING PLATE, AUDIO BOARD	8076091608
	NUT, HEX 4-40 X 3/16 AF	0501880003
	PCB. AUDIO, EXCITER	8103090204
	SCREW, PH 4-40 X 5/16 LG.	0500850054
	WASHER, SPLIT #4	0500020001
	WASHER, FLAT #4 .219 OD	0502560002

Figure 5.8.12 PC Assembly, Audio 1A2A3, page 2/8.

TOP VIEW

S2-1 MIC COMPRESSOR ON OR OFF
S2-2 XMIT SQUELCH ON OR OFF
S2-3 LINE AUDIO COMPRESSOR ON OR OFF

NORMAL SETTINGS FOR S2-1 THROUGH 3 SHOWN

TOP VIEW

S1-1 MIC COMPRESSOR ON OR OFF
S1-2 XMIT SQUELCH ON OR OFF
S1-3 LINE AUDIO COMPRESSOR ON OR OFF

NORMAL SETTINGS FOR S1-1 THROUGH 3 SHOWN

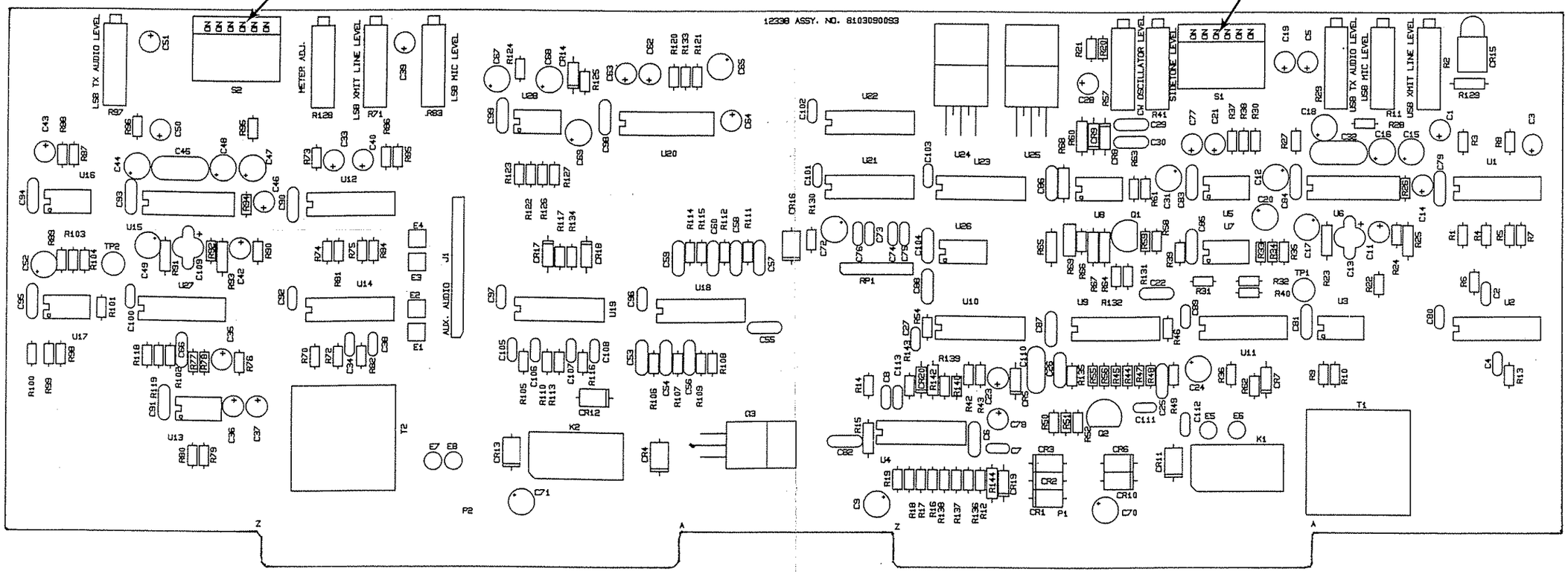

Figure 5.8.12 PC Assembly, Audio 1A2A3, page 3/8.

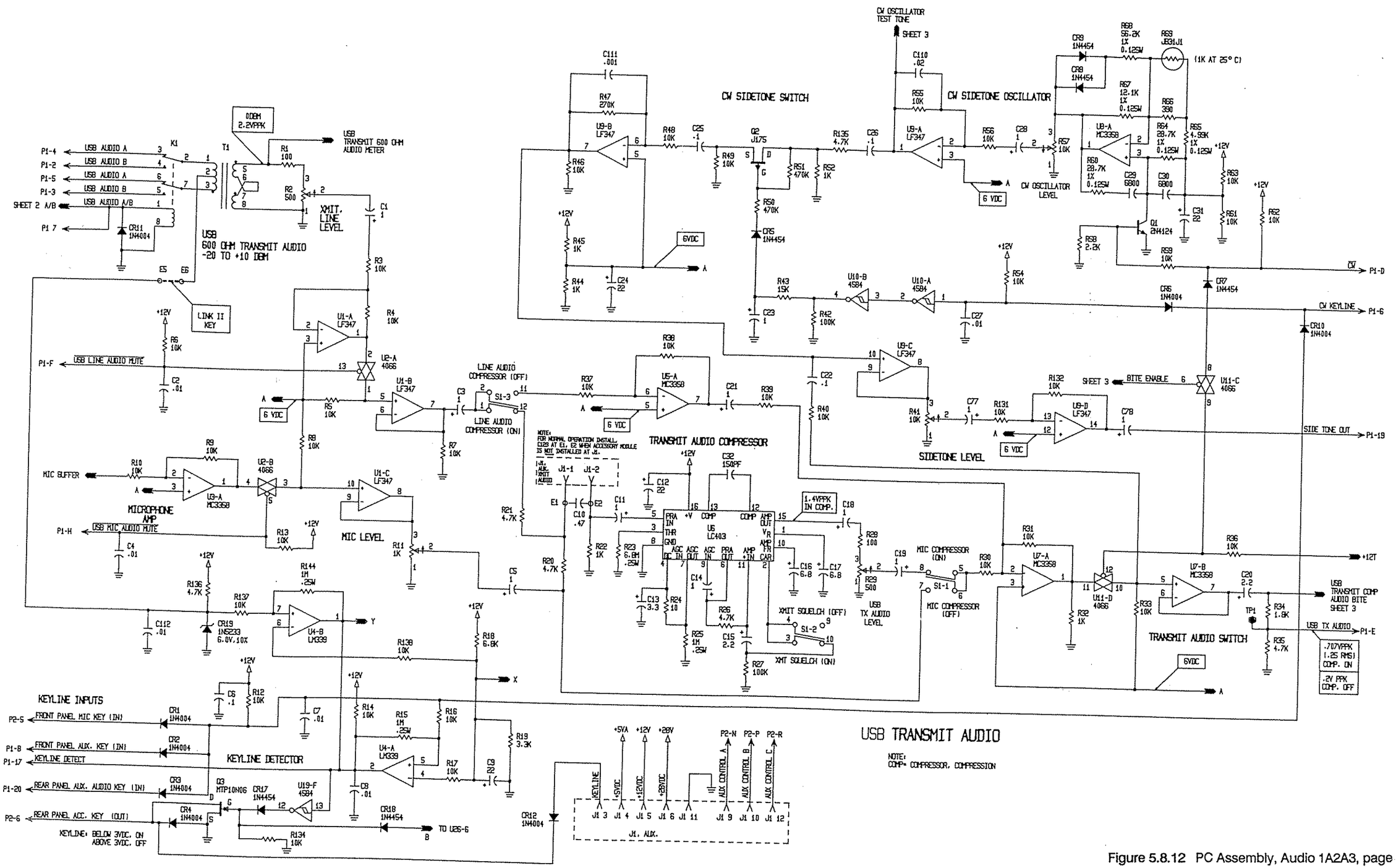

Figure 5.8.12 PC Assembly, Audio 1A2A3, page 4/8.

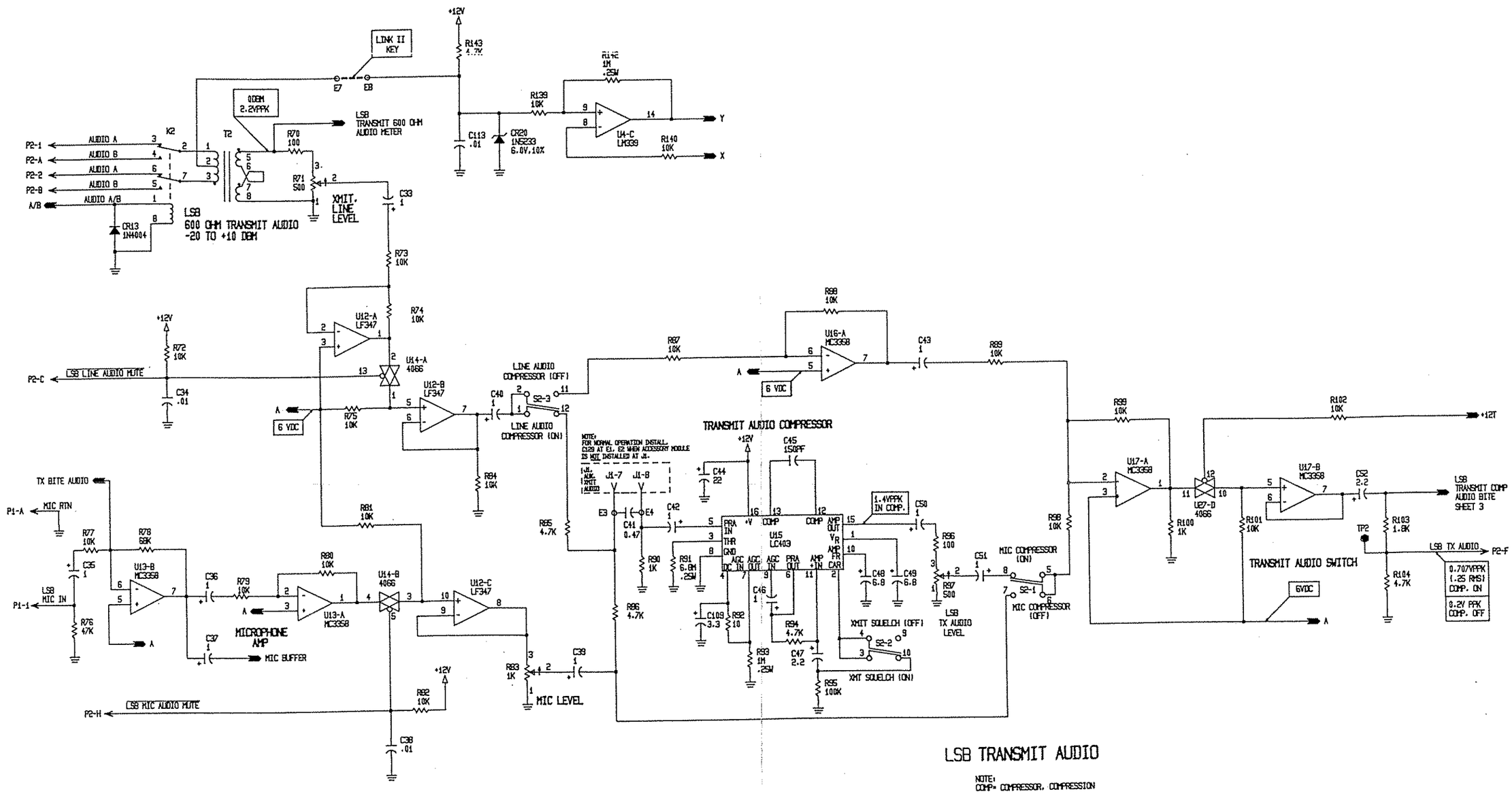

Figure 5.8.12 PC Assembly, Audio 1A2A3, page 5/8.

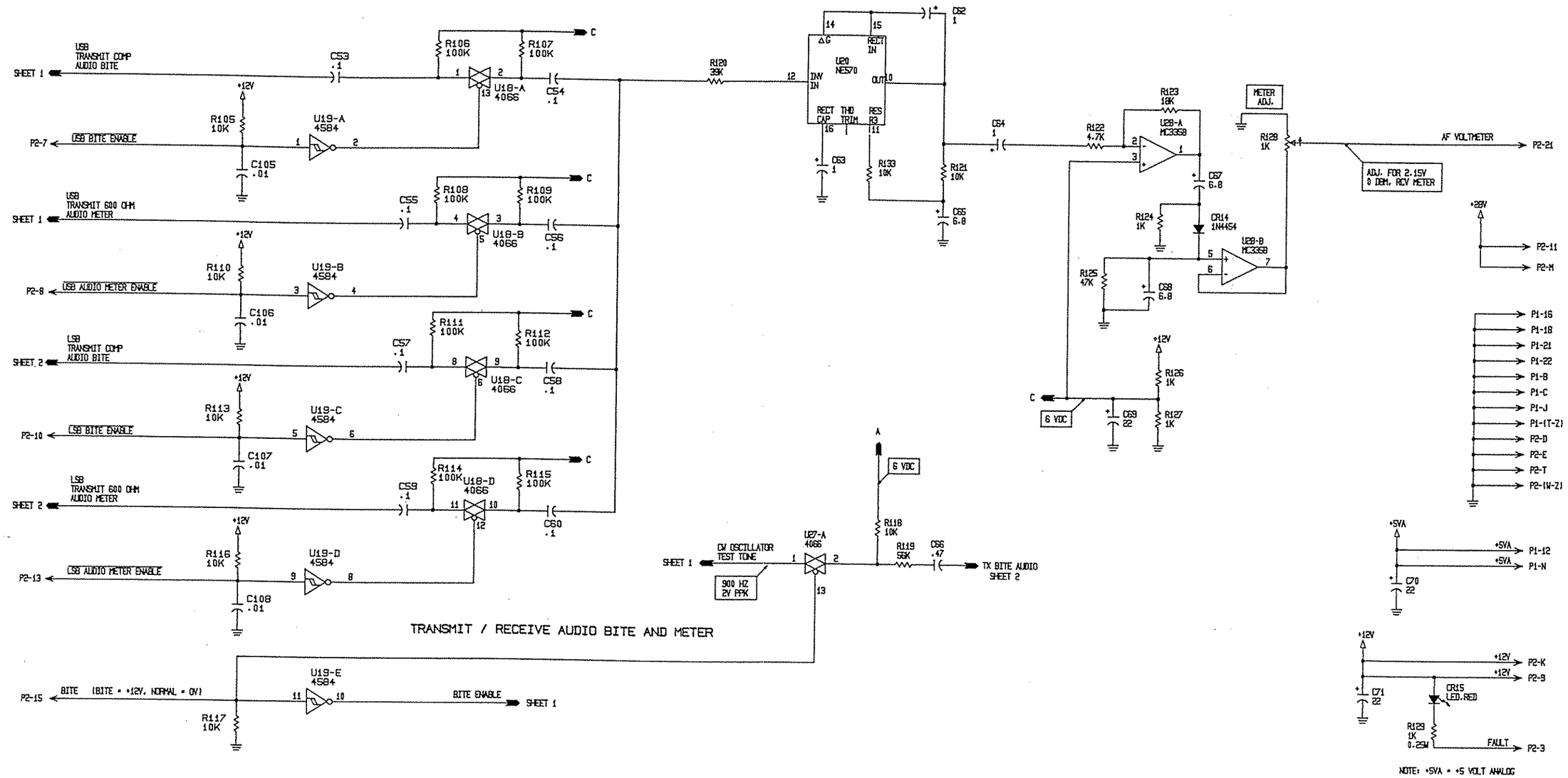

Figure 5.8.12 PC Assembly, Audio 1A2A3, page 6/8.

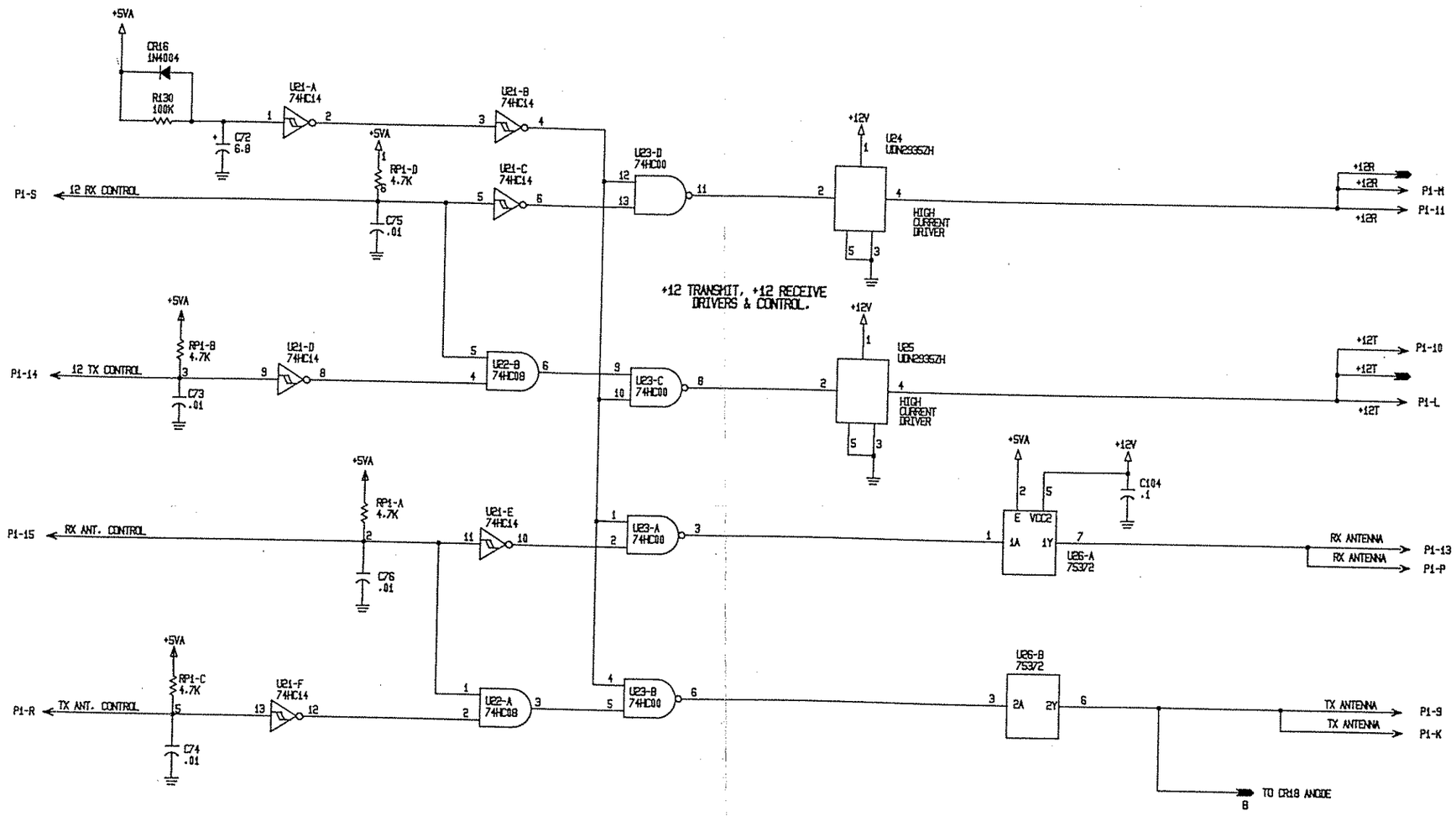

Figure 5.8.12 PC Assembly, Audio 1A2A3, page 7/8.

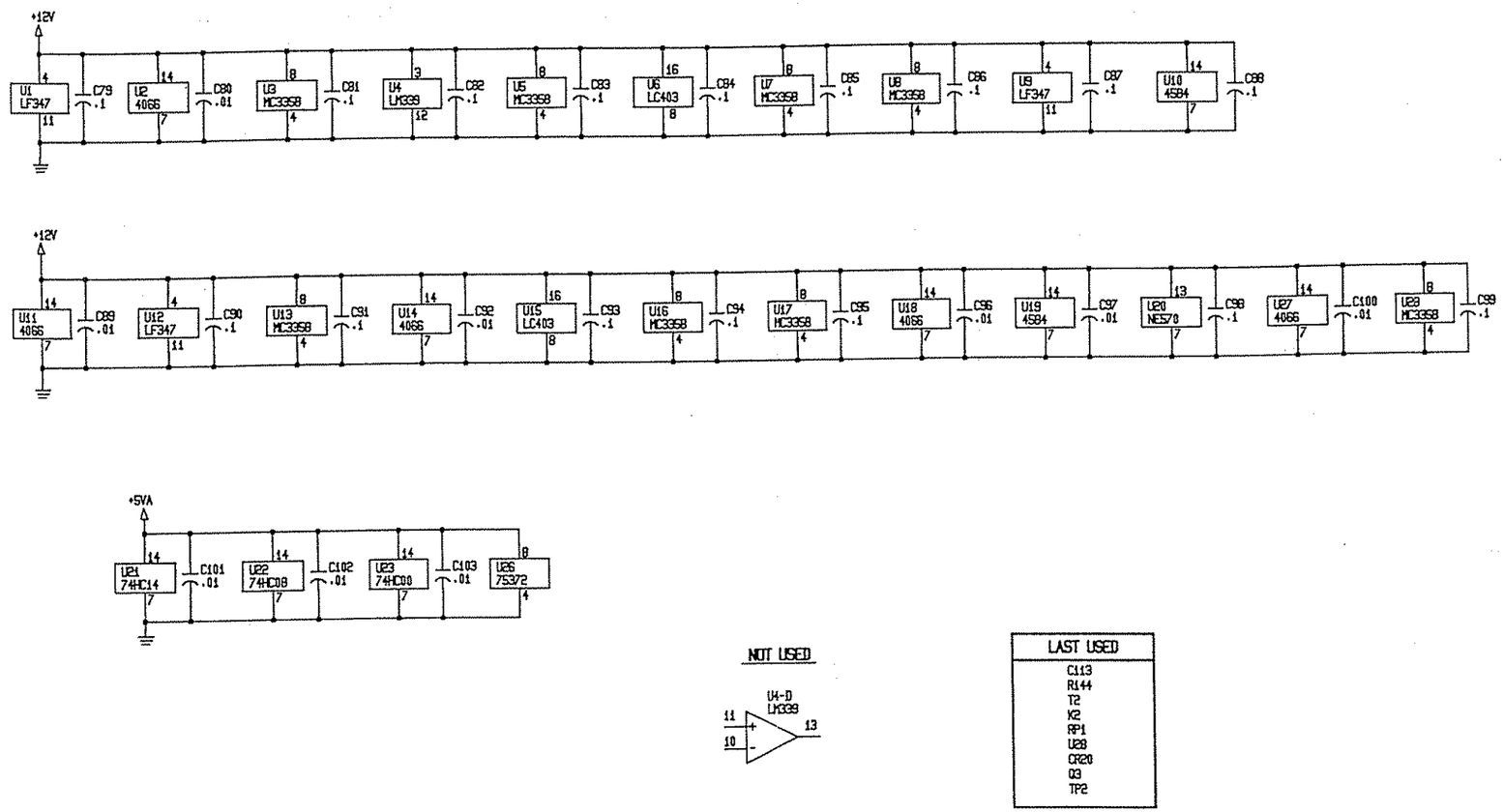

Figure 5.8.12 PC Assembly, Audio 1A2A3, page 8/8.

PC ASSY., IF 1A2A4

	PC ASSY., IF 1A2A4	8103080098
C1	CAPACITOR 0.1UF, 50V, X7R	1011180014
C3	CAP. 22UF, 15V, T368	0296660001
C4	CAPACITOR 0.1UF, 50V, X7R	1011180014
C5	CAPACITOR 0.1UF, 50V, X7R	1011180014
C6	CAPACITOR 0.1UF, 50V, X7R	1011180014
C7	CAP. .01UF, 50V, X7R 20%	0281730008
C8	CAP. .01UF, 50V, X7R 20%	0281730008
C9	CAP. 6.8UF, 20V, T368	0296780006
C10	CAP. 15UF, 15V, 196D	0281720002
C11	CAP. 15UF, 15V, 196D	0281720002
C12	CAPACITOR 0.1UF, 50V, X7R	1011180014
C13	CAPACITOR 0.1UF, 50V, X7R	1011180014
C15	CAPACITOR 0.1UF, 50V, X7R	1011180014
C16	CAP. 6.8UF, 20V, T368	0296780006
C17	CAP. 15UF, 15V, 196D	0281720002
C18	CAP. 15UF, 15V, 196D	0281720002
C19	CAPACITOR 0.1UF, 50V, X7R	1011180014
C20	CAPACITOR 0.1UF, 50V, X7R	1011180014
C22	CAP. .01UF, 50V, X7R 20%	0281730008
C23	CAP. .01UF, 50V, X7R 20%	0281730008
C24	CAP. 110PF, 500V, DM10, 5%	0257750002
C25	CAP. .01UF, 50V, X7R 20%	0281730008
C26	CAPACITOR 0.1UF, 50V, X7R	1011180014
C27	CAP. 1UF, 35V, 196D	0281660000
C29	CAP. 10PF, 500V, DM10	0259830003
C30	CAP. 10PF, 500V, DM10	0259830003
C28	CAP. .01UF, 50V, X7R 20%	0281730008
C32	CAPACITOR 0.1UF, 50V, X7R	1011180014
C33	CAP. 1UF, 35V, 196D	0281660000
C34	CAP. .01UF, 50V, X7R 20%	0281730008
C35	CAP. 10PF, 500V, DM10	0259830003
C36	CAP. 10PF, 500V, DM10	0259830003
C37	CAP. .01UF, 50V, X7R 20%	0281730008
C38	CAP. 110PF, 500V, DM10, 5%	0257750002
C39	CAP. .01UF, 50V, X7R 20%	0281730008
C40	CAP. .01UF, 50V, X7R 20%	0281730008
C41	CAPACITOR 0.1UF, 50V, X7R	1011180014
C42	CAP. 15UF, 35V	0282240004
C43	CAPACITOR 0.1UF, 50V, X7R	1011180014
C44	CAP. 22UF, 15V, T368	0296660001
C45	CAPACITOR 0.1UF, 50V, X7R	1011180014
C46	CAP. 22UF, 15V, T368	0296660001
C47	CAPACITOR 0.1UF, 50V, X7R	1011180014
C49	CAPACITOR 0.1UF, 50V, X7R	1011180014
C50	CAP. 15UF, 35V	0282240004
C51	CAP. .01UF, 50V, X7R 20%	0281730008
C52	CAP. 110PF, 500V, DM10, 5%	0257750002
C53	CAP. 10PF, 500V, DM10	0259830003
C54	CAP. .01UF, 50V, X7R 20%	0281730008
C55	CAPACITOR 0.1UF, 50V, X7R	1011180014
C56	CAP. 1UF, 35V, 196D	0281660000
C57	CAP. 10PF, 500V, DM10	0259830003
C58	CAP. .01UF, 50V, X7R 20%	0281730008
C59	CAP. 10PF, 500V, DM10	0259830003
C60	CAP. .01UF, 50V, X7R 20%	0281730008
C61	CAPACITOR 0.1UF, 50V, X7R	1011180014
C62	CAP. 1UF, 35V, 196D	0281660000

C63	CAP. 10PF, 500V, DM10	0259830003
C64	CAP. .01UF, 50V, X7R 20%	0281730008
C65	CAP. 110PF, 500V, DM10, 5%	0257750002
C66	CAP. 0.001UF, 100V, X7R, 20%	0281630003
C67	CAP. 0.001UF, 100V, X7R, 20%	0281630003
C68	CAPACITOR 0.1UF, 50V, X7R	1011180014
C69	CAP. 6.8UF, 20V, T368	0296780006
C70	CAPACITOR 0.1UF, 50V, X7R	1011180014
C71	CAP. 6.8UF, 20V, T368	0296780006
C72	CAP. 0.001UF, 100V, X7R, 20%	0281630003
C73	CAP. .01UF, 50V, X7R 20%	0281730008
C74	CAPACITOR 0.1UF, 50V, X7R	1011180014
C75	CAP. .01UF, 50V, X7R 20%	0281730008
C76	CAPACITOR 0.1UF, 50V, X7R	1011180014
C77	CAP. .01UF, 50V, X7R 20%	0281730008
C78	CAP. 91PF, 500V, DM10, 5%	0284420000
C79	CAP. 150PF, 500V, DM10, 5%	0293430004
C80	CAP. 82PF, 500V, DM10, 5%	0262120003
C81	CAP. .01UF, 50V, X7R 20%	0281730008
C82	CAP. .01UF, 50V, X7R 20%	0281730008
C83	CAPACITOR 0.1UF, 50V, X7R	1011180014
C84	CAP. .01UF, 50V, X7R 20%	0281730008
C85	CAPACITOR 0.1UF, 50V, X7R	1011180014
C86	CAP. .01UF, 50V, X7R 20%	0281730008
C87	CAP. .01UF, 50V, X7R 20%	0281730008
C88	CAP. .01UF, 50V, X7R 20%	0281730008
C89	CAP. 0.001UF, 100V, X7R, 20%	0281630003
C90	CAP. 0.001UF, 100V, X7R, 20%	0281630003
C91	CAP. 0.001UF, 100V, X7R, 20%	0281630003
C92	CAP. .01UF, 50V, X7R 20%	0281730008
C93	CAP. 0.001UF, 100V, X7R, 20%	0281630003
C94	CAP. .01UF, 50V, X7R 20%	0281730008
C95	CAP. .01UF, 50V, X7R 20%	0281730008
C96	CAP. .01UF, 50V, X7R 20%	0281730008
C97	CAP. .01UF, 50V, X7R 20%	0281730008
C98	CAP. 0.001UF, 100V, X7R, 20%	0281630003
C99	CAP. 0.001UF, 100V, X7R, 20%	0281630003
C100	CAP. 0.001UF, 100V, X7R, 20%	0281630003
C101	CAP. .01UF, 50V, X7R 20%	0281730008
C102	CAP. 0.001UF, 100V, X7R, 20%	0281630003
C103	CAP. .01UF, 50V, X7R 20%	0281730008
C104	CAP. .01UF, 50V, X7R 20%	0281730008
C105	CAP. .01UF, 50V, X7R 20%	0281730008
C106	CAP. 0.001UF, 100V, X7R, 20%	0281630003
C107	CAP. .01UF, 50V, X7R 20%	0281730008
C108	CAP. 15PF, 500V, DM10, 5%	0259950009
C109	CAP. 15PF, 500V, DM10, 5%	0259950009
C110	CAP. .01UF, 50V, X7R 20%	0281730008
C111	CAP. .01UF, 50V, X7R 20%	0281730008
C112	CAP. 2.2UF, 35V, T368	0273950002
C113	CAP. 10UF, 20V	1007290005
C114	CAP. .01UF, 50V, X7R 20%	0281730008
C115	CAP. .01UF, 50V, X7R 20%	0281730008
C116	CAP. .01UF, 50V, X7R 20%	0281730008
C117	CAP. 2.2UF, 35V, T368	0273950002
C118	CAP. 22UF, 15V, T368	0296660001
C119	CAP. 6.8UF, 20V, T368	0296780006
C120	CAP. 0.001UF, 100V, X7R, 20%	0281630003

C121	CAP. 0.001UF, 100V, X7R, 20%	0281630003
C122	CAPACITOR 0.1UF, 50V, X7R	1011180014
C123	CAP. 0.001UF, 100V, X7R, 20%	0281630003
C124	CAP. 0.001UF, 100V, X7R, 20%	0281630003
C125	CAPACITOR 0.1UF, 50V, X7R	1011180014
C126	CAP. 110PF, 500V, DM10, 5%	0257750002
C127	CAP. 180PF, 500V, DM10, 5%	0294100008
C128	CAP. 110PF, 500V, DM10, 5%	0257750002
C129	CAP. .01UF, 50V, X7R 20%	0281730008
C130	CAP. 220PF, 500V, DM10, 2%	1010870009
C131	CAP. .01UF, 50V, X7R 20%	0281730008
C132	CAP. 220PF, 500V, DM10, 2%	1010870009
C133	CAP. .01UF, 50V, X7R 20%	0281730008
C134	CAP. .01UF, 50V, X7R 20%	0281730008
C135	CAPACITOR 0.1UF, 50V, X7R	1011180014
C136	CAP. 2.2UF, 35V, T368	0273950002
C137	CAPACITOR 0.1UF, 50V, X7R	1011180014
C138	CAPACITOR 0.1UF, 50V, X7R	1011180014
C139	CAPACITOR 0.1UF, 50V, X7R	1011180014
C140	CAP. .01UF, 50V, X7R 20%	0281730008
C141	CAPACITOR 0.1UF, 50V, X7R	1011180014
C142	CAPACITOR 0.1UF, 50V, X7R	1011180014
C143	CAPACITOR 0.1UF, 50V, X7R	1011180014
C144	CAPACITOR 0.1UF, 50V, X7R	1011180014
C145	CAPACITOR 0.1UF, 50V, X7R	1011180014
C146	CAPACITOR 0.1UF, 50V, X7R	1011180014
C147	CAPACITOR 0.1UF, 50V, X7R	1011180014
C148	CAPACITOR 0.1UF, 50V, X7R	1011180014
C150	CAP. 0.001UF, 100V, X7R, 20%	0281630003
C151	CAP. 0.001UF, 100V, X7R, 20%	0281630003
C152	CAP. .01UF, 50V, X7R 20%	0281730008
C153	CAPACITOR 0.1UF, 50V, X7R	1011180014
C154	CAP. .01UF, 50V, X7R 20%	0281730008
C155	CAP. .01UF, 50V, X7R 20%	0281730008
C156	CAPACITOR 0.1UF, 50V, X7R	1011180014
C157	CAPACITOR 0.1UF, 50V, X7R	1011180014
C158	CAPACITOR 0.1UF, 50V, X7R	1011180014
C159	CAP. .01UF, 50V, X7R 20%	0281730008
C160	CAP. 1UF, 35V, 196D	0281660000
C161	CAP. 1UF, 35V, 196D	0281660000
C162	CAP. 47UF, 35V	0282190007
C163	CAP. 47UF, 35V	0282190007
C164	CAP. 10UF, 20V	1007290005
C165	CAP. .47UF, 50V, X7R 20%	0283377771
CR1	DIODE, SIGNAL, SIL. 1N4454	0405270003
CR2	DIODE, SIGNAL, SIL. 1N4454	0405270003
CR3	DIODE, PIN 1N5767	0405570007
CR4	DIODE, PIN 1N5767	0405570007
CR5	DIODE, PIN 1N5767	0405570007
CR6	DIODE, PIN 1N5767	0405570007
CR7	DIODE, PIN 1N5767	0405570007
CR8	DIODE, PIN 1N5767	0405570007
CR9	DIODE, LED, RED, PC MOUNT	1008480029
CR10	DIODE, PIN 1N5767	0405570007
CR11	DIODE, PIN 1N5767	0405570007
CR12	DIODE, PIN 1N5767	0405570007
CR13	DIODE, PIN 1N5767	0405570007
CR14	DIODE, PIN 1N5767	0405570007

Figure 5.8.13 PC Assembly, IF 1A2A4, page 1/10.

CR15	DIODE, PIN 1N5767	0405570007
CR16	DIODE, PIN 1N5767	0405570007
CR17	DIODE, PIN 1N5767	0405570007
CR18	DIODE, PIN 1N5767	0405570007
CR19	DIODE, PIN 1N5767	0405570007
CR20	DIODE, PIN 1N5767	0405570007
CR21	DIODE, PIN 1N5767	0405570007
CR22	DIODE, SIGNAL, SIL 1N4454	0405270003
CR23	DIODE, SIGNAL, SIL 1N4454	0405270003
CR24	DIODE, HOT CARRIER 1N6263	0405610009
CR25	DIODE, HOT CARRIER 1N6263	0405610009
CR26	DIODE, HOT CARRIER 1N6263	0405610009
CR27	DIODE, HOT CARRIER 1N6263	0405610009
CR28	DIODE, HOT CARRIER 1N6263	0405610009
CR29	DIODE, HOT CARRIER 1N6263	0405610009
CR30	DIODE, HOT CARRIER 1N6263	0405610009
CR32	DIODE, HOT CARRIER 1N6263	0405610009
CR33	DIODE, PIN 1N5767	0405570007
CR34	DIODE, PIN 1N5767	0405570007
CR35	DIODE, PIN 1N5767	0405570007
CR36	DIODE, SIGNAL, SIL 1N4454	0405270003
CR37	DIODE, SIGNAL, SIL 1N4454	0405270003
CR38	DIODE, PIN 1N5767	0405570007
CR39	DIODE, PIN 1N5767	0405570007
CR40	DIODE, SIGNAL, SIL 1N4454	0405270003
CR41	DIODE, SIGNAL, SIL 1N4454	0405270003
CR42	DIODE, SIGNAL, SIL 1N4454	0405270003
CR43	DIODE, SIGNAL, SIL 1N4454	0405270003
FL1	FILTER, LSB (USB OPERATION)	8076082501
FL3	FILTER, USB (LSB OPERATION)	8076083303
FL5	FILTER,CRYSTAL 48.305 MHZ	1010430017
L1	INDUCTOR, MOLDED, 1000UH, 10%	0664940005
L2	INDUCTOR, MOLDED, 1000UH, 10%	0664940005
L3	INDUCTOR, MOLDED, 1000UH, 10%	0664940005
L4	INDUCTOR, MOLDED, 1000UH, 10%	0664940005
L5	INDUCTOR, MOLDED, 47UH, 5%	0646420003
L6	INDUCTOR, MOLDED, 150UH, 5%	0659190001
L7	INDUCTOR, MOLDED, 150UH, 5%	0659190001
L8	INDUCTOR, MOLDED, 8.2UH, 5%	0652060005
L9	INDUCTOR, MOLDED, 8.2UH, 5%	0652060005
L10	INDUCTOR, MOLDED, 8.2UH, 5%	0652060005
L11	INDUCTOR, MOLDED, 8.2UH, 5%	0652060005
L12	INDUCTOR, MOLDED, 0.18UH, 5%	0648740005
L13	INDUCTOR, MOLDED, 0.18UH, 5%	0648740005
L14	INDUCTOR, MOLDED, 8.2UH, 5%	0652060005
L15	INDUCTOR, MOLDED, 0.68UH, 5%	0649030001
L16	INDUCTOR, MOLDED, 0.68UH, 5%	0649030001
L17	INDUCTOR, MOLDED, 8.2UH, 5%	0652060005
L18	INDUCTOR, MOLDED, 8.2UH, 5%	0652060005
L19	INDUCTOR, MOLDED, 8.2UH, 5%	0652060005
L20	INDUCTOR, MOLDED, 8.2UH, 5%	0652060005
L21	INDUCTOR, MOLDED, 15UH, 5%	0659070006
L22	INDUCTOR, MOLDED, 6.8UH, 5%	0659210002
L23	INDUCTOR, MOLDED, 0.18UH, 5%	0648740005
L24	INDUCTOR, MOLDED, 0.18UH, 5%	0648740005
P3	CONNECTOR, RF,RIGHT ANGLE	1010730002
P4	CONNECTOR, RF,RIGHT ANGLE	1010730002
Q2	TRANSISTOR, NPN, SI. 2N4124	0448010003

Q5	TRANSISTOR, N-CH. FET 2N5457	1010120026
Q6	TRANSISTOR, N-CH. FET 2N5457	1010120026
Q7	TRANSISTOR, N-CH. FET 2N5457	1010120026
Q8	TRANSISTOR, N-CH. FET 2N5457	1010120026
Q9	TRANSISTOR, PNP, SI. 2N2907A	0448390001
Q10	TRANSISTOR, PNP, SI. 2N2907A	0448390001
Q11	TRANSISTOR, PNP, SI. 2N2907A	0448390001
Q12	TRANSISTOR, NPN, SI. 2N4124	0448010003
Q13	TRANSISTOR, NPN, SI. 2N4124	0448010003
Q14	TRANSISTOR, N-CH. FET 2N5457	1010120026
Q15	TRANSISTOR, NPN, SI. 2N4124	0448010003
Q16	TRANSISTOR, N-CH, FET 2N7000	1011050013
Q17	TRANSISTOR, N-CH, FET 2N7000	1011050013
Q18	TRANSISTOR, NPN, SI. 2N2222A	0448580004
Q19	TRANSISTOR, NPN, SI MJE200	1011450038
Q20	TRANSISTOR, N-CH, FET 2N7000	1011050013
Q21	TRANSISTOR, N-CH, FET 2N7000	1011050013
Q22	TRANSISTOR, N-CH, FET 2N7000	1011050013
Q23	TRANSISTOR, N-CH, FET 2N7000	1011050013
R1	RESISTOR 10K, 5%, 1/8W	1010801031
R2	RESISTOR 10K, 5%, 1/8W	1010801031
R3	POT. 10K, 10% 1/2W, 25 TURNS	1004880014
R4	RESISTOR 1K, 5%, 1/8W	1010801023
R5	RESISTOR 1K, 5%, 1/8W	1010801023
R6	RESISTOR 4.7K, 5%, 1/8W	1010804723
R9	RESISTOR 31.6K 1%, 1/8W	1004050020
R10	POT. 10K, 10% 1/2W, 25 TURNS	1004880014
R11	RESISTOR 31.6K 1%, 1/8W	1004050020
R12	RESISTOR 1K, 5%, 1/8W	1010801023
R13	RESISTOR 100, 5%, 1/8W	1010801015
R14	RESISTOR 100, 5%, 1/8W	1010801015
R15	RESISTOR 820, 5%, 1/8W	1010808214
R16	RESISTOR 100, 5%, 1/8W	1010801015
R17	RESISTOR 1.2K, 5%, 1/8W	1010801228
R18	RESISTOR 1K, 5%, 1/8W	1010801023
R19	RESISTOR 2.7K, 5%, 1/8W	1010802721
R20	RESISTOR 2.7K, 5%, 1/8W	1010802721
R21	RESISTOR 10K, 5%, 1/8W	1010801031
R22	RESISTOR 68K, 5%, 1/8W	1010806831
R26	RESISTOR 68, 5%, 1/8W	1010806807
R27	RESISTOR 150, 5%, 1/8W	1010801511
R28	RESISTOR 68, 5%, 1/8W	1010806807
R29	RESISTOR 10K, 5%, 1/8W	1010801031
R30	RESISTOR 22K, 5%, 1/8W	1010802232
R31	RESISTOR 10K, 5%, 1/8W	1010801031
R32	RESISTOR 1K, 5%, 1/8W	1010801023
R33	RESISTOR 2.7K, 5%, 1/8W	1010802721
R34	RESISTOR 4.7K, 5%, 1/8W	1010804723
R35	RESISTOR 10K, 5%, 1/8W	1010801031
R36	RESISTOR 10K, 5%, 1/8W	1010801031
R37	RESISTOR 22K, 5%, 1/8W	1010802232
R38	RESISTOR 31.6K 1%, 1/8W	1004050020
R39	POT. 10K, 10% 1/2W, 25 TURNS	1004880014
R40	RESISTOR 31.6K 1%, 1/8W	1004050020
R41	RESISTOR 1K, 5%, 1/8W	1010801023
R42	RESISTOR 100, 5%, 1/8W	1010801015
R43	RESISTOR 100, 5%, 1/8W	1010801015
R44	RESISTOR 820, 5%, 1/8W	1010808214

R45	RESISTOR 100, 5%, 1/8W	1010801015
R46	RESISTOR 1.2K, 5%, 1/8W	1010801228
R47	RESISTOR 1K, 5%, 1/8W	1010801023
R48	RESISTOR 2.7K, 5%, 1/8W	1010802721
R49	RESISTOR 2.7K, 5%, 1/8W	1010802721
R50	RESISTOR 10K, 5%, 1/8W	1010801031
R51	RESISTOR 68K, 5%, 1/8W	1010806831
R55	RESISTOR 10K, 5%, 1/8W	1010801031
R56	RESISTOR 10K, 5%, 1/8W	1010801031
R57	RESISTOR 4.7K, 5%, 1/8W	1010804723
R58	RESISTOR 4.7K, 5%, 1/8W	1010804723
R59	RESISTOR 1M, 10%, 1/4W	0170650006
R60	RESISTOR 2.7K, 5%, 1/8W	1010802721
R61	RESISTOR 270, 5%, 1/8W	1010802712
R62	RESISTOR 1.91K 1%, 1/8W	1008530018
R63	RESISTOR, 3010, 1%, 1/8W	1010570013
R64	RESISTOR, 3010, 1%, 1/8W	1010570013
R65	RESISTOR, 6040, 1%, 1/8W	1010580019
R66	RESISTOR, 6040, 1%, 1/8W	1010580019
R67	RESISTOR 1M, 10%, 1/4W	0170650006
R68	RESISTOR 1K, 5%, 1/8W	1010801023
R69	RESISTOR 10K, 5%, 1/8W	1010801031
R70	RESISTOR 10K, 5%, 1/8W	1010801031
R71	RESISTOR 1.5K, 10%, 1/4W	0172470005
R72	RESISTOR 220, 5%, 1/8W	1010802216
R73	RESISTOR 3.3K, 5%, 1/8W	1010803328
R74	RESISTOR 1M, 10%, 1/4W	0170650006
R75	RESISTOR 2.7K, 5%, 1/8W	1010802721
R76	RESISTOR 270, 5%, 1/8W	1010802712
R77	RESISTOR 4.7K, 5%, 1/8W	1010804723
R78	RESISTOR 4.7K, 5%, 1/8W	1010804723
R79	RESISTOR 1.91K 1%, 1/8W	1008530018
R80	RESISTOR, 3010, 1%, 1/8W	1010570013
R81	RESISTOR, 3010, 1%, 1/8W	1010570013
R82	RESISTOR, 6040, 1%, 1/8W	1010580019
R83	RESISTOR, 6040, 1%, 1/8W	1010580019
R84	RESISTOR 1M, 10%, 1/4W	0170650006
R85	RESISTOR 270, 5%, 1/8W	1010802712
R86	RESISTOR 1K, 5%, 1/8W	1010801023
R87	POT. 10K, 10% 1/2W, 25 TURNS	1004880014
R88	RESISTOR 2.2K, 5%, 1/8W	1010802224
R89	RESISTOR 10K, 5%, 1/8W	1010801031
R90	RESISTOR 10K, 5%, 1/8W	1010801031
R91	RESISTOR 10K, 5%, 1/8W	1010801031
R92	RESISTOR 10K, 5%, 1/8W	1010801031
R93	RESISTOR 270, 5%, 1/8W	1010802712
R94	RESISTOR 270, 5%, 1/8W	1010802712
R95	RESISTOR 18, 5%, 1/8W	1010801805
R96	RESISTOR 270, 5%, 1/8W	1010802712
R97	RESISTOR 270, 5%, 1/8W	1010802712
R98	RESISTOR 18, 5%, 1/8W	1010801805
R99	RESISTOR 330, 5%, 1/8W	1010803310
R100	RESISTOR 2.7K, 5%, 1/8W	1010802721
R101	RESISTOR 4.7K, 5%, 1/8W	1010804723
R102	RESISTOR 1.2K, 5%, 1/8W	1010801228
R103	RESISTOR 1.2K, 5%, 1/8W	1010801228
R104	RESISTOR 330, 5%, 1/8W	1010803310
R105	RESISTOR 2.7K, 5%, 1/8W	1010802721

Figure 5.8.13 PC Assembly, IF 1A2A4, page 2/10.

R106	RESISTOR 1.2K, 5%, 1/8W	1010801228
R107	RESISTOR 4.7K, 5%, 1/8W	1010804723
R108	RESISTOR 330, 5%, 1/8W	1010803310
R109	RESISTOR 2.7K, 5%, 1/8W	1010802721
R110	RESISTOR 4.7K, 5%, 1/8W	1010804723
R111	RESISTOR 1.2K, 5%, 1/8W	1010801228
R112	RESISTOR 1.2K, 5%, 1/8W	1010801228
R113	RESISTOR 1.2K, 5%, 1/8W	1010801228
R114	RESISTOR 1.2K, 5%, 1/8W	1010801228
R115	RESISTOR 1.2K, 5%, 1/8W	1010801228
R116	RESISTOR 1.2K, 5%, 1/8W	1010801228
R117	RESISTOR 1.2K, 5%, 1/8W	1010801228
R118	RESISTOR 150, 5%, 1/8W	1010801511
R119	RESISTOR 39, 5% 1/8W	1010803905
R120	RESISTOR 150, 5%, 1/8W	1010801511
R121	RESISTOR 10K, 5%, 1/8W	1010801031
R122	POT. 10K, 10% 1/2W, 25 TURNS	1004880014
R123	RESISTOR 12K, 5%, 1/8W	1010801236
R124	RESISTOR 120K, 5%, 1/8W	1010801244
R125	RESISTOR 10, 5%, 1/8W	1010801007
R126	RESISTOR 1.8K, 5%, 1/8W	1010801821
R127	RESISTOR 2.7K, 5%, 1/8W	1010802721
R130	POT. 2K, 10% 3/4W, 15 TURNS	0338490060
R131	RESISTOR 1K, 5%, 1/8W	1010801023
R132	RESISTOR 10K, 5%, 1/8W	1010801031
R133	POT. 2K, 10% 3/4W, 15 TURNS	0338490060
R134	RESISTOR 10, 5%, 1/8W	1010801007
R135	RESISTOR 1.8K, 5%, 1/8W	1010801821
R136	RESISTOR 10K, 5%, 1/8W	1010801031
R137	RESISTOR 12K, 5%, 1/8W	1010801236
R138	RESISTOR 120K, 5%, 1/8W	1010801244
R139	RESISTOR 10K, 5%, 1/8W	1010801031
R140	RESISTOR 10K, 5%, 1/8W	1010801031
R141	RESISTOR 100K, 5%, 1/8W	1010801040
R142	POT. 100K, 10% 1/2W, 25 TURNS	1004820011
R145	POT. 100K, 10% 1/2W, 25 TURNS	1004820011
R146	RESISTOR 4.7K, 5%, 1/8W	1010804723
R147	RESISTOR 4.7K, 5%, 1/8W	1010804723
R148	RESISTOR 10K, 5%, 1/8W	1010801031
R149	RESISTOR 10K, 5%, 1/8W	1010801031
R150	RESISTOR 5.6K, 5%, 1/8W	1010805622
R151	POT. 100K, 10% 1/2W, 25 TURNS	1004820011
R152	RESISTOR 100, 5%, 1/8W	1010801015
R153	RESISTOR 100, 5%, 1/8W	1010801015
R154	RESISTOR 4.7K, 5%, 1/8W	1010804723
R155	RESISTOR 4.7K, 5%, 1/8W	1010804723
R156	RESISTOR 47K, 5%, 1/8W	1010804731
R157	RESISTOR 12K, 5%, 1/8W	1010801236
R158	RESISTOR 12K, 5%, 1/8W	1010801236
R159	RESISTOR 1.2K, 5%, 1/8W	1010801228
R160	RESISTOR 100K, 5%, 1/8W	1010801040
R161	RESISTOR 12K, 5%, 1/8W	1010801236
R162	RESISTOR 390, 5%, 1/8W	1010803913
R163	RESISTOR 10K, 5%, 1/8W	1010801031
R165	RESISTOR 100, 5%, 1/8W	1010801015
R166	RESISTOR 47, 5%, 1/8W	1010804707
R167	RESISTOR 150, 5%, 1/8W	1010801511
R168	RESISTOR 270, 5%, 1/8W	1010802712

R169	RESISTOR 18, 5%, 1/8W	1010801805
R169	RESISTOR 270, 5%, 1/8W	1010802712
R170	RESISTOR 270, 5%, 1/8W	1010802712
R171	RESISTOR 10K, 5%, 1/8W	1010801031
R172	RESISTOR 10K, 5%, 1/8W	1010801031
R173	RESISTOR 10K, 5%, 1/8W	1010801031
R174	RESISTOR 10K, 5%, 1/8W	1010801031
R175	RESISTOR 10K, 5%, 1/8W	1010801031
R176	RESISTOR 150, 5%, 1/8W	1010801511
R177	RESISTOR 39, 5% 1/8W	1010803905
R178	RESISTOR 150, 5%, 1/8W	1010801511
R179	RESISTOR 1.5K, 5%, 1/8W	1010801520
R180	RESISTOR 1.5K, 5%, 1/8W	1010801520
R182	RESISTOR 560K, 5%, 1/8W	1010805649
R183	RESISTOR 5.6K, 5%, 1/8W	1010805622
R184	RESISTOR 5.6K, 5%, 1/8W	1010805622
R185	POT. 10K, 10% 1/2W, 25 TURNS	1004880014
R186	RESISTOR 10K, 5%, 1/8W	1010801031
R181	RESISTOR 100, 5%, 1/8W	1010801015
R187	RESISTOR 100, 5%, 1/8W	1010801015
R188	RESISTOR 47, 5%, 1/8W	1010804707
R189	RESISTOR 47, 5%, 1/8W	1010804707
R190	RESISTOR 47K, 5%, 1/8W	1010804731
R191	RESISTOR 1K, 5%, 1/8W	1010801023
R192	RESISTOR 1K, 5%, 1/8W	1010801023
RFC1	CHOKE, POWER	8076104700
RFC2	CHOKE, POWER	8076104700
RFC3	CHOKE, POWER	8076104700
T1	TRANSFORMER COMB/SPL PSC-2-1	1010590022
T2	TRANSFORMER COMB/SPL PSC-2-1	1010590022
U1	IC.LINEAR MC3358P1	1010110012
U2	IC.LINEAR MC1596L	1010050028
U3	IC.LINEAR MC3358P1	1010110012
U4	IC.LINEAR MC1596L	1010050028
U5	IC. DIGITAL 4555B	1010560018
U6	IC. DIGITAL UDN-2981	1006330038
U7	IC. LINEAR LM317L	1010550012
U8	IC, LINEAR LM6321	1010710010
U9	IC, LINEAR LM6321	1010710010
U10	IC LINEAR MAR-4	1010900005
U11	IC. LINEAR MWA130	1010380036
U12	IC LINEAR MAR-4	1010900005
U13	IC. LINEAR MWA130	1010380036
U14	IC LINEAR MAR-4	1010900005
U15	IC LINEAR MAR-4	1010900005
U16	IC LINEAR MAR-4	1010900005
U17	IC. LINEAR MC34074	1011430037
U18	IC. LINEAR MC34074	1011430037
U19	IC LINEAR MAR-4	1010900005
U20	IC. LINEAR MWA130	1010380036
U21	IC. LINEAR LM311N	1005760021
U22	IC. DIGITAL X9103	1010820028
U23	IC.LINEAR MC3358P1	1010110012
U24	IC. LINEAR MC34072	1011440032
X1	MIXER, BROADBAND, BALANCED	1003300006
X2	MIXER, BROADBAND, BALANCED	1003300006
	MOUNTING PLATE, IF ASSY	8076081602

Figure 5.8.13 PC Assembly, IF 1A2A4, page 3/10.

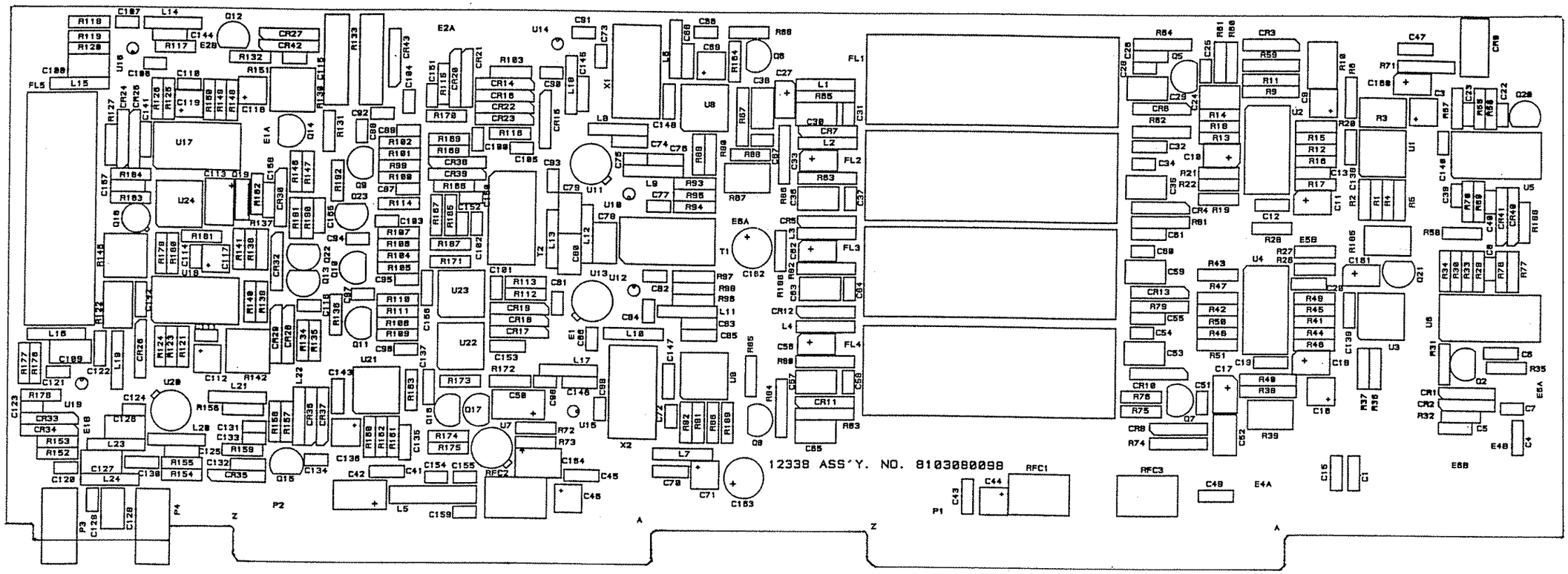

Figure 5.8.13 PC Assembly, IF 1A2A4, page 4/10.

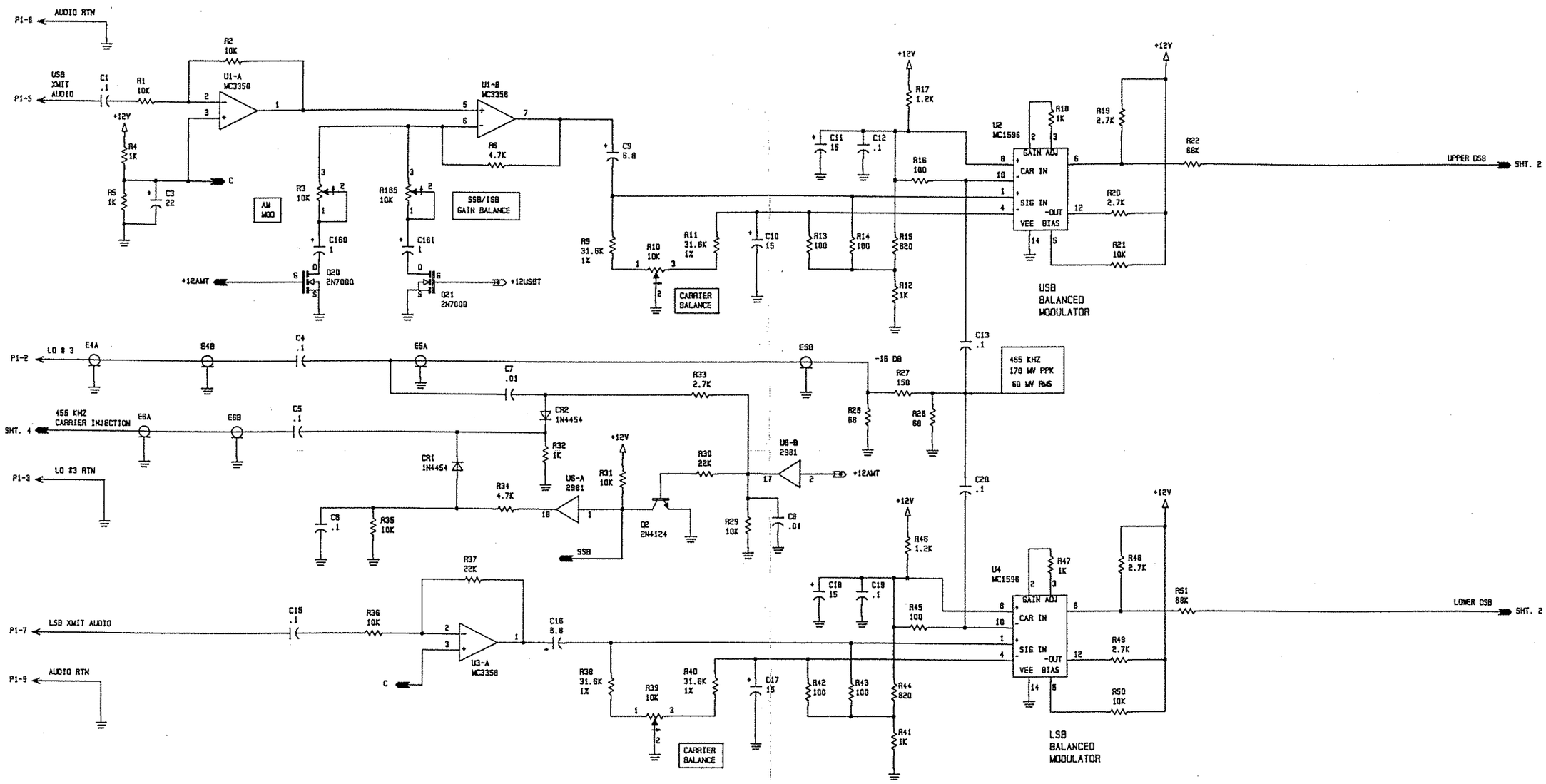

Figure 5.8.13 PC Assembly, IF 1A2A4, page 5/10.

FILTER SELECT CODE		
STATUS	A	B
USB	0	0
DATA	1	0
AM	0	1
OFF	1	1

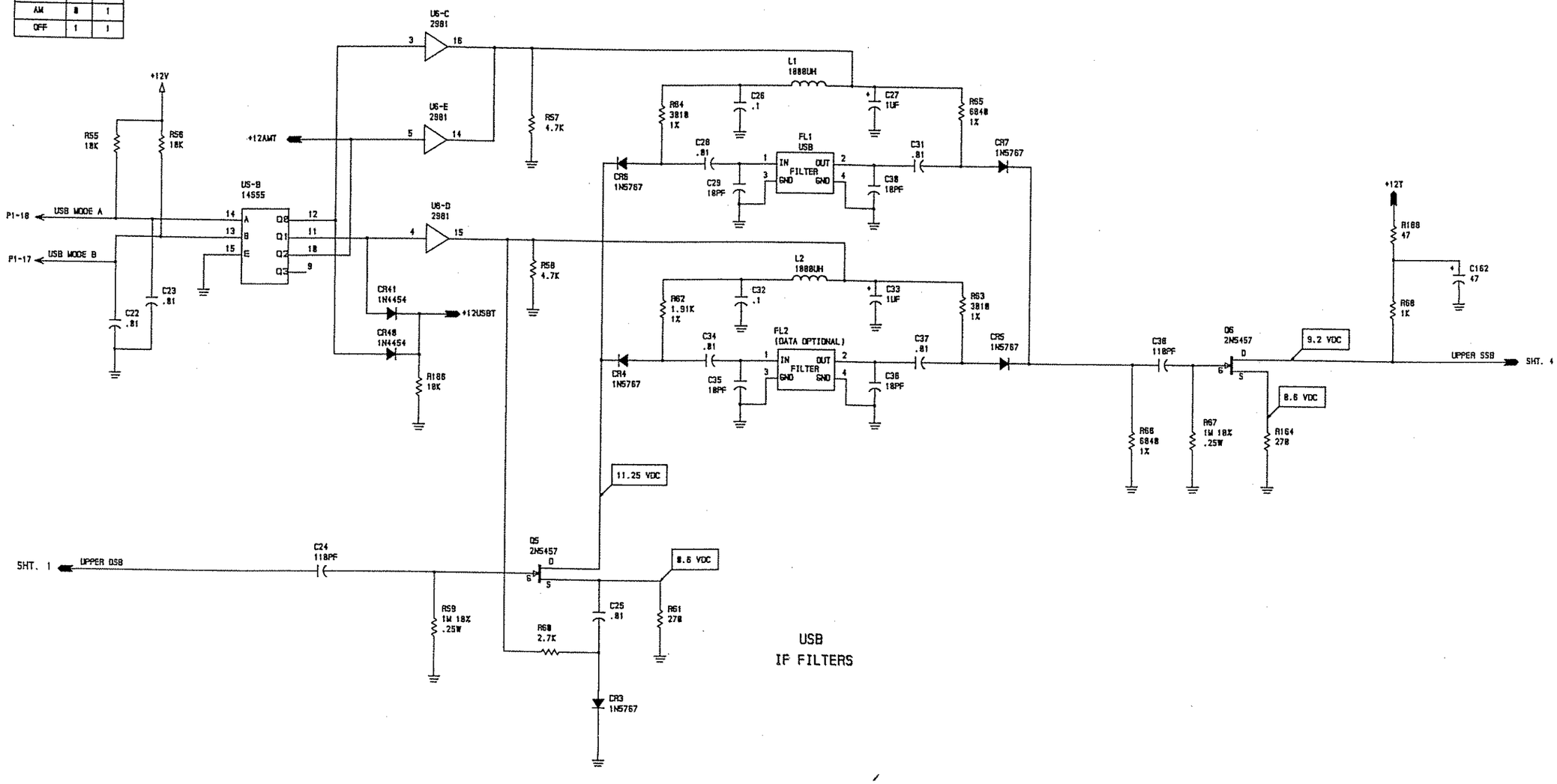

Figure 5.8.13 PC Assembly, IF 1A2A4, page 6/10.

FILTER SELECT CODE		
STATUS	A	B
LSB	0	0
DATA	1	0
OFF	1	1

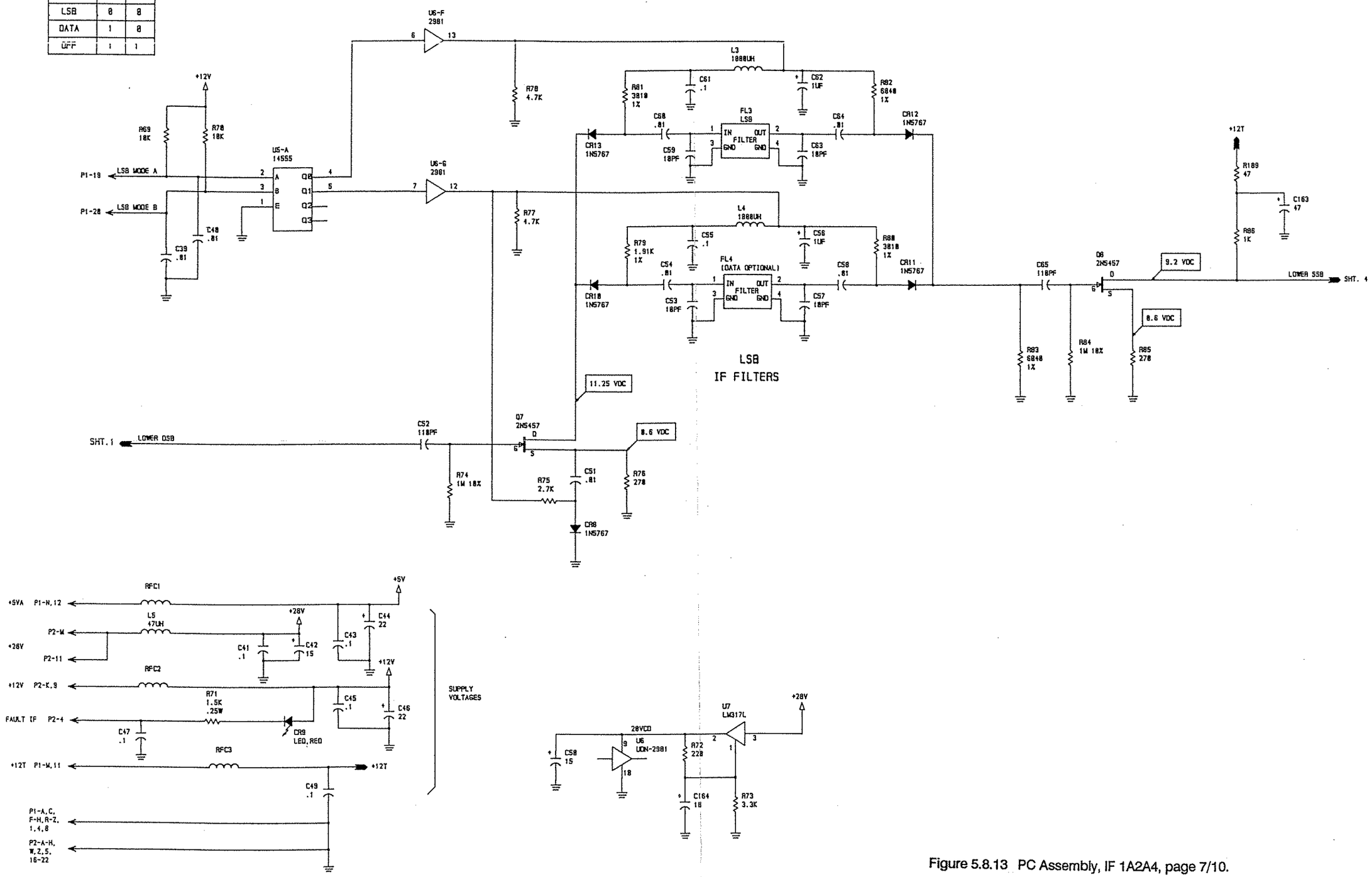

Figure 5.8.13 PC Assembly, IF 1A2A4, page 7/10.

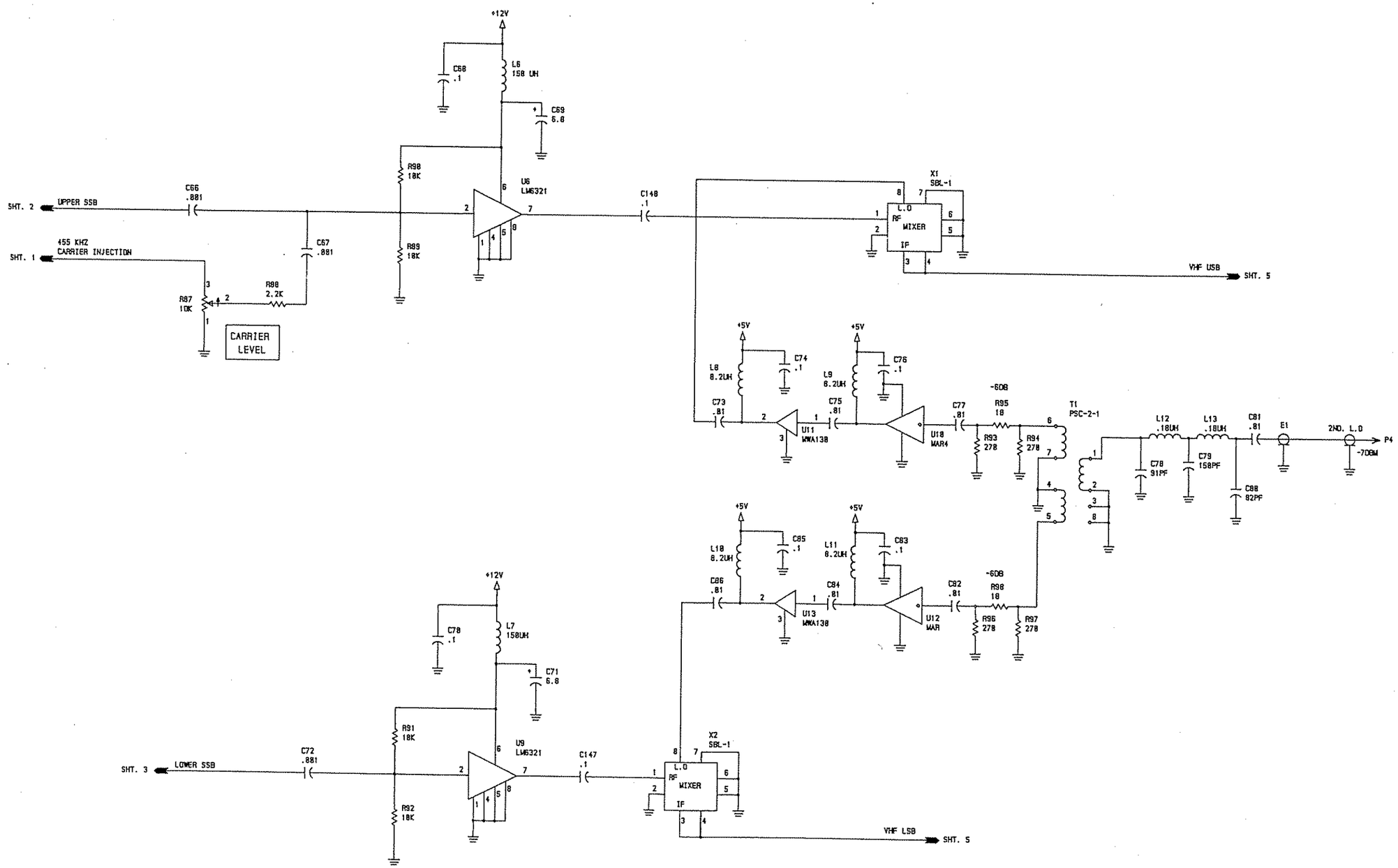

Figure 5.8.13 PC Assembly, IF 1A2A4, page 8/10.

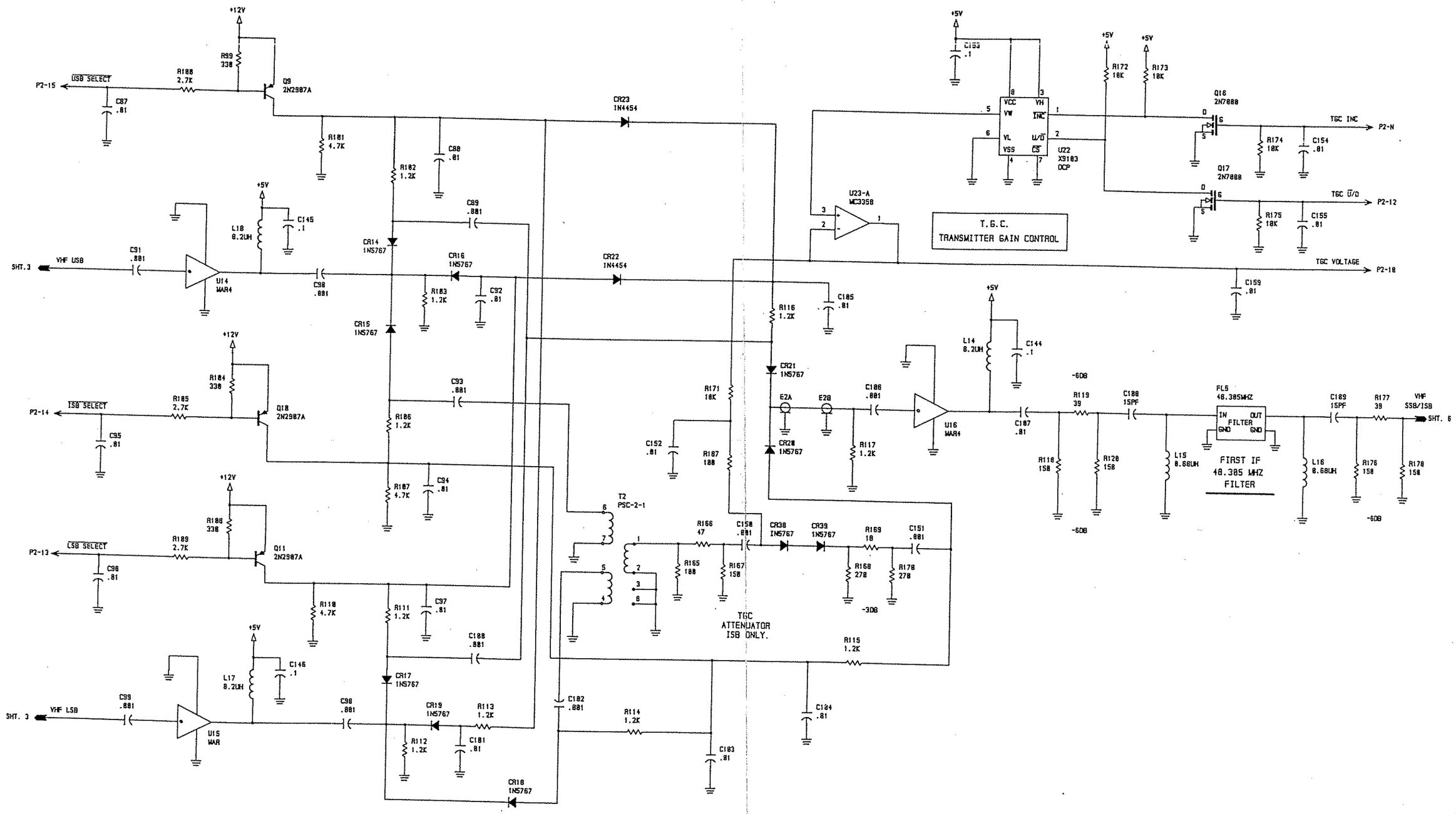

Figure 5.8.13 PC Assembly, IF 1A2A4, page 9/10.

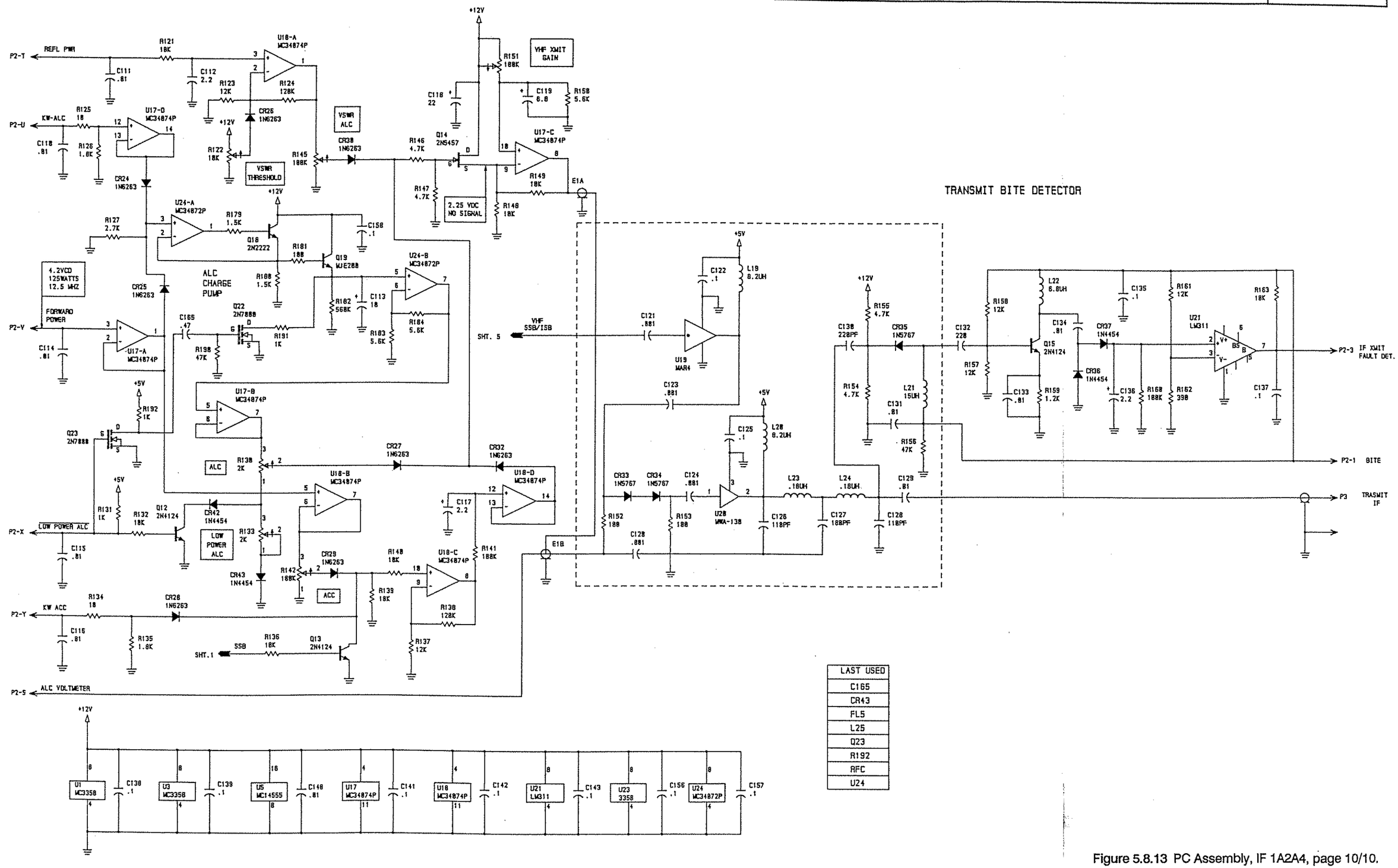

LAST USED
C165
CR43
FL5
L25
Q23
R192
RFC
U24

Figure 5.8.13 PC Assembly, IF 1A2A4, page 10/10.

PC ASSY, FRONT END 1A2A5

	PC ASSY, FRONT END 1A2A5	8076100097
C1	CAP. 0.1µF, 50V, X7R, 20%	0281610002
C2	CAP. 0.1µF, 50V, X7R, 20%	0281610002
C3	CAP. 0.1µF, 50V, X7R, 20%	0281610002
C4	CAP. 0.1µF, 50V, X7R, 20%	0281610002
C5	CAP. 1µF, 35V, 196D	0281660000
C6	CAP. 1µF, 35V, 196D	0281660000
C7	CAP. 0.1µF, 50V, X7R, 20%	0281610002
C8	CAP. .01µF, 50V, X7R 20%	0281730008
C9	CAP. .01µF, 50V, X7R 20%	0281730008
C10	CAP. .01µF, 50V, X7R 20%	0281730008
C11	CAP. 0.1µF, 50V, X7R, 20%	0281610002
C12	CAP. .47µF, 50V, X7R 20%	0283377771
C13	CAP. .01µF, 50V, X7R 20%	0281730008
C15	CAP. 1µF, 35V, 196D	0281660000
C16	CAP. 0.1µF, 50V, X7R, 20%	0281610002
C17	CAP. 0.1µF, 50V, X7R, 20%	0281610002
C18	CAP. 0.1µF, 50V, X7R, 20%	0281610002
C19	CAP. 0.1µF, 50V, X7R, 20%	0281610002
C20	CAP. 0.1µF, 50V, X7R, 20%	0281610002
C21	CAP. 0.1µF, 50V, X7R, 20%	0281610002
C22	CAP. 0.1µF, 50V, X7R, 20%	0281610002
C23	CAP. 1800PF, 500V, DM19, 2%	0281300003
C24	CAP. 1300PF, 500V, DM19, 2%	0281380007
C25	CAP. 910PF, 500V, DM19, 2%	0281450005
C26	CAP. 680PF, 500V, DM19, 2%	0282290001
C27	CAP. 430PF, 500V, DM15, 2%	0282370005
C28	CAP. 270PF, 500V, DM15, 2%	0280970005
C29	CAP. 200PF, 500V, DM15, 2%	1010430025
C30	CAP. 130PF, 500V, DM15, 2%	0281010005
C31	CAP. 230PF, 500V, DM15, 5%	0276200004
C32	CAP. 130PF, 500V, DM15, 2%	0281010005
C33	CAP. 120PF, 500V, DM15, 2%	0281180008
C34	CAP. 68PF, 500V, DM15, 2%	1000050041
C35	CAP. 43PF, 500V, DM15, 2%	1001240031
C36	CAP. 30PF, 500V, DM15, 2%	1010440021
C37	CAP. 22PF, 500V, CD15, 2%	1000050025
C38	CAP. 12PF, 500V, DM10, 5%	0260280003
C39	CAP. 0.1µF, 50V, X7R, 20%	0281610002
C40	CAP. 1300PF, 500V, DM19, 2%	0281380007
C41	CAP. 1100PF, 500V, DM19, 2%	0281000000
C42	CAP. 680PF, 500V, DM19, 2%	0282290001
C43	CAP. 560PF, 500V, DM19, 2%	0281060002
C44	CAP. 360PF, 500V, DM15, 2%	0281160007
C45	CAP. 240PF, 500V, DM15, 2%	0281140006
C46	CAP. 160PF, 500V, DM15, 2%	1010460021
C47	CAP. 110PF, 500V, DM15, 2%	0281460001
C48	CAP. 1800PF, 500V, DM19, 2%	0281300003
C49	CAP. 1300PF, 500V, DM19, 2%	0281380007
C50	CAP. 910PF, 500V, DM19, 2%	0281450005
C51	CAP. 680PF, 500V, DM19, 2%	0282290001
C52	CAP. 430PF, 500V, DM15, 2%	0282370005
C53	CAP. 270PF, 500V, DM15, 2%	0280970005
C54	CAP. 200PF, 500V, DM15, 2%	1010430025
C55	CAP. 130PF, 500V, DM15, 2%	0281010005
C56	CAP. 0.1µF, 50V, X7R, 20%	0281610002
C57	CAP. 0.1µF, 50V, X7R, 20%	0281610002
C58	CAP. 0.1µF, 50V, X7R, 20%	0281610002
C59	CAP. 0.1µF, 50V, X7R, 20%	0281610002
C60	CAP. 0.1µF, 50V, X7R, 20%	0281610002
C61	CAP. 0.1µF, 50V, X7R, 20%	0281610002
C62	CAP. 0.1µF, 50V, X7R, 20%	0281610002
C63	CAP. 0.1µF, 50V, X7R, 20%	0281610002
C64	CAP. 0.1µF, 50V, X7R, 20%	0281610002
C67	CAP. .01µF, 50V, X7R 20%	0281730008
C70	CAP. .01µF, 50V, X7R 20%	0281730008
C71	CAP. .01µF, 50V, X7R 20%	0281730008
C72	CAP. 22µF, 15V, 196D	0281690006
C73	CAP. 0.1µF, 50V, X7R, 20%	0281610002
C74	CAP. 0.1µF, 50V, X7R, 20%	0281610002
C75	CAP. .01µF, 50V, X7R 20%	0281730008
C76	CAP. .01µF, 50V, X7R 20%	0281730008
C77	CAP. 15µF, 35V	0282240004
C78	CAP. 1µF, 35V, 196D	0281660000
C82	CAP. 30PF, 500V, DM15, 2%	1010440021
C83	CAP. 0.1µF, 50V, X7R, 20%	0281610002
C85	CAP. 130PF, 500V, DM15, 2%	0281010005
C87	CAP. 130PF, 500V, DM15, 2%	0281010005
C88	CAP. 2.2µF, 35V, T368	0273950002
C89	CAP. 30PF, 500V, DM15, 2%	1010440021
C90	CAP. 1µF, 35V, 196D	0281660000
C91	CAP. 22µF, 15V, 196D	0281690006
C92	CAP. 22µF, 15V, 196D	0281690006
C93	CAP. .01µF, 50V, X7R 20%	0281730008
C94	CAP. .01µF, 50V, X7R 20%	0281730008
C95	CAP. 22µF, 15V, 196D	0281690006
C96	CAP. .01µF, 50V, X7R 20%	0281730008
C97	CAP. .01µF, 50V, X7R 20%	0281730008
C98	CAP. .01µF, 50V, X7R 20%	0281730008
C99	CAP. 0.1µF, 50V, X7R, 20%	0281610002
C100	CAP. .01µF, 50V, X7R 20%	0281730008
C102	CAP. 0.1µF, 50V, X7R, 20%	0281610002
C103	CAP. 0.1µF, 50V, X7R, 20%	0281610002
C104	CAP. 1000PF, 500V, DM19, 5%	0249270005
C105	CAP. 750PF, 300V, DM15, 5%	0275410005
C106	CAP. .47µF, 50V, X7R 20%	0283377771
C107	CAP. 220PF, 500V, DM15, 5%	0285957775
C108	CAP. 680PF, 300V, DM15, 5%	0286240009
C109	CAP. .01µF, 50V, X7R 20%	0281730008
C110	CAP. .01µF, 50V, X7R 20%	0281730008
C111	CAP. 0.1µF, 50V, X7R, 20%	0281610002
C112	CAP. .01µF, 50V, X7R 20%	0281730008
C113	CAP. 0.1µF, 50V, X7R, 20%	0281610002
C114	CAP. .01µF, 50V, X7R 20%	0281730008
C115	CAP. 0.1µF, 50V, X7R, 20%	0281610002
C116	CAP. 0.1µF, 50V, X7R, 20%	0281610002
C117	CAP. 0.1µF, 50V, X7R, 20%	0281610002
C118	CAP. .01µF, 50V, X7R 20%	0281730008
C119	CAP. 0.1µF, 50V, X7R, 20%	0281610002
C120	CAP. .01µF, 50V, X7R 20%	0281730008
C121	CAP. .01µF, 50V, X7R 20%	0281730008
C122	CAP. .01µF, 50V, X7R 20%	0281730008
C123	CAP. 0.1µF, 50V, X7R, 20%	0281610002
C124	CAP. 0.1µF, 50V, X7R, 20%	0281610002
C125	CAP. 0.1µF, 50V, X7R, 20%	0281610002
C126	CAP. 0.1µF, 50V, X7R, 20%	0281610002
C127	CAP. 0.1µF, 50V, X7R, 20%	0281610002
C128	CAP. 47µF, 20V, 196D	0281700001
C129	CAP. 1µF, 35V, 196D	0281660000
C130	CAP. 0.1µF, 50V, X7R, 20%	0281610002
C131	CAP. .01µF, 50V, X7R 20%	0281730008
C133	CAP. 47µF, 20V, 196D	0281700001
C134	CAP. 0.1µF, 50V, X7R, 20%	0281610002
C135	CAP. 0.1µF, 50V, X7R, 20%	0281610002
C136	CAP. 1µF, 35V, 196D	0281660000
C137	CAP. 0.1µF, 50V, X7R, 20%	0281610002
C138	CAP. 0.1µF, 50V, X7R, 20%	0281610002
C139	CAP. 150PF, 500V, DM10, 5%	0293430004
C140	CAP. 0.1µF, 50V, X7R, 20%	0281610002
C141	CAP. .01µF, 50V, X7R 20%	0281730008
C142	CAP. 0.1µF, 50V, X7R, 20%	0281610002
C143	CAP. 0.1µF, 50V, X7R, 20%	0281610002
C145	CAP. 0.1µF, 50V, X7R, 20%	0281610002
C150	CAP. .01µF, 50V, X7R 20%	0281730008
C151	CAP. .01µF, 50V, X7R 20%	0281730008
C152	CAP. .01µF, 50V, X7R 20%	0281730008
C153	CAP. .01µF, 50V, X7R 20%	0281730008
C154	CAP. .01µF, 50V, X7R 20%	0281730008
C155	CAP. .01µF, 50V, X7R 20%	0281730008
C156	CAP. .01µF, 50V, X7R 20%	0281730008
C159	CAP. 0.1µF, 50V, X7R, 20%	0281610002
C160	CAP. 0.1µF, 50V, X7R, 20%	0281610002
C161	CAP. 0.1µF, 50V, X7R, 20%	0281610002
C162	CAP. 2200PF, 500V, DM19, 5%	0299650006
C163	CAP. 10PF, 500V, DM10	0259830003
C164	CAP. 220PF, 500V, DM10, 2%	1010870009
C165	CAP. .01µF, 50V, X7R 20%	0281730008
C166	CAP. .01µF, 50V, X7R 20%	0281730008
C167	CAP. .01µF, 50V, X7R 20%	0281730008
C168	CAP. .01µF, 50V, X7R 20%	0281730008
CR1	DIODE, RECTIFIER 1N4004	0405180004
CR2	DIODE, RECTIFIER 1N4004	0405180004
CR3	DIODE, RECTIFIER 1N4004	0405180004
CR4	DIODE, RECTIFIER 1N4004	0405180004
CR5	DIODE, RECTIFIER 1N4004	0405180004
CR6	DIODE, RECTIFIER 1N4004	0405180004
CR7	DIODE, RECTIFIER 1N4004	0405180004
CR8	DIODE, RECTIFIER 1N4004	0405180004
CR9	DIODE, RECTIFIER 1N4004	0405180004
CR10	DIODE, RECTIFIER 1N4004	0405180004
CR11	DIODE, RECTIFIER 1N4004	0405180004
CR12	DIODE, RECTIFIER 1N4004	0405180004
CR13	DIODE, RECTIFIER 1N4004	0405180004
CR14	DIODE, RECTIFIER 1N4004	0405180004
CR15	DIODE, RECTIFIER 1N4004	0405180004
CR16	DIODE, RECTIFIER 1N4004	0405180004
CR17	DIODE, RECTIFIER 1N4004	0405180004
CR18	DIODE, RECTIFIER 1N4004	0405180004
CR19	DIODE, RECTIFIER 1N4004	0405180004
CR20	DIODE, RECTIFIER 1N4004	0405180004
CR21	DIODE, RECTIFIER 1N4004	0405180004
CR22	DIODE, RECTIFIER 1N4004	0405180004
CR24	DIODE, SIGNAL, SIL 1N4454	0405270003
CR25	DIODE, SIGNAL, SIL 1N4454	0405270003
CR26	DIODE, PIN 1N5767	0405570007
CR27	DIODE, LED, RED, PC MOUNT	1008480029
CR28	DIODE, PIN 1N5767	0405570007
CR29	DIODE, PIN 1N5767	0405570007
CR36	DIODE, SIGNAL, SIL 1N4454	0405270003
FB1	FERRITE BEAD, .400L	1010900013
L1	INDUCTOR, MOLDED, 68µH, 5%	0651650003
L2	INDUCTOR, MOLDED, 47µH, 5%	0652680003
L3	INDUCTOR, MOLDED, 47µH, 5%	0652680003
L4	INDUCTOR, MOLDED, 120µH, 10%	0659330008
L5	INDUCTOR, MOLDED, 47µH, 5%	0652680003
L6	INDUCTOR, MOLDED, 47µH, 5%	0652680003
L7	INDUCTOR, MOLDED, 3.3µH, 5%	0658920006
L8	INDUCTOR, MOLDED, 2.2µH, 5%	0649890001
L9	INDUCTOR, MOLDED, 1.5µH, 5%	0649270002
L10	INDUCTOR, MOLDED, 1.2µH, 5%	0649910001
L11	INDUCTOR, MOLDED, 0.75µH, 5%	1010480022
L12	INDUCTOR, MOLDED, 0.47µH, 5%	0649410009
L13	INDUCTOR, MOLDED, 0.33µH, 5%	1010490028
L14	INDUCTOR, MOLDED, 22µH, 5%	0650000005
L22	INDUCTOR, MOLDED, 5.6µH, 5%	0650360001
L23	INDUCTOR, MOLDED, 3.9µH, 5%	0650480007
L24	INDUCTOR, MOLDED, 3.0µH, 5%	1010500023
L25	INDUCTOR, MOLDED, 2.0µH, 5%	1010000039
L26	INDUCTOR, MOLDED, 1.2µH, 5%	0649910001
L27	INDUCTOR, MOLDED, 0.82µH, 5%	0652320007
L28	INDUCTOR, MOLDED, 0.56µH, 5%	0649530004
L29	INDUCTOR, MOLDED, 0.39µH, 5%	0649770005
L30	INDUCTOR, MOLDED, 33µH, 5%	0659690004
L31	INDUCTOR, MOLDED, 33µH, 5%	0659690004
L32	INDUCTOR, MOLDED, 18µH, 5%	1010040031
L33	INDUCTOR, MOLDED, 15µH, 5%	0659070006
L34	INDUCTOR, MOLDED, 12µH, 5%	0652700004
L35	INDUCTOR, MOLDED, 7.5µH, 5%	1010050036
L36	INDUCTOR, MOLDED, 4.7µH, 5%	0651910005
L37	INDUCTOR, MOLDED, 3.3µH, 5%	0658920006
L38	INDUCTOR, MOLDED, 22µH, 5%	0650000005
L46	INDUCTOR, MOLDED, 47µH, 5%	0652680003
L47	INDUCTOR, MOLDED, 3.3µH, 5%	0658920006
L48	INDUCTOR, MOLDED, 2.2µH, 5%	0649890001
L49	INDUCTOR, MOLDED, 1.5µH, 5%	0649270002
L50	INDUCTOR, MOLDED, 1.2µH, 5%	0649910001
L51	INDUCTOR, MOLDED, 0.75µH, 5%	1010480022
L52	INDUCTOR, MOLDED, 0.47µH, 5%	0649410009
L53	INDUCTOR, MOLDED, 0.33µH, 5%	1010490028
L54	INDUCTOR, MOLDED, 47µH, 5%	0652680003
L55	INDUCTOR, MOLDED, 47µH, 5%	0652680003
L56	INDUCTOR, MOLDED, 120µH, 5%	0646660004
L57	INDUCTOR, MOLDED, 47µH, 5%	0652680003
L58	INDUCTOR, MOLDED, 22µH, 5%	0650000005
L59	INDUCTOR, MOLDED, 6.8µH, 10%	0646040006
L60	INDUCTOR, MOLDED, 0.27µH, 5%	0649390008
L61	INDUCTOR, MOLDED, 0.39µH, 5%	0649770005
L62	INDUCTOR, MOLDED, 0.27µH, 5%	0649390008
L63	INDUCTOR, MOLDED, 22µH, 5%	0650000005
L64	INDUCTOR, MOLDED, 3.9µH, 5%	0650480007
L65	INDUCTOR, MOLDED, 3.9µH, 5%	0650480007
L66	INDUCTOR, MOLDED, 47µH, 5%	0652680003
L67	INDUCTOR, MOLDED, 4.7µH, 5%	0651910005
L68	CHOKE, POWER	8076104700
L70	INDUCTOR, MOLDED, 120µH, 10%	0659330008
L71	INDUCTOR, MOLDED, 2.7µH, 5%	0652180001
L76	INDUCTOR, MOLDED, 3.9µH, 5%	0650480007
L77	INDUCTOR, MOLDED, 22µH, 5%	0650000005
L78	INDUCTOR, MOLDED, 220µH, 5%	0650500008
L79	INDUCTOR, MOLDED, 430µH, 5%	0659100002
L80	FERRITE BEAD, 850 PERM	1010410032

Figure 5.8.14 PC Assembly, Front End 1A2A5, page 1/4.

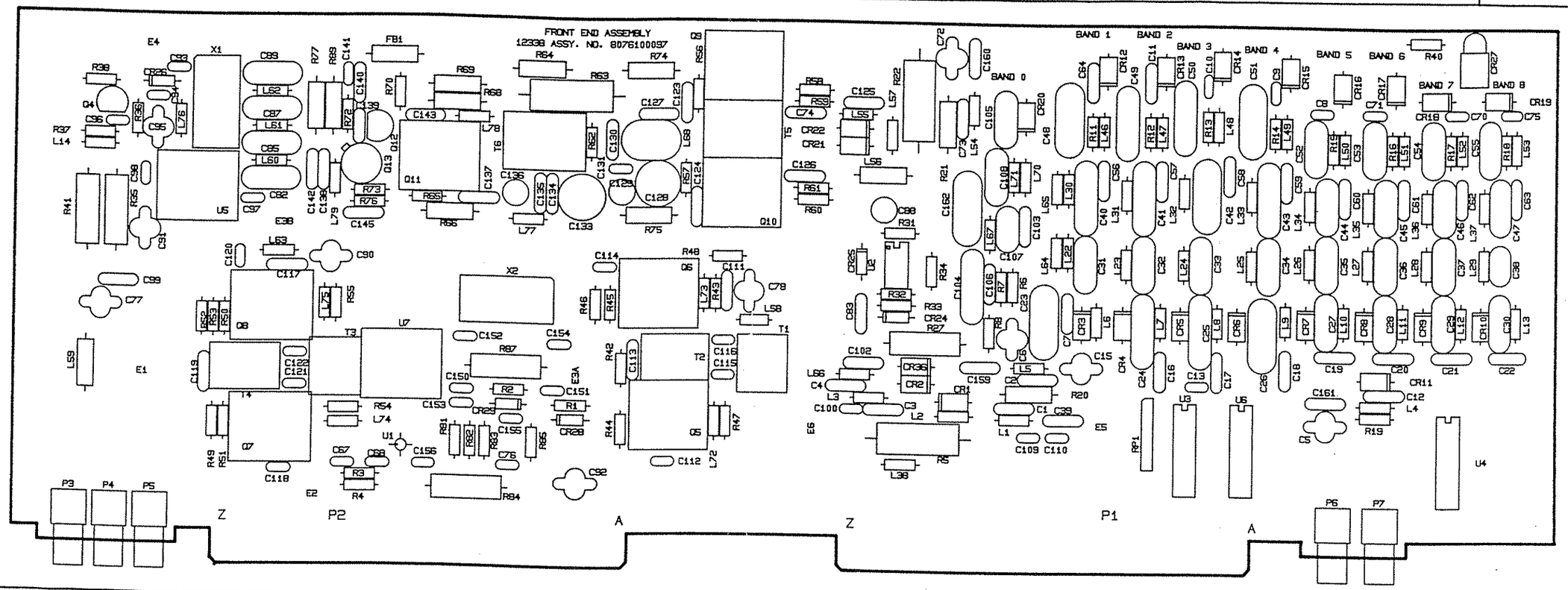

L81	FERRITE BEAD, 850 PERM	1010410032
L82	FERRITE BEAD, 850 PERM	1010410032
L83	FERRITE BEAD, 850 PERM	1010410032
L84	FERRITE BEAD, 850 PERM	1010410032
L85	FERRITE BEAD, 850 PERM	1010410032
L86	FERRITE BEAD, 850 PERM	1010410032
L87	FERRITE BEAD, 850 PERM	1010410032
P3	CONNECTOR, RF,RIGHT ANGLE	1010730002
P4	CONNECTOR, RF,RIGHT ANGLE	1010730002
P5	CONNECTOR, RF,RIGHT ANGLE	1010730002
P6	CONNECTOR, RF,RIGHT ANGLE	1010730002
P7	CONNECTOR, RF,RIGHT ANGLE	1010730002
Q4	TRANSISTOR, NPN, SI. 2N4124	0448010003
Q5	TRANSISTOR, NPN, SI. 2N3866	0448140004
Q6	TRANSISTOR, NPN, SI. 2N3866	0448140004
Q7	TRANSISTOR, NPN, SI. 2N3866	0448140004
Q8	TRANSISTOR, NPN, SI. 2N3866	0448140004
Q9	TRANSISTOR 2N3553	1010320025
Q10	TRANSISTOR 2N3553	1010320025
Q11	TRANSISTOR, NPN, SI. 2N3866	0448140004
Q12	TRANSISTOR, PNP, SI. 2N2907A	0448390001
Q13	TRANSISTOR, NPN, SI. 2N3866	0448140004
R1	RESISTOR 820, 10%, 1/4W	0178210005
R2	RESISTOR 820, 10%, 1/4W	0178210005
R3	RESISTOR 47, 10%, 1/4W	0179360001
R4	RESISTOR 390, 10%, 1/4W	0178330001
R5	RESISTOR, 220, 2W	1008150029
R6	RESISTOR 270, 10%, 1/4W	0178450006
R7	RESISTOR 18, 10%, 1/4W	0184590001
R8	RESISTOR 270, 10%, 1/4W	0178450006

R11	RESISTOR 10K, 10%, 1/4W	0170410005
R12	RESISTOR 10K, 10%, 1/4W	0170410005
R13	RESISTOR 10K, 10%, 1/4W	0170410005
R14	RESISTOR 10K, 10%, 1/4W	0170410005
R15	RESISTOR 10K, 10%, 1/4W	0170410005
R16	RESISTOR 10K, 10%, 1/4W	0170410005
R17	RESISTOR 10K, 10%, 1/4W	0170410005
R18	RESISTOR 10K, 10%, 1/4W	0170410005
R19	RESISTOR 10K, 10%, 1/4W	0170410005
R20	RESISTOR 82, 10%, 1/2W	1010200038
R21	RESISTOR 82, 10%, 1/2W	1010200038
R22	RESISTOR, 220, 2W	1008150029
R27	RESISTOR 47, 10%, 1W	0164990003
R31	RESISTOR 100K, 10%, 1/4W	0170390004
R32	RESISTOR 12K, 10%, 1/4W	0183180003
R33	RESISTOR 1K, 10%, 1/4W	0171560001
R34	RESISTOR 10K, 10%, 1/4W	0170410005
R35	RESISTOR 150, 10%, 1W	0187840008
R36	RESISTOR 10K, 10%, 1/4W	0170410005
R37	RESISTOR 1K, 10%, 1/4W	0171560001
R38	RESISTOR 18, 10%, 1/4W	0184590001
R40	RESISTOR 1K, 10%, 1/4W	0171560001
R41	RESISTOR 100, 10%, 1W	0165540001
R42	RESISTOR 1K, 10%, 1/4W	0171560001
R43	RESISTOR 10, 5%, 1/4W	0177160004
R44	RESISTOR 270, 10%, 1/4W	0178450006
R45	RESISTOR 1K, 10%, 1/4W	0171560001
R46	RESISTOR 270, 10%, 1/4W	0178450006
R47	RESISTOR 47, 10%, 1/4W	0179360001
R48	RESISTOR 47, 10%, 1/4W	0179360001

R49	RESISTOR 1K, 10%, 1/4W	0171560001
R50	RESISTOR 10, 5%, 1/4W	0177160004
R51	RESISTOR 270, 10%, 1/4W	0178450006
R52	RESISTOR 1K, 10%, 1/4W	0171560001
R53	RESISTOR 270, 10%, 1/4W	0178450006
R54	RESISTOR 47, 10%, 1/4W	0179360001
R55	RESISTOR 47, 10%, 1/4W	0179360001
R56	RESISTOR 560, 5%, 1/4W	0183200004
R57	RESISTOR 560, 5%, 1/4W	0183200004
R58	RESISTOR, 4.7, 5%, 1/4W	1001060024
R59	RES,2.7, 10%, 1/4W	1010040022
R60	RESISTOR, 4.7, 5%, 1/4W	1001060024
R61	RES,2.7, 10%, 1/4W	1010040022
R62	RESISTOR 68, 10%, 1/4W	0187960003
R63	RESISTOR 120, 10%, 2W	0194530001
R64	RESISTOR 18, 5%, 1/2W	0184730007
R65	RESISTOR 22, 10%, 1/4W	0192690001
R66	RESISTOR 39, 10%, 1/2W	0165920009
R68	RESISTOR 180, 10%, 1/2W	0173640001
R69	RESISTOR 120, 10%, 1/2W	0186430001
R70	RESISTOR 270, 10%, 1/4W	0178450006
R72	RESISTOR 56, 10%, 1/4W	0174290004
R73	RESISTOR 180, 10%, 1/4W	0175220000
R74	RESISTOR, 1.5, 10%, 1/2W	1010350021
R75	RESISTOR, 1.5, 10%, 1/2W	1010350021
R76	RESISTOR 560, 5%, 1/4W	0183200004
R77	RESISTOR 680, 10%, 1/2W	0167500007
R84	RESISTOR 100, 10%, 1W	0165540001
R85	RESISTOR 820, 10%, 1/4W	0178210005
R87	RESISTOR 100, 10%, 1W	0165540001

R89	RESISTOR 150, 10% 1/2W	1010400037
R90	RESISTOR 470, 5%, 1/8W	1010804715
RP1	RES NTWK 6 PIN SIP 4.7K COM	1006200037
T1	TRANSFORMER, INPUT, RF AMP	8076108705
T2	TRANSFORMER, FEEDBACK,RF AMP	8076108900
T3	TRANSFORMER, INPUT, RF AMP	8076108705
T4	TRANSFORMER, FEEDBACK,RF AMP	8076108900
T5	TRANSFORMER,OUTPUT,PREDR	8076104904
T6	TRANSFORMER,INTERSTAGE,PREDR	8076104807
U1	IC LINEAR MAR-4	1010900005
U2	IC. LINEAR LM311N	1005760021
U3	IC DIGITAL 74HC238	1011430002
U4	IC. DIGITAL ULN2003A	1005630038
U5	IC. LINEAR MWA130	1010380036
U6	IC. DIGITAL ULN2003A	1005630038
U7	IC. LINEAR MWA130	1010380036
X1	MIXER, TAK-1H	1010400029
X2	MIXER, TAK-1H	1010400029
XQ5	HEATSINK, CUP CLIP, TO-5	1011440008
XQ6	HEATSINK, CUP CLIP, TO-5	1011440008
XQ7	HEATSINK, CUP CLIP, TO-5	1011440008
XQ8	HEATSINK, CUP CLIP, TO-5	1011440008
XQ9	HEATSINK, CUP CLIP, TO-5	1011440008
XQ10	HEATSINK, CUP CLIP, TO-5	1011440008
XQ11	HEATSINK, CUP CLIP, TO-5	1011440008
XU5	HEATSINK, CUP CLIP, T0-5	1011070014
XU7	HEATSINK, CUP CLIP, T0-5	1011070014
	MTG PLATE, FRONT END BD	8076101603
	SOCKET, LEAD	1011060019

Figure 5.8.14 PC Assembly, Front End 1A2A5, page 2/4.

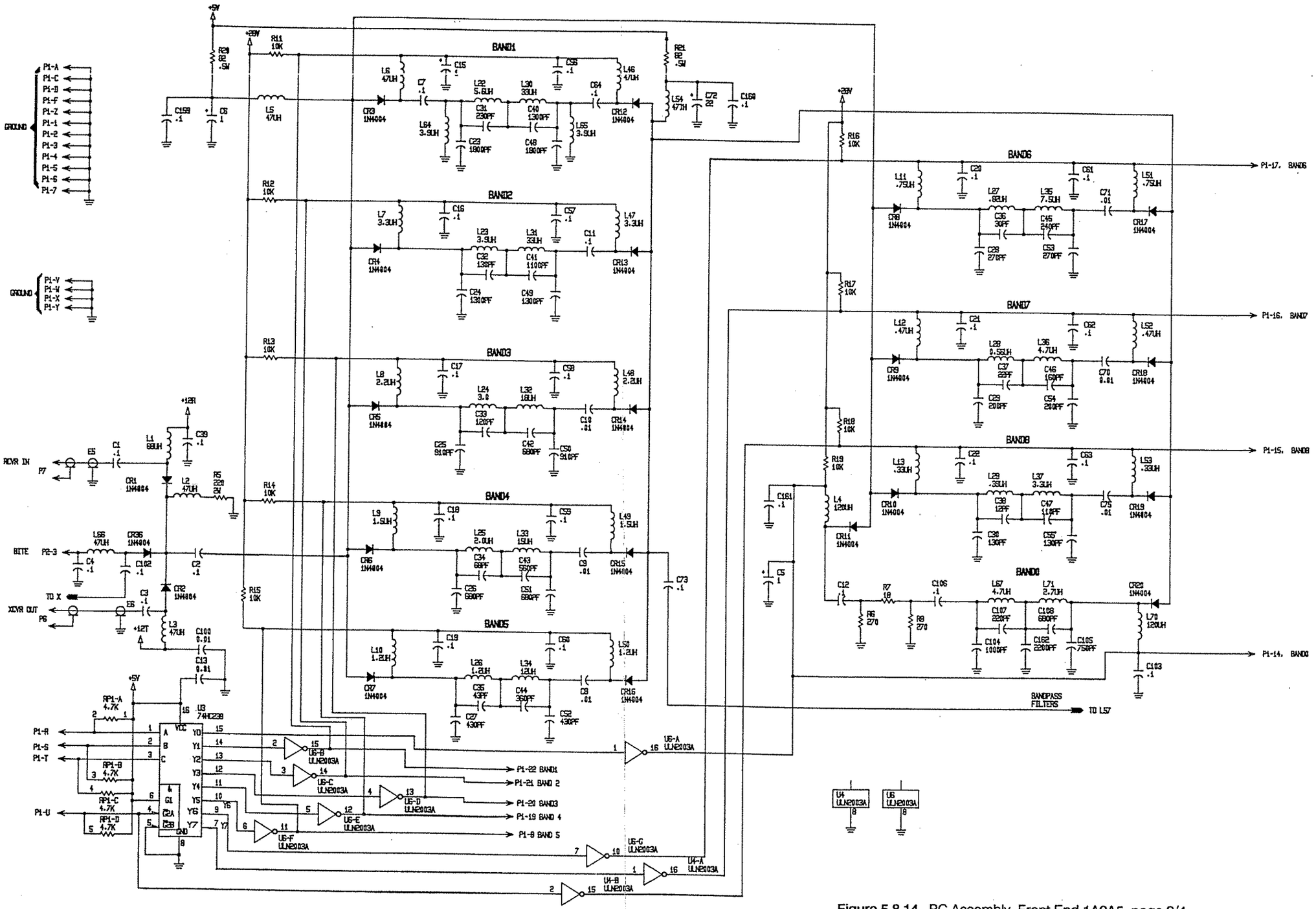

Figure 5.8.14 PC Assembly, Front End 1A2A5, page 3/4.

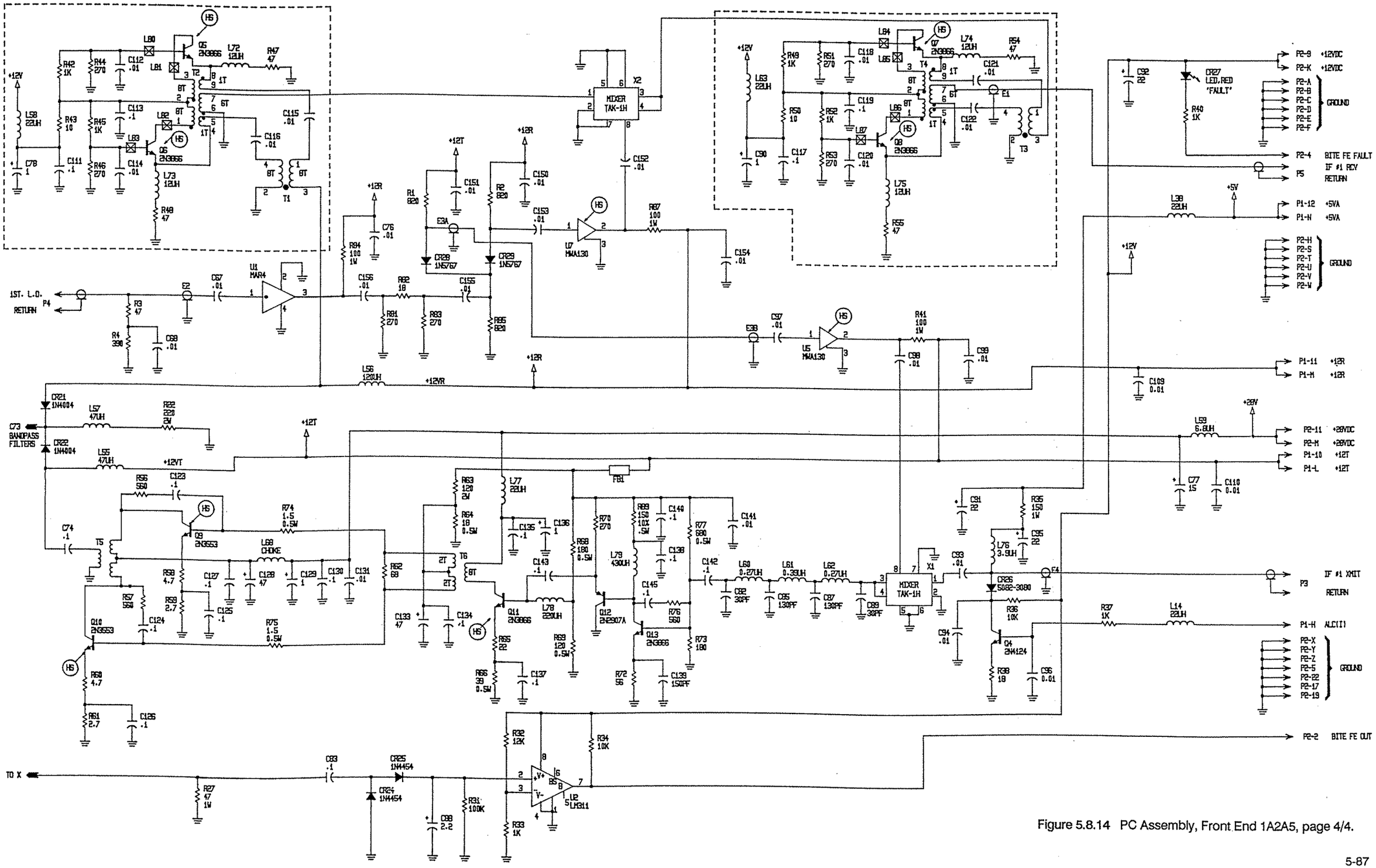

Figure 5.8.14 PC Assembly, Front End 1A2A5, page 4/4.

PC ASSY, REFERENCE DRIVER 1A2A6

	PC ASSY, REFERENCE DRIVER 1A2A6	8076120098
C1	CAP. .47µF, 50V, X7R 20%	0283377771
C2	CAP. .47µF, 50V, X7R 20%	0283377771
C3	CAP. .47µF, 50V, X7R 20%	0283377771
C4	CAP. .47µF, 50V, X7R 20%	0283377771
C5	CAP. .01µF, 50V, X7R 20%	0281730008
C6	CAP. .01µF, 50V, X7R 20%	0281730008
C7	CAP. .01µF, 50V, X7R 20%	0281730008
C8	CAP. .01µF, 50V, X7R 20%	0281730008
C9	CAP. .01µF, 50V, X7R 20%	0281730008
C10	CAP. .01µF, 50V, X7R 20%	0281730008
C11	CAP. 0.001µF, 100V, X7R, 20%	0281630003
C12	CAP. 22µF, 15V, T368	0296660001
CR1	DIODE, SIGNAL, SIL. 1N4454	0405270003
CR2	DIODE, SIGNAL, SIL. 1N4454	0405270003
CR3	DIODE, SIGNAL, SIL. 1N4454	0405270003
CR4	DIODE, SIGNAL, SIL. 1N4454	0405270003
CR5	DIODE, LED, AMBER PC MOUNT	1011480000
CR6	DIODE, LED, AMBER PC MOUNT	1011480000
CR7	DIODE, LED, AMBER PC MOUNT	1011480000
CR8	DIODE, SIGNAL, SIL. 1N4454	0405270003
CR9	DIODE, LED, RED, PC MOUNT	1008480029
L1	INDUCTOR, MOLDED, 47µH, 5%	0652680003
L2	INDUCTOR, MOLDED, 47µH, 5%	0652680003
Q1	TRANSISTOR, NPN, SI. 2N4124	0448010003
Q2	TRANSISTOR, PNP, SI 2N4126	0448020009
Q3	TRANSISTOR, NPN, SI. 2N4124	0448010003
Q4	TRANSISTOR, PNP, SI 2N4126	0448020009
R1	RESISTOR 47, 5%, 1/8W	1010804707
R2	RESISTOR 47, 5%, 1/8W	1010804707
R3	RESISTOR 1.8K, 5%, 1/8W	1010801821
R4	RESISTOR 22, 5%, 1/8W	1010802208
R5	RESISTOR 1.8K, 5%, 1/8W	1010801821
R6	RESISTOR 22, 5%, 1/8W	1010802208
R7	RESISTOR 2.2K, 5%, 1/8W	1010802224
R8	RESISTOR 10, 5%, 1/8W	1010801007
R9	RESISTOR 10, 5%, 1/8W	1010801007
R10	RESISTOR 2.2K, 5%, 1/8W	1010802224
R11	RESISTOR 390, 5%, 1/8W	1010803913
R12	RESISTOR 3.3K, 5%, 1/8W	1010803328
R13	RESISTOR 6.8K, 5%, 1/8W	1010806823
R14	RESISTOR 390, 5%, 1/8W	1010803913
R15	RESISTOR 1K, 5%, 1/8W	1010801023
R16	RESISTOR 560, 10%, 1/2W	0185900003
R17	RESISTOR 270, 10%, 1/4W	0178450006
R18	RESISTOR 4.7K, 5%, 1/8W	1010804723
R19	RESISTOR 5.6K, 5%, 1/8W	1010805622
R20	RESISTOR 10K, 5%, 1/8W	1010801031
U1	IC. LINEAR LM340T5	0448600005
U2	IC. DIGITAL 74HC14	1006490027
	HEADER, PIN STRIP, 8 PIN	1010700014
	SHIELD, CAN	8040051509
	SHUNT, 8 PIN, .100 SPACING	1010720015
	STANDOFF, M-F, 4-40 X. 500L	1011000008

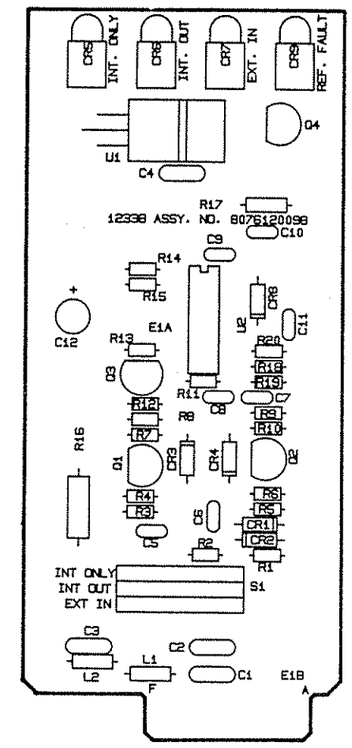

Figure 5.8.15 PC Assembly, Reference Driver 1A2A6, page 1/2.

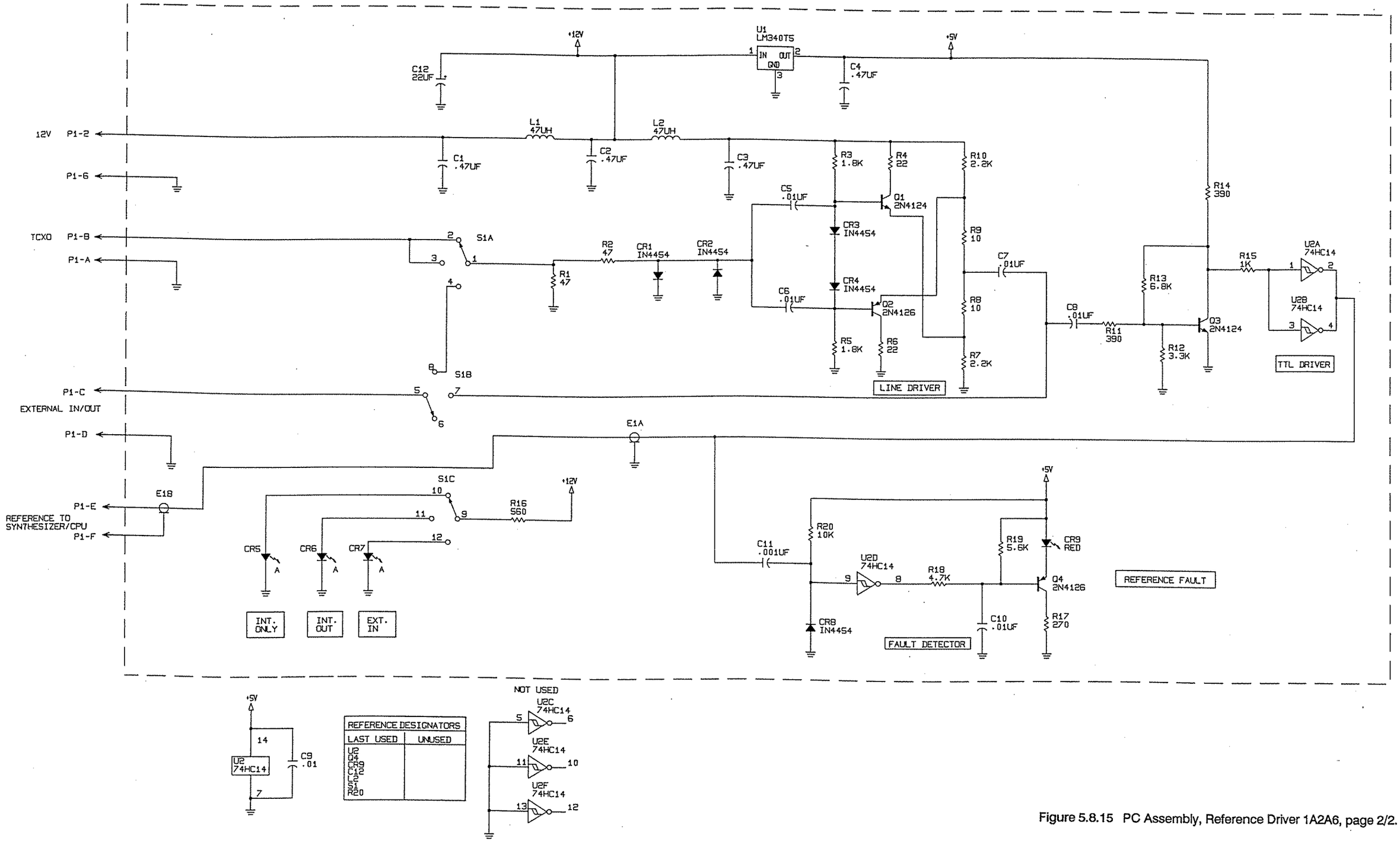

REFERENCE DESIGNATORS	
LAST USED	UNUSED
U2 Q4 CR9 C12 L2 S1 R20	

Figure 5.8.15 PC Assembly, Reference Driver 1A2A6, page 2/2.

THIS PAGE INTENTIONALLY LEFT BLANK.

PC ASSY, I/O BOARD 1A2A8

	PC ASSY, I/O BOARD 1A2A8	8076110092
C1	CAP. .01µF, 50V, X7R 20%	0281730008
C2	CAP. 6.8µF, 20V, T368	0296780006
C3	CAP. .01µF, 50V, X7R 20%	0281730008
C4	CAP. .01µF, 50V, X7R 20%	0281730008
C5	CAP. .01µF, 50V, X7R 20%	0281730008
C6	CAP. .01µF, 50V, X7R 20%	0281730008
C7	CAP. .01µF, 50V, X7R 20%	0281730008
C8	CAP. .01µF, 50V, X7R 20%	0281730008
C9	CAP. 22µF, 15V, 196D	0281690006
C10	CAP. 22µF, 15V, 196D	0281690006
C11	CAP. 47µF, 20V, 196D	0281700001
C12	CAP. .01µF, 50V, X7R 20%	0281730008
C13	CAP. .01µF, 50V, X7R 20%	0281730008
C14	CAP. .01µF, 50V, X7R 20%	0281730008
C15	CAP. 10µF, 20V	1007290005
C16	CAP. 22µF, 15V, 196D	0281690006
C17	CAP. 22µF, 15V, 196D	0281690006
C18	CAP. .01µF, 50V, X7R 20%	0281730008
C19	CAP. 47µF, 20V, 196D	0281700001
C20	CAP. .01µF, 50V, X7R 20%	0281730008
C21	CAP. .01µF, 50V, X7R 20%	0281730008
C22	CAP. .01µF, 50V, X7R 20%	0281730008
C23	CAP. .01µF, 50V, X7R 20%	0281730008
C24	CAP. .01µF, 50V, X7R 20%	0281730008
C25	CAP. .01µF, 50V, X7R 20%	0281730008
C26	CAP. .01µF, 50V, X7R 20%	0281730008
C27	CAP. .01µF, 50V, X7R 20%	0281730008
C28	CAP. .01µF, 50V, X7R 20%	0281730008
C29	CAP. .01µF, 50V, X7R 20%	0281730008
C30	CAP. .01µF, 50V, X7R 20%	0281730008
C31	CAP. .01µF, 50V, X7R 20%	0281730008
C32	CAP. .01µF, 50V, X7R 20%	0281730008
C33	CAP. .01µF, 50V, X7R 20%	0281730008
C34	CAP. .01µF, 50V, X7R 20%	0281730008
C35	CAP. .01µF, 50V, X7R 20%	0281730008
CR1	DIODE, LED, RED, PC MOUNT	1008480029
CR2	DIODE, RECTIFIER 1N4004	0405180004
CR3	DIODE, RECTIFIER 1N4004	0405180004
J1	CONNECTOR, POWER, 9 PIN FEMALE	1011090015
K1	RELAY, DPDT, 12VDC	1005090009
K2	RELAY, DPDT, 12VDC	1005090009
L1	INDUCTOR, MOLDED, 33µH, 5%	0659690004
L2	INDUCTOR, MOLDED, 33µH, 5%	0659690004
L3	INDUCTOR, MOLDED, 33µH, 5%	0659690004
L4	INDUCTOR, MOLDED, 33µH, 5%	0659690004
L5	INDUCTOR, MOLDED, 33µH, 5%	0659690004
L6	INDUCTOR, MOLDED, 33µH, 5%	0659690004
L7	INDUCTOR, MOLDED, 33µH, 5%	0659690004
L8	INDUCTOR, MOLDED, 33µH, 5%	0659690004
P1	CONNECTOR,HEADER 40 PIN	1010780000
P2	CONNECTOR, HEADER, 14 PIN MALE	1011210142
Q1	TRANSISTOR, NPN, SI. 2N4124	0448010003
Q2	TRANSISTOR, NPN, SI. 2N4124	0448010003
R1	RESISTOR 680, 10%, 1/4W	0176630007
R2	RESISTOR 100K, 10%, 1/4W	0170390004
R3	RESISTOR 10K, 10%, 1/4W	0170410005
R4	RESISTOR 10K, 10%, 1/4W	0170410005
R5	RESISTOR 10K, 10%, 1/4W	0170410005
R6	RESISTOR 100K, 10%, 1/4W	0170390004
R7	RESISTOR 10K, 10%, 1/4W	0170410005
R8	RESISTOR 10K, 5%, 1/8W	1010801031
R9	RESISTOR 10K, 5%, 1/8W	1010801031
R10	RESISTOR 82, 10%, 1/4W	0184610001
R11	RESISTOR 10K, 5%, 1/8W	1010801031
R12	RESISTOR 68, 5%, 1/8W	1010806807
R13	RESISTOR 68, 5%, 1/8W	1010806807
R14	RESISTOR 68, 5%, 1/8W	1010806807
R15	RESISTOR 68, 5%, 1/8W	1010806807
RP1	RES NTWK 10 PIN SIP 10K COM	1006130021
RP2	RES NTWK 10 PIN SIP 10K COM	1006130021
RP3	RES NTWK 10 PIN SIP 10K COM	1006130021
U1	CRYSTAL OSCILLATOR, 7.3728MHZ	1008850012
U2	IC, DIGITAL 74HC00	1008190004
U3	IC, DIGITAL 74HC00	1008190004
U4	IC. DIGITAL 4078B	1010460030
U5	IC. DIGITAL 74HC374	1006450033
U6	IC. DIGITAL 74HC374	1006450033
U7	IC. DIGITAL 74HC04	1010280023
U8	IC. DIGITAL 74HC32	1006470026
U9	IC. DIGITAL 2681	1008790010
U10	IC. DIGITAL 80C85A	1007400013
U11	IC. DIGITAL 74HC138	1006480013
U12	IC. DIGITAL 74HC125	1008810011
U13	IC. DIGITAL 74HC373	1006480030
U14	IC. DIGITAL 74HC32	1006470026
U15	IC. DIGITAL RAM UPD446D	1006430008
U16	IC. DIGITAL ICL232	1010510011
U17	IC. DIGITAL ICL232	1010510011
U18	IC. DIGITAL 75176	1011100011
U19	IC. DIGITAL 75176	1011100011
U20	EPROM, W/IO SOFTWARE RT9000	8076113296
XU9	SOCKET, IC, 40 PIN TAILLESS	1006620010
XU10	SOCKET, IC, 40 PIN TAILLESS	1006620010
XU20	SOCKET, IC, 28 PIN TAILLESS	1006620001
	FERRITE BEAD, 850 PERM	1010410032
	MOUNTING PLATE, I/O BOARD	8076111200

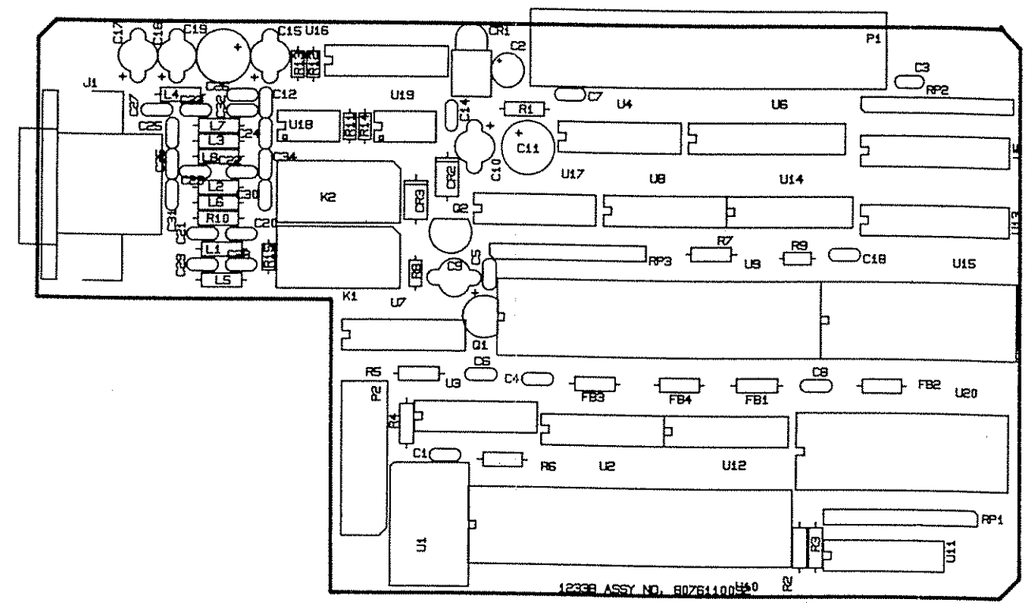

Figure 5.8.16 PC Assembly, I/O Board 1A2A8, page 1/3.

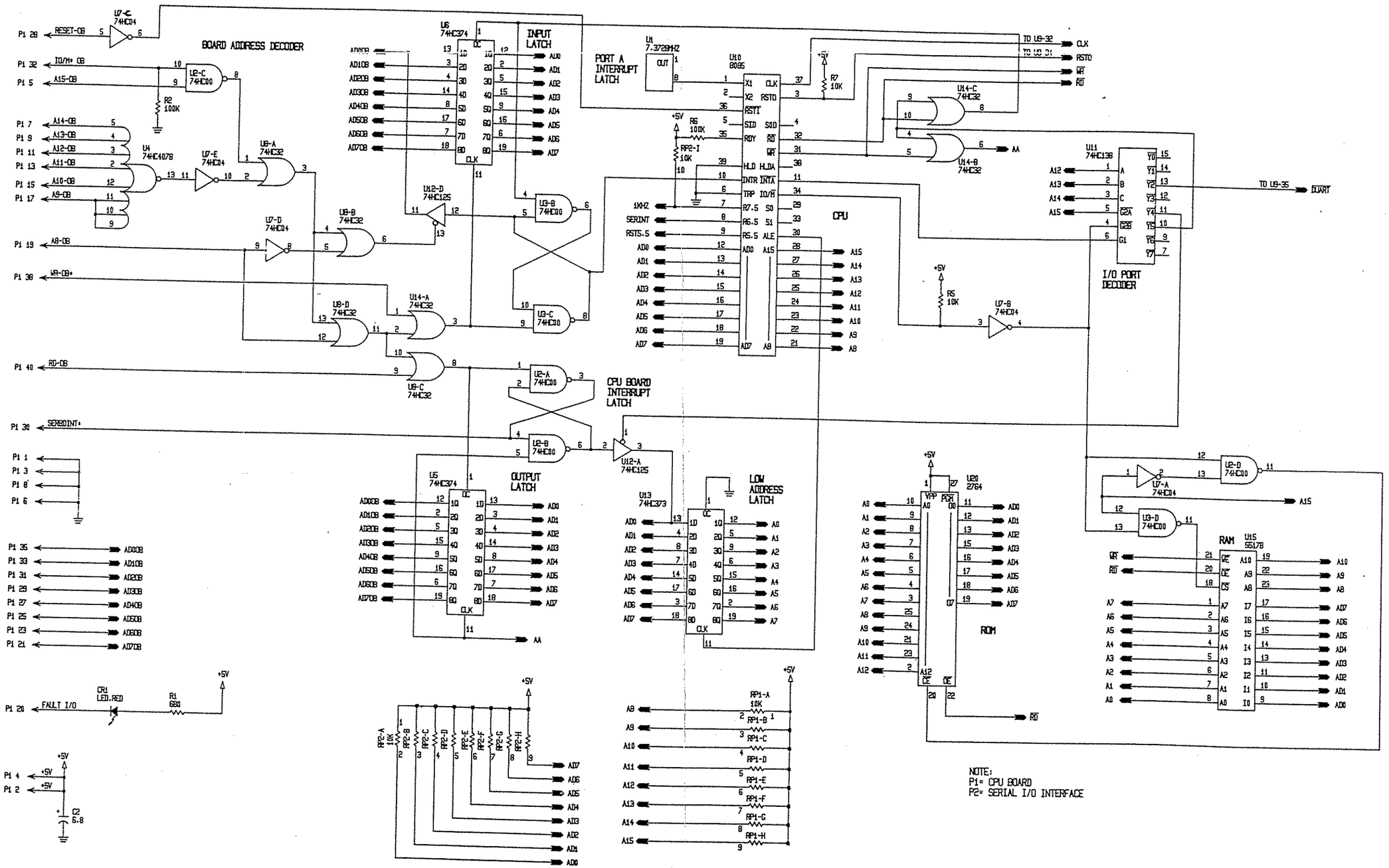

Figure 5.8.16 PC Assembly, I/O Board 1A2A8, page 2/3.

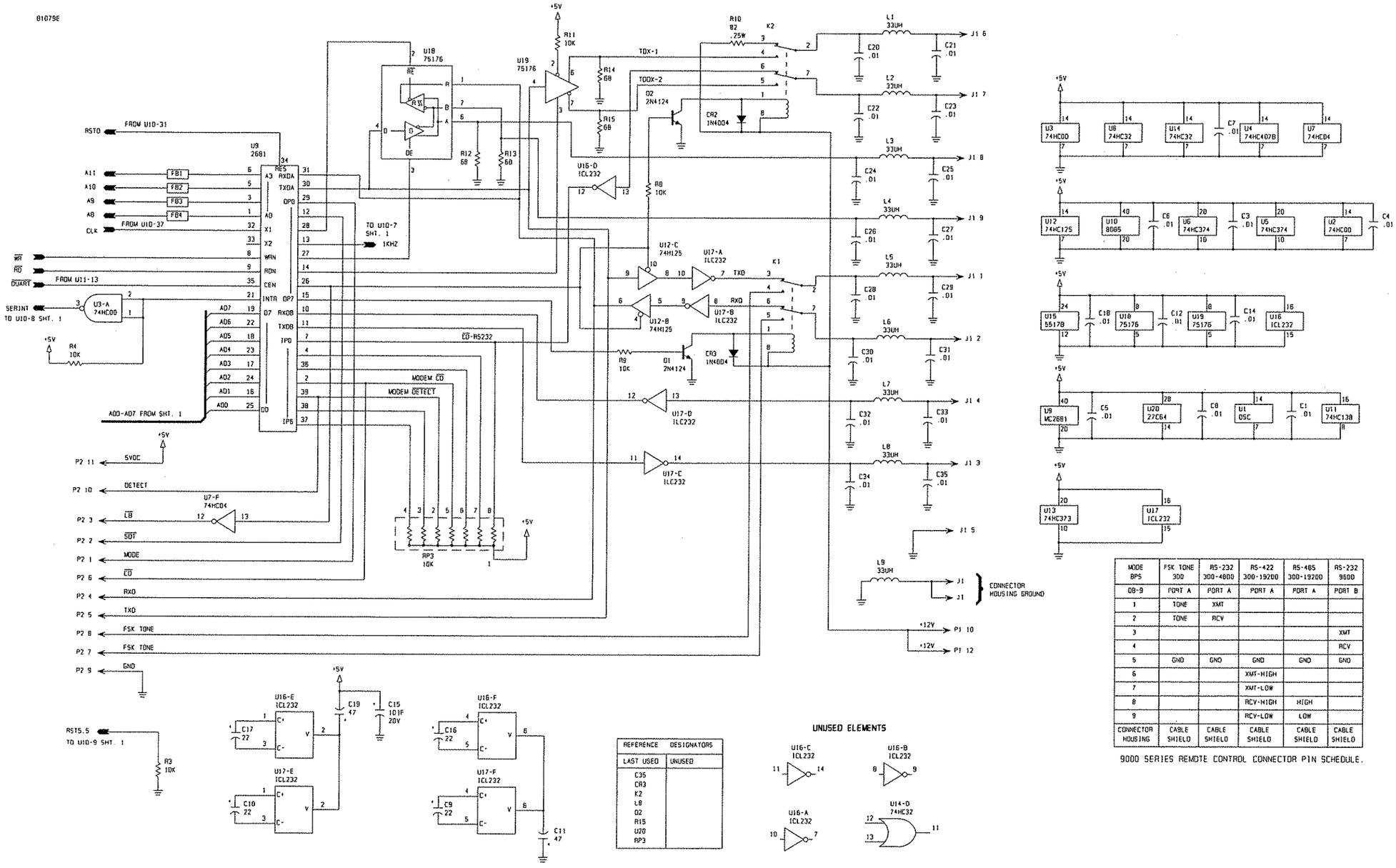

REFERENCE DESIGNATORS	
LAST USED	UNUSED
C35	
CR3	
K2	
L8	
Q2	
R15	
U20	
RP3	

MODE BPS	FSK TONE 300	RS-232 300-4800	RS-422 300-19200	RS-485 300-19200	RS-232 9600
DB-9	PORT A	PORT A	PORT A	PORT A	PORT B
1	TONE	XMT			
2	TONE	RCV			
3					XMT
4					RCV
5	GND	GND	GND	GND	GND
6			XMT-HIGH		
7			XMT-LOW		
8			RCV-HIGH	HIGH	
9			RCV-LOW	LOW	
CONNECTOR HOUSING	CABLE SHIELD	CABLE SHIELD	CABLE SHIELD	CABLE SHIELD	CABLE SHIELD

9000 SERIES REMOTE CONTROL CONNECTOR PIN SCHEDULE.

Figure 5.8.16 PC Assembly, I/O Board 1A2A8, page 3/3.

1159CP

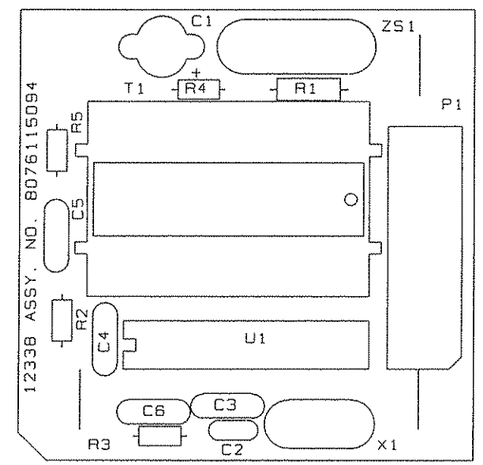

PC ASSY, FSK MODEM 1A2A8A1

	PC ASSY, FSK MODEM 3A2A3A1	8076115094
C1	CAP. 10µF, 20V	1007290005
C2	CAP. 0.001µF, 100V, X7R, 20%	0281630003
C3	CAPACITOR 0.1µF, 50V, X7R	1011180014
C4	CAPACITOR 0.1µF, 50V, X7R	1011180014
C5	CAPACITOR 0.1µF, 50V, X7R	1011180014
C6	CAPACITOR 0.1µF, 50V, X7R	1011180014
P1	CONNECTOR, RIBBON, 14 PIN FEM	1008350001
R1	RESISTOR 604, 1%, 1/8W	0193980002
R2	RESISTOR 5.6K, 5%, 1/8W	1010805622
R3	RESISTOR 10K, 5%, 1/8W	1010801031
R4	RESISTOR 10K, 5%, 1/8W	1010801031
R5	RESISTOR 10K, 5%, 1/8W	1010801031
T1	TRANSFORMER, MODEM	1011340011
U1	IC. DIGITAL MC145443	1011330016
X1	CRYSTAL, 3.579545 MHZ	1006270001
XP1	CONNECTOR,PCB,TRANSITION,14PIN	1011090147
ZS1	VARISTOR, MOV V230LA20A	1010720023
	CABLE, FLAT, 14 COND. 28AWG	1011170001

Figure 5.8.17 PC Assembly, FSK Modem 1A2A8A1, page 1/2.

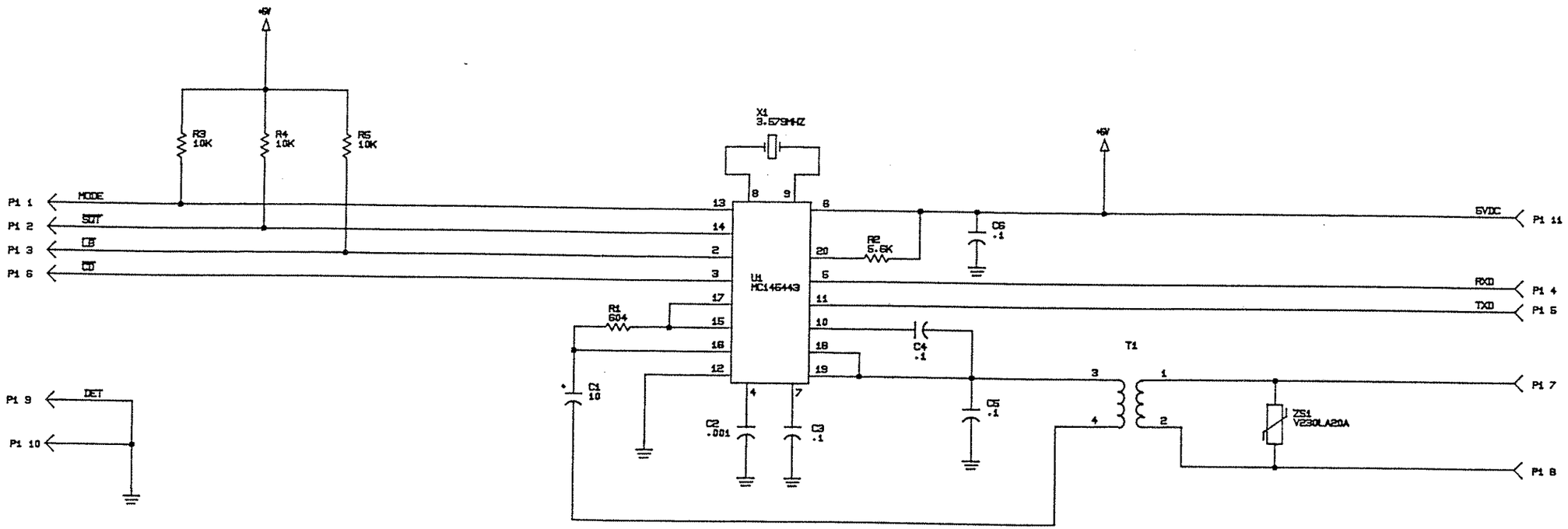

Figure 5.8.17 PC Assembly, FSK Modem 1A2A8A1, page 2/2.

THIS PAGE INTENTIONALLY LEFT BLANK.

FILTER ASSY 1A3

1A3	FILTER ASSY 1A3	8076050090
1A3A1	PC ASSY, DETECTOR	8076053099
1A3A2	PC ASSY, BANDS 1-4	8076057094
1A3A3	PC ASSY, BANDS 5-8	8076055091
	ENCLOSURE, FILTER MODULE	8076050502

Figure 5.8.18 Filter Assembly 1A3, page 1/1.

PC ASSY, DETECTOR 1A3A1

	PC ASSY, DETECTOR 1A3A1	8076053099
C1	CAP. 30 PF, 2KV, N750	1008230014
C2	CAP. 100PF 2KV N750	1008250031
C3	CAP. .01µF, 50V, X7R 20%	0281730008
C4	CAP. 30 PF, 2KV, N750	1008230014
C5	CAP. 30 PF, 2KV, N750	1008230014
C6	CAP. 30 PF, 2KV, N750	1008230014
C7	CAP. 30 PF, 2KV, N750	1008230014
C8	CAP. .01µF, 50V, X7R 20%	0281730008
C9	CAP. .01µF, 50V, X7R 20%	0281730008
C10	CAP. .01µF, 50V, X7R 20%	0281730008
C11	CAP. .01µF, 50V, X7R 20%	0281730008
C12	CAPACITOR, 0.1µF, 200V, X7R	1011190001
C13	CAPACITOR, 0.1µF, 200V, X7R	1011190001
C14	CAP. 1µF, 50V, 198D	0280910002
C15	CAP. 56 PF, 2KV, N750	1008240028
C16	CAP. 56 PF, 2KV, N750	1008240028
C17	CAP. 15-60PF, 200V, N1500	0252680006
C18	CAP. .01µF, 50V, X7R 20%	0281730008
C19	CAP. .01µF, 50V, X7R 20%	0281730008
C20	CAP. .01µF, 50V, X7R 20%	0281730008
CP1	CAPACITOR, NTWK, 10 PIN, .01µF	1006540016
CR1	DIODE, SIGNAL, SIL. 1N4454	0405270003
CR2	DIODE, SIGNAL, SIL. 1N4454	0405270003
CR3	DIODE, RECTIFIER 1N4004	0405180004
CR4	DIODE, PIN UM4001CR	0405440006
CR5	DIODE, PIN UM4001C	0405430001
CR6	DIODE, RECTIFIER 1N4004	0405180004
CR7	DIODE, RECTIFIER 1N4004	0405180004
CR8	DIODE, RECTIFIER 1N4004	0405180004
CR9	DIODE, SIGNAL, SIL. 1N4454	0405270003
CR10	DIODE, LED, RED	1004350023
DSP1	DIODE, LED, RED, BAR GRAPH	1010690019
J1	CONNECTOR, RF, JCM	0753600005
J2	CONNECTOR, RF, JCM	0753600005
J3	CONNECTOR, RF, SNAP-ON	1000170012
J5	CONNECTOR, HEADER, 26 PIN MALE	1011200261
K1	RELAY, SPST, 24VDC, PC MOUNT	1010310038
K2	RELAY, SPST, 24VDC, PC MOUNT	1010310038
L1	INDUCTOR, AIR WOUND, 303 NH	8076053501
L2	INDUCTOR, AIR WOUND, 303 NH	8076053501
P1A	CONNECTOR, RIBBON, 10 PIN FEM	1008070017
P1B	CONNECTOR, RIBBON, 10 PIN FEM	1008070017
P2	CONNECTOR, RIBBON, 10 PIN FEM	1008070017
Q1	TRANSISTOR, NPN, SI. 2N4124	0448010003
Q2	TRANSISTOR, NPN, SI. 2N4124	0448010003
R1	RESISTOR, 51, 5%, 1/4W	0197020003
R2	RESISTOR 10K, 10%, 1/4W	0170410005
R3	RESISTOR, 51, 5%, 1/4W	0197020003
R4	RESISTOR 10K, 10%, 1/4W	0170410005
R5	RESISTOR 4.7K, 5%, 1/4W	0170770001
R6	RESISTOR 10K, 10%, 1/4W	0170410005
R7	RESISTOR 4.7K, 5%, 1/4W	0170770001
R8	RESISTOR 10K, 10%, 1/4W	0170410005
R9	RESISTOR 12K, 10%, 1/4W	0183180003
R10	RESISTOR 4.7K, 10%, 2W	0164130004
R11	RESISTOR 1K, 10%, 1/4W	0171560001
R12	RESISTOR 180, 10%, 1/4W	0175220000

RP1	RES NTWK 10 PIN SIP 680 COM	1010640003
T1	TRANSFORMER, 20:1, DETECTOR	8076053706
T2	TRANSFORMER, 20:1, DETECTOR	8076053706
	CABLE, FLAT, 20 COND. 28AWG	1008080004
	CABLE, RIBBON, 10 CONDUCTOR	1008340014
	CONNECTOR,PCB,TRANSITION,10PIN	1011090104
	CONNECTOR,PCB,TRANSITION,20PIN	1011090201
	KEY, POLARIZING	1008070033

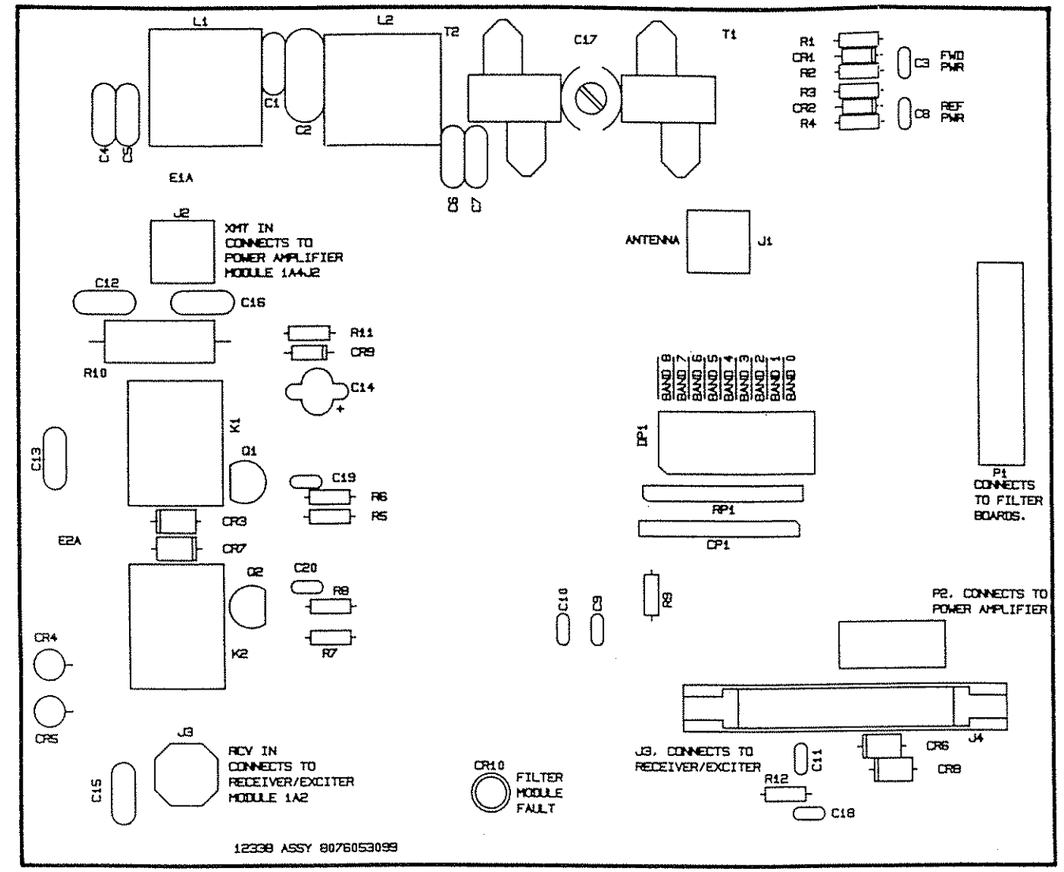

Figure 5.8.19 PC Assembly, Detector 1A3AL, page 1/2.

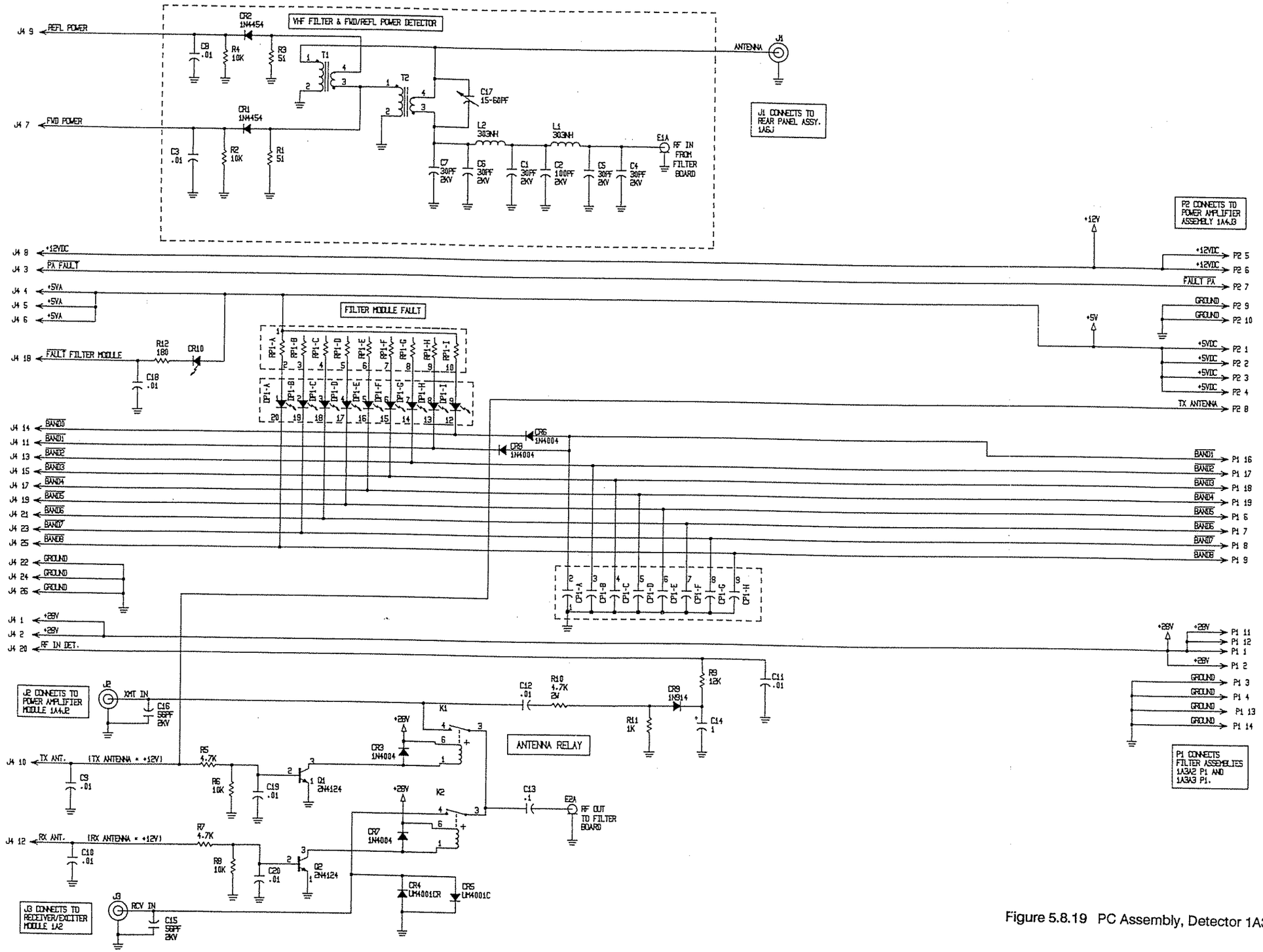

Figure 5.8.19 PC Assembly, Detector 1A3AL, page 2/2.

PC ASSY, BANDS 1-4 1A3A2

	PC ASSY, BANDS 1-4 1A3A2	8076057094
C57	CAP. 82 PF 2KV N750	1008270024
C58	CAP. 82 PF 2KV N750	1008270024
C59	CAP. 91 PF, 2KV N750	1008250023
C60	CAP. 300PF 2KV N750	1008470015
C61	CAP. 27 PF, 2KV, N750	1008230006
C62	CAP. 700PF, 500V, DM19, 5%	0249410001
C63	CAP. 120PF 2KV N750	1008260011
C64	CAP. 390PF, 500V, DM19, 2%	0282640002
C65	CAP. 33 PF, 2KV, N750	1008230022
C66	CAP. 700PF, 500V, DM19, 5%	0249410001
C67	CAP. 56 PF, 2KV, N750	1008240028
C68	CAP. 33 PF, 2KV, N750	1008230022
C69	CAP. 300PF 2KV N750	1008470015
C70	CAP. 130PF 2KV N750	1008260029
C71	CAP. 68 PF, 2KV N750	1008250007
C72	CAP. 180PF 2KV N750	1008270008
C73	CAP. 27 PF, 2KV, N750	1008230006
C74	CAP. 560PF, 500V, DM19, 2%	0281060002
C75	CAP. 800PF, 500V, DM19, 5%	0249530007
C76	CAP. 300PF 2KV N750	1008470015
C78	CAP. 430PF, 500V, DM19, 5%	0254900003
C79	CAP. 330PF 2KV N750	1008280038
C80	CAP. 800PF, 500V, DM19, 5%	0249530007
C81	CAP. 300PF 2KV N750	1008470015
C82	CAP. 91 PF, 2KV N750	1008250023
C83	CAP. 43PF 2KV N750	1008470023
C84	CAP. 330PF 2KV N750	1008280038
C85	CAP. 360PF, 500V, DM19, 2%	0282650008
C86	CAP. 150PF 2KV N750	1008260037
C87	CAP. 180PF 2KV N750	1008270008
C88	CAP. 430PF, 500V, DM19, 5%	0254900003
C89	CAP. 300PF 2KV N750	1008470015
C90	CAP. 910PF, 500V, DM19, 2%	0281450005
C91	CAP. 620PF, 500V, DM19, 5%	0299150003
C92	CAP. 430PF, 500V, DM19, 5%	0254900003
C93	CAP. 620PF, 500V, DM19, 5%	0299150003
C94	CAP. 910PF, 500V, DM19, 2%	0281450005
C95	CAP. 620PF, 500V, DM19, 5%	0299150003
C96	CAP. 130PF 2KV N750	1008260029
C97	CAP. 50 PF, 2KV, N750	1008240010
C98	CAP. 330PF 2KV N750	1008280038
C99	CAP. 600PF, 500V, DM19, 5%	0241850002
C100	CAP. 27 PF, 2KV, N750	1008230006
C101	CAP. 470PF, 500V, DM19, 5%	0255050003
C102	CAP. 390PF, 500V, DM19, 2%	0282640002
C103	CAP. 750PF, 500V, DM19, 2%	0280990006
C104	CAP. 270PF 2KV N750	1008280020
C105	CAP. 2000PF, 500V, DM19, 5%	0298500001
C106	CAP. 820PF, 500V, DM19, 2%	0281280002
C107	CAP. 750PF, 500V, DM19, 2%	0280990006
C108	CAP. 620PF, 500V, DM19, 5%	0299150003
C109	CAP. 1600PF, 500V, DM19, 2%	0281220000
C110	CAP. 200PF 2KV N750	1008270016
C111	CAP. 75 PF, 2KV N750	1008250015
C112	CAP. 820PF, 500V, DM19, 2%	0281280002
C113	CAP. 510PF, 500V, DM19, 2%	0282630007
CR5	DIODE, RECTIFIER 1N4004	0405180004

CR6	DIODE, RECTIFIER 1N4004	0405180004
CR7	DIODE, RECTIFIER 1N4004	0405180004
CR8	DIODE, RECTIFIER 1N4004	0405180004
CR15	DIODE, RECTIFIER 1N4004	0405180004
CR16	DIODE, RECTIFIER 1N4004	0405180004
CR17	DIODE, RECTIFIER 1N4004	0405180004
CR18	DIODE, RECTIFIER 1N4004	0405180004
K5	RELAY, SPST, 24VDC, PC MOUNT	1010310038
K6	RELAY, SPST, 24VDC, PC MOUNT	1010310038
K7	RELAY, SPST, 24VDC, PC MOUNT	1010310038
K8	RELAY, SPST, 24VDC, PC MOUNT	1010310038
K13	RELAY, SPST, 24VDC, PC MOUNT	1010310038
K14	RELAY, SPST, 24VDC, PC MOUNT	1010310038
K15	RELAY, SPST, 24VDC, PC MOUNT	1010310038
K16	RELAY, SPST, 24VDC, PC MOUNT	1010310038
L13	INDUCTOR, AIR WOUND, 634 NH	8076057507
L14	INDUCTOR, AIR WOUND, 729NH	8076057604
L15	INDUCTOR, TOROID, 1.43 μH	8076057701
L16	INDUCTOR, TOROID, 0.95 μH	8076057809
L17	INDUCTOR, TOROID, 1.18 μH	8076057906
L18	INDUCTOR, TOROID, 2.00 μH	8076058007
L19	INDUCTOR, TOROID, 1.47 μH	8076058104
L20	INDUCTOR, TOROID, 1.70 μH	8076058201
L21	INDUCTOR, TOROID, 2.74 μH	8076058309
L22	INDUCTOR, TOROID, 2.22 μH	8076058406
L23	INDUCTOR, TOROID, 2.52 μH	8076058503
L24	INDUCTOR, TOROID, 4.30 μH	8076058601
P4	CONNECTOR, HEADER, 10 PIN MALE	1011200104
	KEY, POLARIZING	1008070033

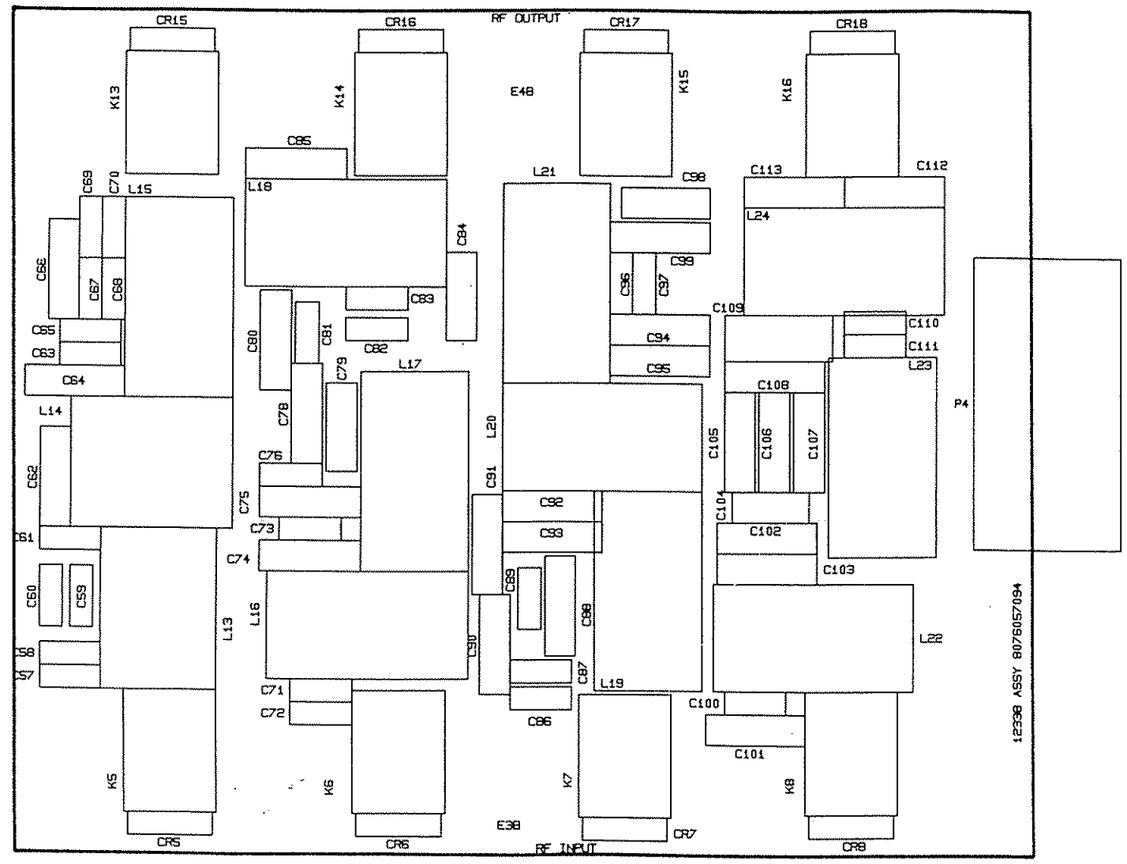

Figure 5.8.20 PC Assembly, Bands 1-4 1A3A2, page 1/2.

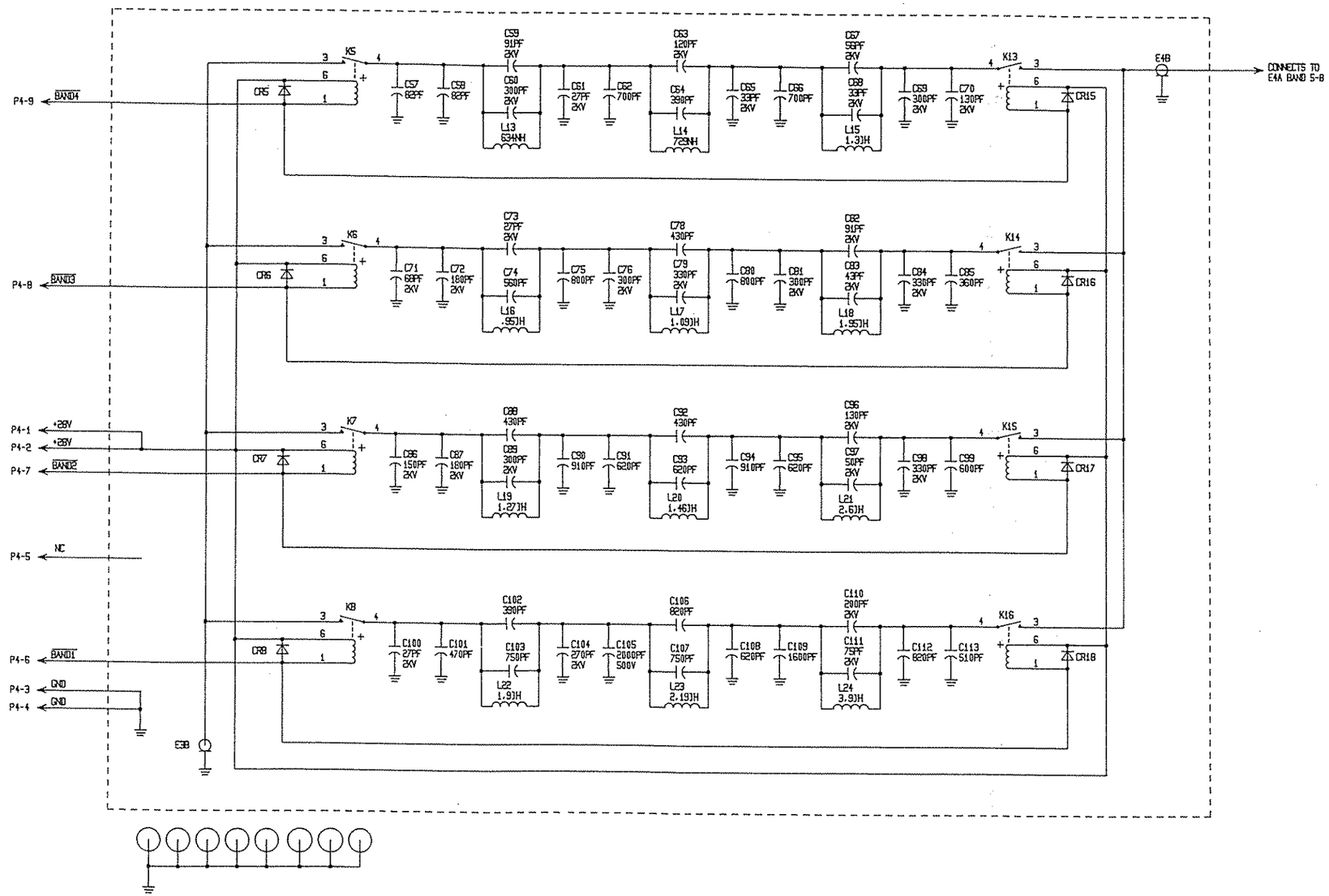

NOTE:
DIODES ARE 1N4004 UNLESS SPECIFIED

Figure 5.8.20 PC Assembly, Bands 1-4 1A3A2, page 2/2.

PC ASSY, BANDS 5-8 1A3A3

	PC ASSY, BANDS 5-8 1A3A3	8076055091
C2	CAP. 20 PF, 2KV, N750	1008220027
C3	CAP. 56 PF, 2KV, N750	1008240028
C4	CAP. 62 PF, 2KV, N750	1008240036
C5	CAP. 100PF 2KV N750	1008250031
C6	CAP. 100PF 2KV N750	1008250031
C7	CAP. 50 PF, 2KV, N750	1008240010
C8	CAP. 62 PF, 2KV, N750	1008240036
C9	CAP. 100PF 2KV N750	1008250031
C10	CAP. 100PF 2KV N750	1008250031
C11	CAP. 10 PF, 2KV, N750	1008210021
C12	CAP. 15 PF, 2KV, N750	1008220001
C13	CAP. 68 PF, 2KV N750	1008250007
C17	CAP. 50 PF, 2KV, N750	1008240010
C18	CAP. 100PF 2KV N750	1008250031
C19	CAP. 110PF 2KV N750	1008260002
C20	CAP. 110PF 2KV N750	1008260002
C21	CAP. 50 PF, 2KV, N750	1008240010
C22	CAP. 91 PF, 2KV N750	1008250023
C23	CAP. 62 PF, 2KV, N750	1008240036
C24	CAP. 150PF 2KV N750	1008260037
C25	CAP. 15 PF, 2KV, N750	1008220001
C26	CAP. 15 PF, 2KV, N750	1008220001
C28	CAP. 56 PF, 2KV, N750	1008240028
C31	CAP. 100PF 2KV N750	1008250031
C32	CAP. 56 PF, 2KV, N750	1008240028
C33	CAP. 56 PF, 2KV, N750	1008240028
C34	CAP. 270PF 2KV N750	1008280020
C35	CAP. 27 PF, 2KV, N750	1008230006
C36	CAP. 200PF 2KV N750	1008270016
C37	CAP. 56 PF, 2KV, N750	1008240028
C38	CAP. 270PF 2KV N750	1008280020
C39	CAP. 10 PF, 2KV, N750	1008210021
C40	CAP. 30 PF, 2KV, N750	1008230014
C42	CAP. 130PF 2KV N750	1008260029
C43	CAP. 30 PF, 2KV, N750	1008230014
C44	CAP. 75 PF, 2KV N750	1008250015
C45	CAP. 91 PF, 2KV N750	1008250023
C46	CAP. 150PF 2KV N750	1008260037
C47	CAP. 160PF 2KV N750	1008270032
C48	CAP. 330PF 2KV N750	1008280038
C49	CAP. 330PF 2KV N750	1008280038
C50	CAP. 27 PF, 2KV, N750	1008230006
C51	CAP. 160PF 2KV N750	1008270032
C52	CAP. 330PF 2KV N750	1008280038
C53	CAP. 30 PF, 2KV, N750	1008230014
C54	CAP. 30 PF, 2KV, N750	1008230014
C55	CAP. 160PF 2KV N750	1008270032
C56	CAP. 120PF 2KV N750	1008260011
CR1	DIODE, RECTIFIER 1N4004	0405180004
CR2	DIODE, RECTIFIER 1N4004	0405180004
CR3	DIODE, RECTIFIER 1N4004	0405180004
CR4	DIODE, RECTIFIER 1N4004	0405180004
CR11	DIODE, RECTIFIER 1N4004	0405180004
CR12	DIODE, RECTIFIER 1N4004	0405180004
CR13	DIODE, RECTIFIER 1N4004	0405180004
CR14	DIODE, RECTIFIER 1N4004	0405180004
K1	RELAY, SPST, 24VDC, PC MOUNT	1010310038
K2	RELAY, SPST, 24VDC, PC MOUNT	1010310038
K3	RELAY, SPST, 24VDC, PC MOUNT	1010310038
K4	RELAY, SPST, 24VDC, PC MOUNT	1010310038
K9	RELAY, SPST, 24VDC, PC MOUNT	1010310038
K10	RELAY, SPST, 24VDC, PC MOUNT	1010310038
K11	RELAY, SPST, 24VDC, PC MOUNT	1010310038
K12	RELAY, SPST, 24VDC, PC MOUNT	1010310038
L1	INDUCTOR, AIR WOUND, 102 NH	8076055504
L2	INDUCTOR, AIR WOUND, 147 NH	8076055601
L3	INDUCTOR, AIR WOUND, 221 NH	8076055709
L4	INDUCTOR, AIR WOUND, 153 NH	8076055806
L5	INDUCTOR, AIR WOUND, 221 NH	8076055709
L6	INDUCTOR, AIR WOUND, 384 NH	8076055903
L7	INDUCTOR, AIR WOUND, 282 NH	8076056004
L8	INDUCTOR, AIR WOUND, 324 NH	8076056101
L9	INDUCTOR, AIR WOUND, 577 NH	8076056209
L10	INDUCTOR, AIR WOUND, 423 NH	8076056306
L11	INDUCTOR, AIR WOUND, 486 NH	8076056403
L12	INDUCTOR, AIR WOUND, 866 NH	8076056501
P3	CONNECTOR, HEADER, 10 PIN MALE	1011200104
	KEY, POLARIZING	1008070033

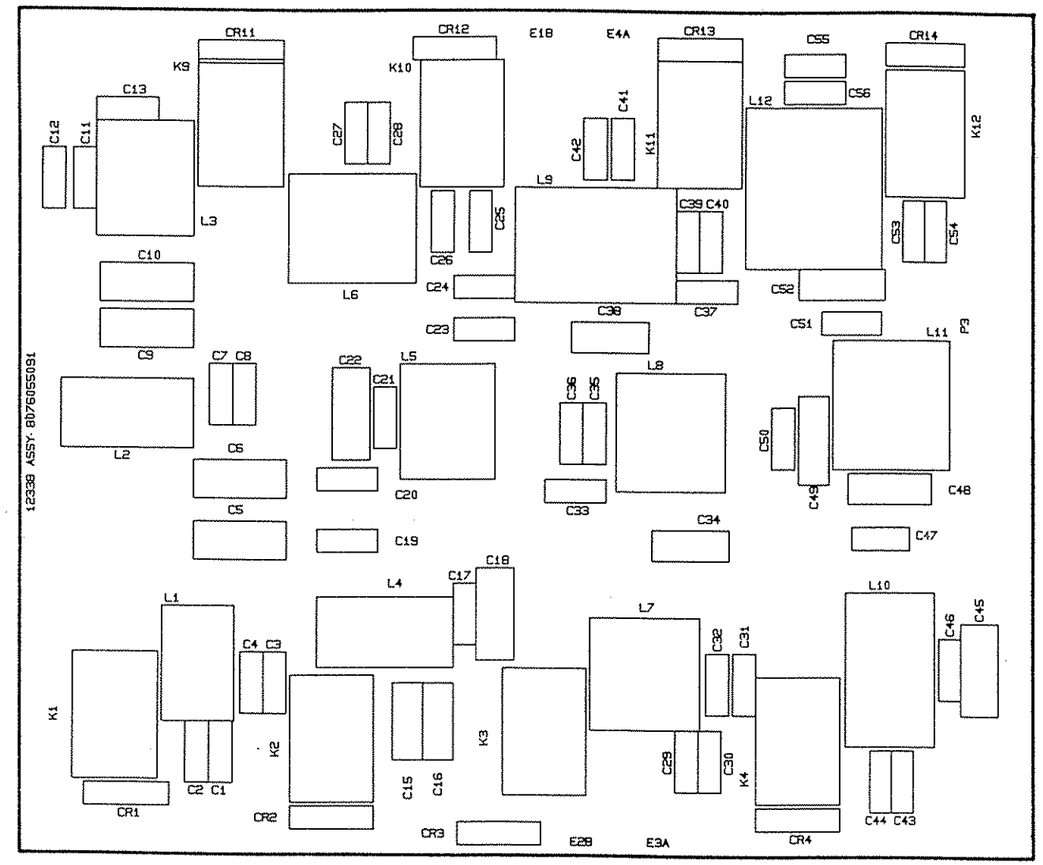

Figure 5.8.21 PC Assembly, Bands 5-8 1A3A3, page 1/2.

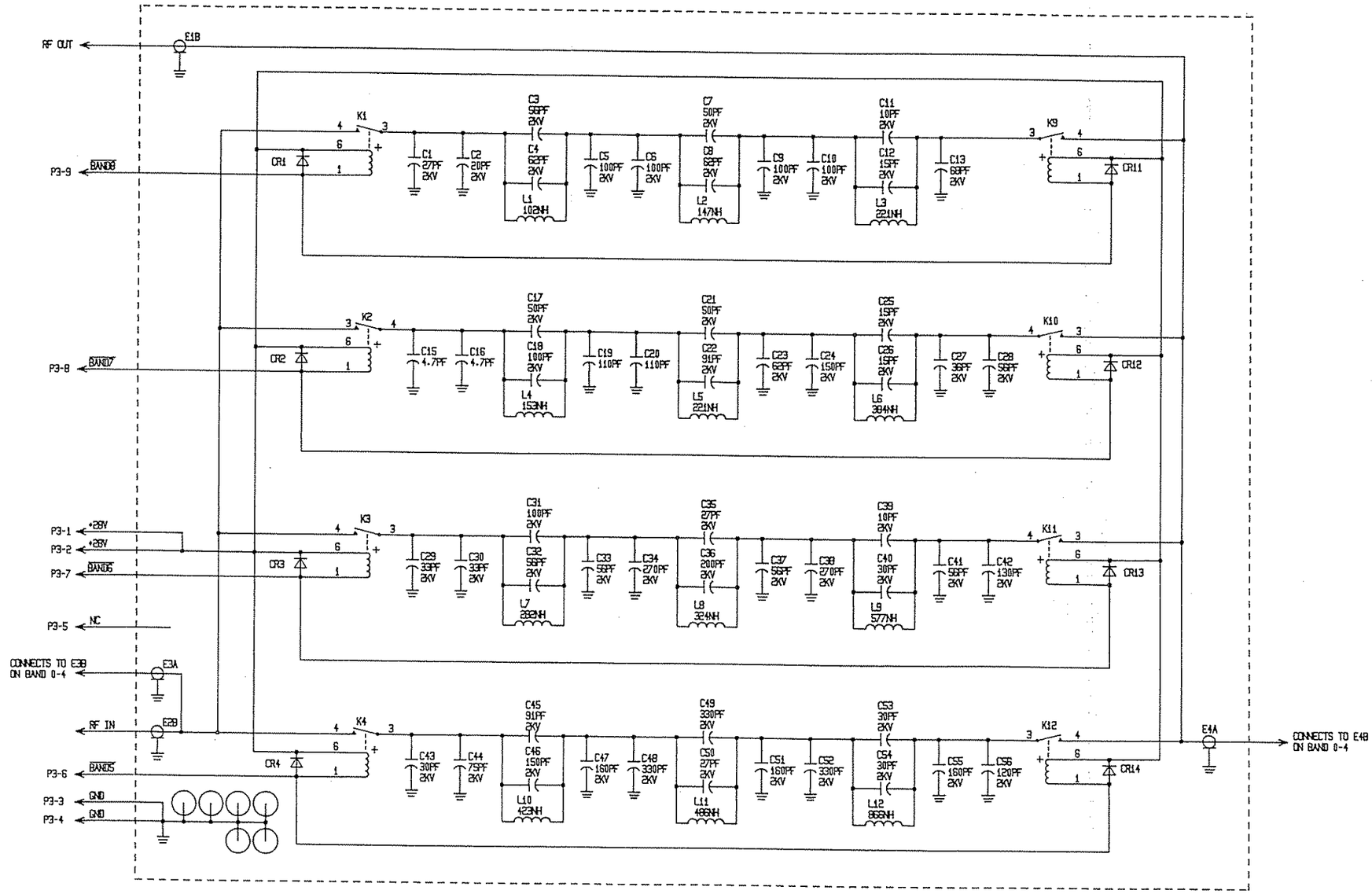

NOTE:
DIODES ARE 1N4004 UNLESS SPECIFIED

Figure 5.8.21 PC Assembly, Bands 5-8 1A3A3, page 2/2.

POWER AMPLIFIER ASSEMBLY 1A4

	POWER AMPLIFIER ASSEMBLY 1A4	8076030099
C1	CAP. 62PF, 500V, DM15, 2%	0282400001
C2	CAP. 270PF, 500V, DM15, 5%	0275030008
C3	CAP. 1800PF, 500V, DM19, 2%	0281300003
C4	CAP. 1800PF, 500V, DM19, 2%	0281300003
C5	CAP. 910PF, 100V, CD7, 5%	0288660005
C6	CAP. 0.1µF, 50V, X7R, 20%	0281610002
C7	CAP. 0.1µF, 50V, X7R, 20%	0281610002
C10	CAP. 1800PF, 500V, DM19, 2%	0281300003
C11	CAP. 1800PF, 500V, DM19, 2%	0281300003
C12	CAP. 1800PF, 500V, DM19, 2%	0281300003
C13	CAP. 1800PF, 500V, DM19, 2%	0281300003
C14	CAP. 0.1µF, 50V, X7R, 20%	0281610002
C15	CAP. 0.1µF, 50V, X7R, 20%	0281610002
C16	CAP. 0.1µF, 50V, X7R, 20%	0281610002
C17	CAP. 0.1µF, 50V, X7R, 20%	0281610002
C18	CAP. 0.1µF, 50V, X7R, 20%	0281610002
C20	CAP. 47PF, 500V, DM15, 2%	0282420002
C21	CAP. 0.1µF, 100V, Z5U, 20%	1008420026
C22	CAP. 0.1µF, 100V, Z5U, 20%	1008420026
C23	CAP. 0.1µF, 50V, X7R, 20%	0281610002
C24	CAPACITOR, 1000µF, 10V	1007160012
C25	CAP. 0.1µF, 50V, X7R, 20%	0281610002
C26	CAP. 0.1µF, 50V, X7R, 20%	0281610002
C27	CAP. 47µF, 35V	0282190007
C28	CAP. 0.001µF, 100V, X7R, 20%	0281630003
C29	CAPACITOR, 1000UF, 10V	1007160012
C30	CAP. 0.1µF, 50V, X7R, 20%	0281610002
C31	CAP. 47µF, 35V	0282190007
C32	CAP. 47µF, 35V	0282190007
C33	CAP. 910PF, 100V, CD7, 5%	0288660005
C34	CAP. 0.1µF, 50V, X7R, 20%	0281610002
C35	CAP. 0.1µF, 50V, X7R, 20%	0281610002
CR1	DIODE, RECTIFIER 1N4004	0405180004
CR2	DIODE, LED, RED	1004350023
J1	CONNECTOR, RF, SNAP-ON	1000170012
J3	CONNECTOR, HEADER, 10 PIN MALE	1011200104
L1	INDUCTOR, MOLDED, 0.15µH, 5%	0648620000
L2	INDUCTOR, MOLDED, 0.15µH, 5%	0648620000
L3	INDUCTOR, VK 200.10	1008310018
L4	INDUCTOR, AIRWOUND, 2 TURNS	8076032091
L5	INDUCTOR, AIRWOUND, 2 TURNS	8076032091
L6	INDUCTOR, AIRWOUND, 2 TURNS	8076032091
L7	INDUCTOR, AIRWOUND, 2 TURNS	8076032091
L8	INDUCTOR, L8,9	8076038090
L9	INDUCTOR, L8,9	8076038090
L10	INDUCTOR, VK 200.10	1008310018
L11	INDUCTOR, VK 200.10	1008310018
L12	INDUCTOR, VK 200.10	1008310018
L13	INDUCTOR, VK 200.10	1008310018
L14	INDUCTOR, VK 200.10	1008310018
L15	INDUCTOR, VK 200.10	1008310018
P1	TERMINAL, PC MOUNT, 3/16" MALE	1008550027
P2	TERMINAL, PC MOUNT, 3/16" MALE	1008550027
P3	TERMINAL, PC MOUNT, 1/4" MALE	1008330035
Q1	TRANSISTOR,NPN,SI MRF485	1010240030
Q2	TRANSISTOR,NPN,SI MRF485	1010240030
Q3	TRANSISTOR, NPN, SI.	0448170001

Q4	TRANSISTOR, NPN, SI.	0448170001
Q5	TRANSISTOR, NPN, SI.	0448170001
Q6	TRANSISTOR, NPN, SI.	0448170001
Q7	TRANSISTOR, PNP, SI MJE370	1010140035
Q8	TRANSISTOR, NPN, SI 2N4921	0448040000
Q9	TRANSISTOR, NPN,SI MPSA42	1010250035
Q10	TRANSISTOR, NPN,SI MJE13002	1010260031
R1	RESISTOR 12, 10%, 1/2W	0187080003
R2	RESISTOR 10, 10%, 1/2W	0185380000
R3	RESISTOR 10, 10%, 1/2W	0185380000
R4	RESISTOR 12, 10%, 1/2W	0187080003
R5	RESISTOR 82, 10%, 1/2W	1010200038
R6	RESISTOR 82, 10%, 1/2W	1010200038
R7	RESISTOR 3.9, 10%, 1W	1010210033
R8	RESISTOR 4.7, 10%, 1W	1010220039
R9	RESISTOR 4.7, 10%, 1W	1010220039
R10	RESISTOR 3.9, 10%, 1W	1010210033
R11	RESISTOR 3.9, 10%, 1W	1010210033
R12	RESISTOR 4.7, 10%, 1W	1010220039
R13	RESISTOR 4.7, 10%, 1W	1010220039
R14	RESISTOR 3.9, 10%, 1W	1010210033
R15	RESISTOR 6.8, 10%, 1W	1010230034
R16	RESISTOR 6.8, 10%, 1W	1010230034
R17	RESISTOR 6.8, 10%, 1W	1010230034
R18	RESISTOR 6.8, 10%, 1W	1010230034
R19	RESISTOR, STRIPLINE, 18, 20W	1010150031
R20	RESISTOR, STRIPLINE, 18, 20W	1010150031
R21	RESISTOR 100, 5%, 1/4W	0171180003
R22	POT. 100, 10% 1/2W, PC MOUNT	0346350000
R23	RESISTOR 47, 10%, 1W	0164990003
R24A	RESISTOR, 0.47, 10%, 1/2W	1010390031
R25	RESISTOR 1K, 10%, 1/4W	0171560001
R26	RESISTOR 18K, 10%, 1/4W	0175720002
R27	RESISTOR 6.8K, 5%, 1/4W	0174810008
R28	POT. 100, 10% 1/2W, PC MOUNT	0346350000
R29	RESISTOR 470, 5%, 1/4W	0184110009
R35	RESISTOR 3.9K, 10%, 1/4W	0178830003
R36	RESISTOR 270, 10%, 1/4W	0178450006
T1	TRANSFORMER, T1	8076033098
T2	TRANSFORMER, T2	8076034094
T3	TRANSFORMER, T3,4	8076035091
T4	TRANSFORMER, T3,4	8076035091
T5	TRANSFORMER, T5	8076036097
T6	TRANSFORMER, T6	8076037093
U1	IC. LINEAR MC1723L	1010270036
	BUSHING/INSULATING, TO-220AB P/O Q8	1008380024
	CLIP, SPRING, PA	8076030803
	CONNECTOR, RF, RIGHT ANGLE	1010890018
	HEATSINK, MACHINED, PA	8076031401
	INSULATOR/MICA,TO-220AB P/OQ1,Q2,Q8	0448670003
	LUG, SOLDER, PLAIN NO. 6	0532890001
	SPACER, .171 ID,.250 OD, .375L	0509030009

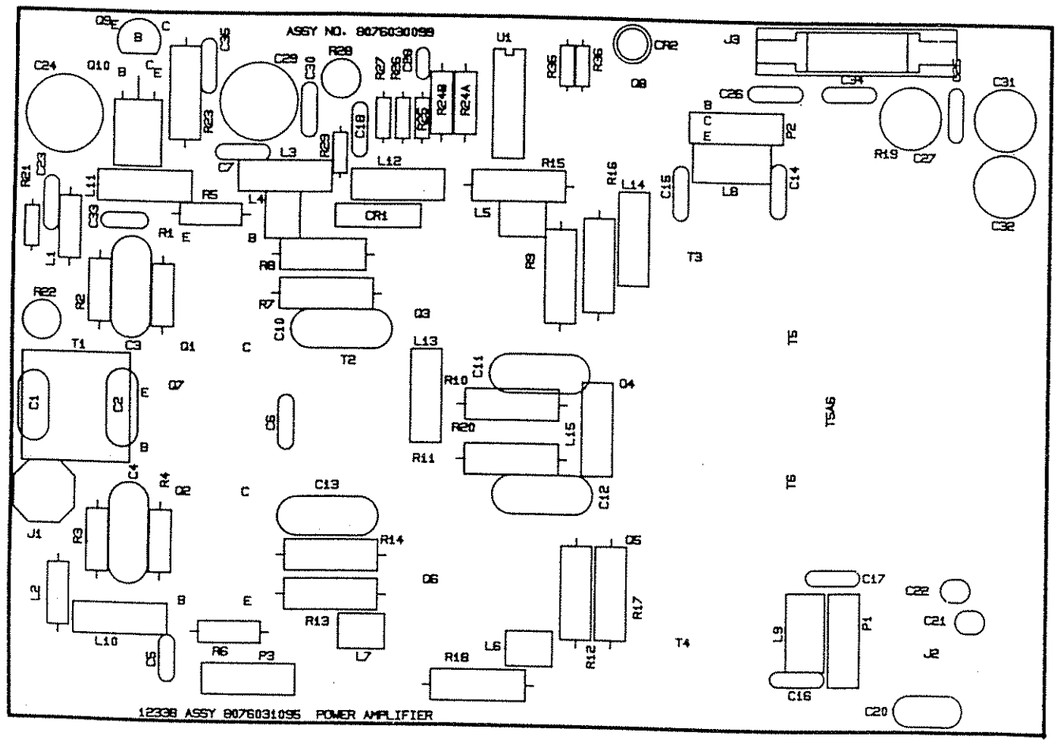

Figure 5.8.22 Power Amplifier Assembly, 1A4, page 1/2.

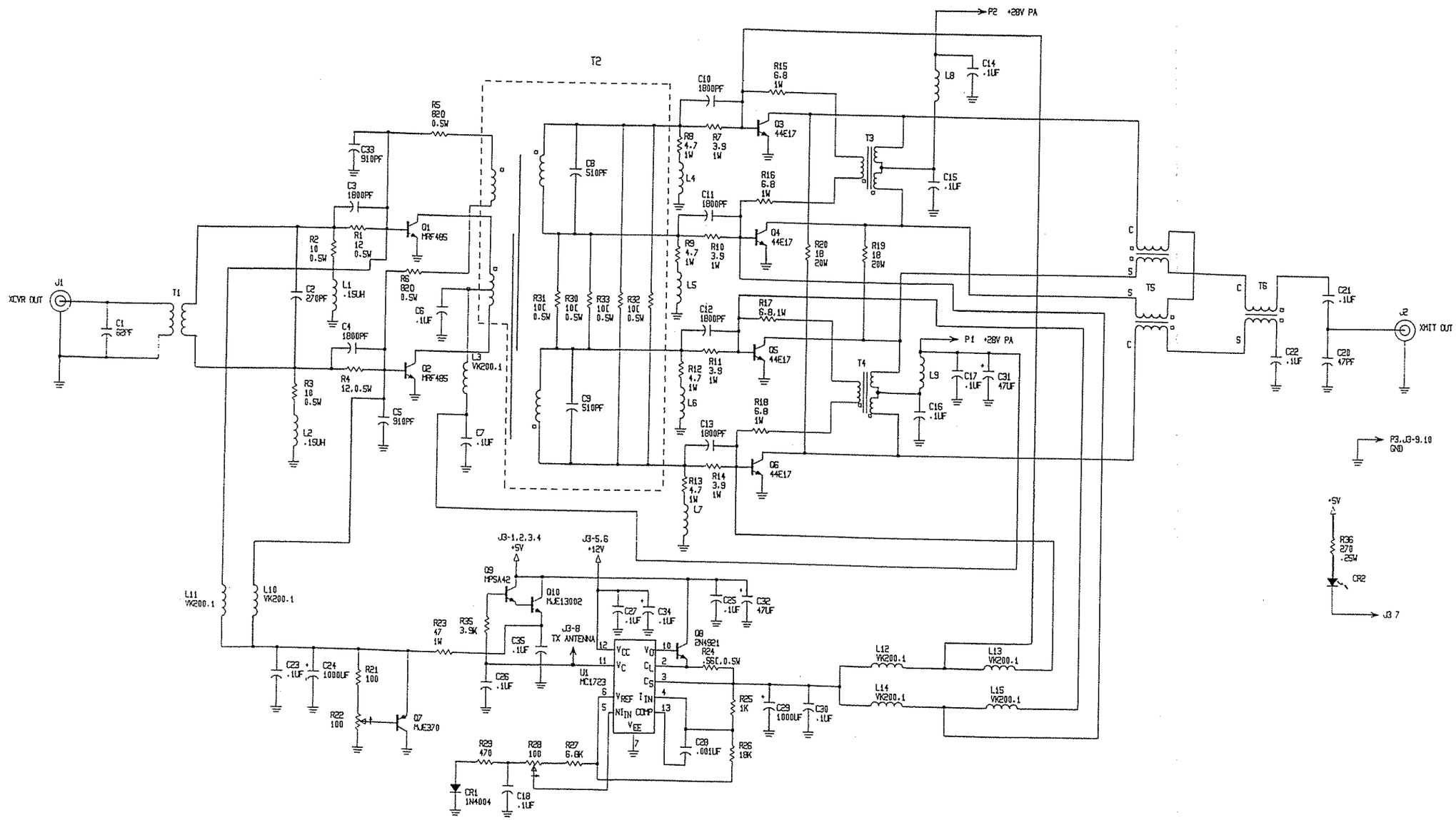

Figure 5.8.22 Power Amplifier Assembly, 1A4, page 2/2.

THIS PAGE INTENTIONALLY LEFT BLANK.

POWER SUPPLY ASSEMBLY, 28VDC 1A5A1

	POWER SUPPLY ASSY, 28VDC 1A5A1	8103020095
	CHASSIS, POWER SUPPLY	8076020701
1A5A1A1	PC ASSY. SWITCHING REGULATORS	8103022098
1A5A1A2	PC ASSY CONTROL LOGIC, DC/PS	8076024099
	RESISTOR, .05, 1% 25W	1008390003

Figure 5.8.23 Power Supply Assembly 1A5A1, page 1/1.

PC ASSY, SWITCHING REGULATORS 1A5A1A1

	PC ASSY, SWITCHING REG 1A5A1A1	8103022098
C1	CAP. .47µF, 50V, X7R 20%	0283377771
C2	CAP. 1000µF, 63V, 20%, 105C	1011350009
C3	CAP. 1000µF, 63V, 20%, 105C	1011350009
C4	CAP. 0.1µF, 50V, X7R, 20%	0281610002
C5	CAP. .01µF, 50V, X7R 20%	0281730008
C6	CAP. .47µF, 50V, X7R 20%	0283377771
C7	CAP. .47µF, 50V, X7R 20%	0283377771
C8	CAP. .47µF, 50V, X7R 20%	0283377771
C9	CAP. .01µF, 50V, X7R 20%	0281730008
C10	CAP. 1µF, 35V, 196D	0281660000
C11	CAP. 1000µF, 63V, 20%, 105C	1011350009
C12	CAP. 1000µF, 63V, 20%, 105C	1011350009
C13	CAP. 0.1µF, 50V, X7R, 20%	0281610002
C14	CAP. 6.8µF, 50V, T350	1008980013
C15	CAP. .47µF, 50V, X7R 20%	0283377771
C16	CAP. 0.1µF, 50V, X7R, 20%	0281610002
C17	CAP. 1000µF, 63V, 20%, 105C	1011350009
C18	CAP. 1000µF, 63V, 20%, 105C	1011350009
C19	CAP. 6.8µF, 50V, T350	1008980013
C20	CAP. 0.1µF, 50V, X7R, 20%	0281610002
C21	CAP. .01µF, 50V, X7R 20%	0281730008
C22	CAP. .47µF, 50V, X7R 20%	0283377771
C23	CAP. .47µF, 50V, X7R 20%	0283377771
C24	CAP. .47µF, 50V, X7R 20%	0283377771
C25	CAP. .01µF, 50V, X7R 20%	0281730008
C26	CAP. 1000µF, 63V, 20%, 105C	1011350009
C27	CAP. 1000µF, 63V, 20%, 105C	1011350009
C28	CAP. 6.8µF, 50V, T350	1008980013
C29	CAP. .47µF, 50V, X7R 20%	0283377771
C30	CAP. 0.1µF, 50V, X7R, 20%	0281610002
C31	CAP. 1000µF, 63V, 20%, 105C	1011350009
C32	CAP. .47µF, 50V, X7R 20%	0283377771
C33	CAP. 1000µF, 63V, 20%, 105C	1011350009
C34	CAP. 0.1µF, 50V, X7R, 20%	0281610002
C35	CAP. 0.1µF, 50V, X7R, 20%	0281610002
C36	CAP. .01µF, 50V, X7R 20%	0281730008
C37	CAP. .47µF, 50V, X7R 20%	0283377771
C38	CAP. .47µF, 50V, X7R 20%	0283377771
C39	CAP. .47µF, 50V, X7R 20%	0283377771
C41	CAP. 6.8µF, 50V, T350	1008980013
C42	CAP. .01µF, 50V, X7R 20%	0281730008
C43	CAP. 1000µF, 63V, 20%, 105C	1011350009
C44	CAP. 1000µF, 63V, 20%, 105C	1011350009
C45	CAP. .22µF, 35V, T368	0283510005
C46	CAP. 6.8µF, 50V, T350	1008980013
C47	CAP. 6.8µF, 50V, T350	1008980013
C48	CAP. 6.8µF, 50V, T350	1008980013
C49	CAP. 6.8µF, 50V, T350	1008980013
C50	CAP. .01µF, 50V, X7R 20%	0281730008
CR1	DIODE, RECTIFIER 1N4004	0405180004
CR2	DIODE, ZENER 1N5245B	0405210001
CR3	DIODE, RECTIFIER 1N4004	0405180004
CR4	DIODE, TRANSZORB 1N6423A	1011260000
CR6	DIODE, ZENER 1N5353B	0405140002
CR7	DIODE, RECTIFIER 1N4004	0405180004
F1	FUSE, MDL, 1 AMP, 250V	0841100004
J1	CONNECTOR, HEADER, 26 PIN MALE	1011200261

J2	CONNECTOR, HEADER 14 PIN MALE	1011200147
K1	RELAY, SPST, 24V	1008590029
K2	RELAY, SPDT, 24V, REED	1003400001
L1	INDUCTOR, CHOKE, 47µH	1008990019
L2	INDUCTOR, CHOKE 40µH, 20%	1010970003
L3	INDUCTOR, CHOKE 40µH, 20%	1010970003
L4	INDUCTOR, POWER, 180µH	1008690015
L5	INDUCTOR, CHOKE 40µH, 20%	1010970003
L6	INDUCTOR, CHOKE 40µH, 20%	1010970003
L8	INDUCTOR, POWER, 180µH	1008690015
L9	INDUCTOR, CHOKE 40µH, 20%	1010970003
L10	INDUCTOR, CHOKE 40µH, 20%	1010970003
L11	INDUCTOR, POWER, 180µH	1008690015
Q1	DIODE, TRASZORB LDTS30A	1010980009
Q2	DIODE, SCR C106A2	0447070002
Q3	TRANSISTOR, NPN, SI. 2N4124	0448010003
Q4	DIODE, SCR C106A2	0447070002
Q5	TRANSISTOR, PNP, SI. 2N4249	0446780006
Q6	DIODE, SCR C106A2	0447070002
Q7	TRANSISTOR, P-CH FET MTP20P06	1010960008
Q8	TRANSISTOR, NPN, S1. 2N3700	1008500038
R1	RESISTOR 3, 5% 3W	1004600003
R2	RESISTOR 36.5K, 1%, 1/8W	1004050011
R3	RESISTOR 5.6K, 10%, 1/4W	0183060008
R4	RESISTOR 1K, 10%, 1/4W	0171560001
R5	RESISTOR 10K, 10%, 1/4W	0170410005
R6	RESISTOR 1K, 10%, 1/4W	0171560001
R7	RESISTOR 1.2, 10%, 2W	0186290004
R8	RESISTOR 301, 1%, 1/8W	0194150003
R9	RESISTOR 1.8K, 10%, 1/4W	0178190004
R10	RESISTOR 5.6K, 10%, 1/4W	0183060008
R11	RESISTOR 1K, 10%, 1/4W	0171560001
R12	RESISTOR 1.2, 10%, 2W	0186290004
R13	RESISTOR 1.8K, 10%, 1/4W	0178190004
R14	RESISTOR 3.3K, 10%, 1/4W	0170890007
R15	RESISTOR 470, 5%, 1/4W	0184110009
R16	RESISTOR 820, 10%, 1/2W	0175600007
R17	RESISTOR 1, 5%, 10W	0169680002
R18	RESISTOR 150, 5%, 3W	0160110009
R19	RESISTOR 301, 1%, 1/8W	0194150003
R20	RESISTOR 100K, 10%, 1/4W	0170390004
R21	RESISTOR 1K, 10%, 1/4W	0171560001
R22	RESISTOR 470, 5%, 1/4W	0184110009
R23	RESISTOR 2.7K, 10%, 1/4W	0186670001
R24	RESISTOR 10K, 10%, 1/4W	0170410005
R25	RESISTOR 100, 10%, 1/2W	0174790007
U1	IC. LINEAR LSH6335P	1010930001
U2	IC. LINEAR LSH6335P	1010930001
U3	IC. DIGITAL 2501-4	1010630008
U4	IC. LINEAR LM340T5	0448600005
U5	IC. LINEAR LSH6335P	1010930001
	CONNECTOR, PC, 6 PIN HEADER	1010830015
	CONNECTOR, HOUSING, 10 PIN,FEM	1010850016
	FUSECLIP, PC MOUNT	0534610005
	KEY, POLARIZING	1008070033
	SHIELD, POWER CHOKE,MU METAL	8076022401

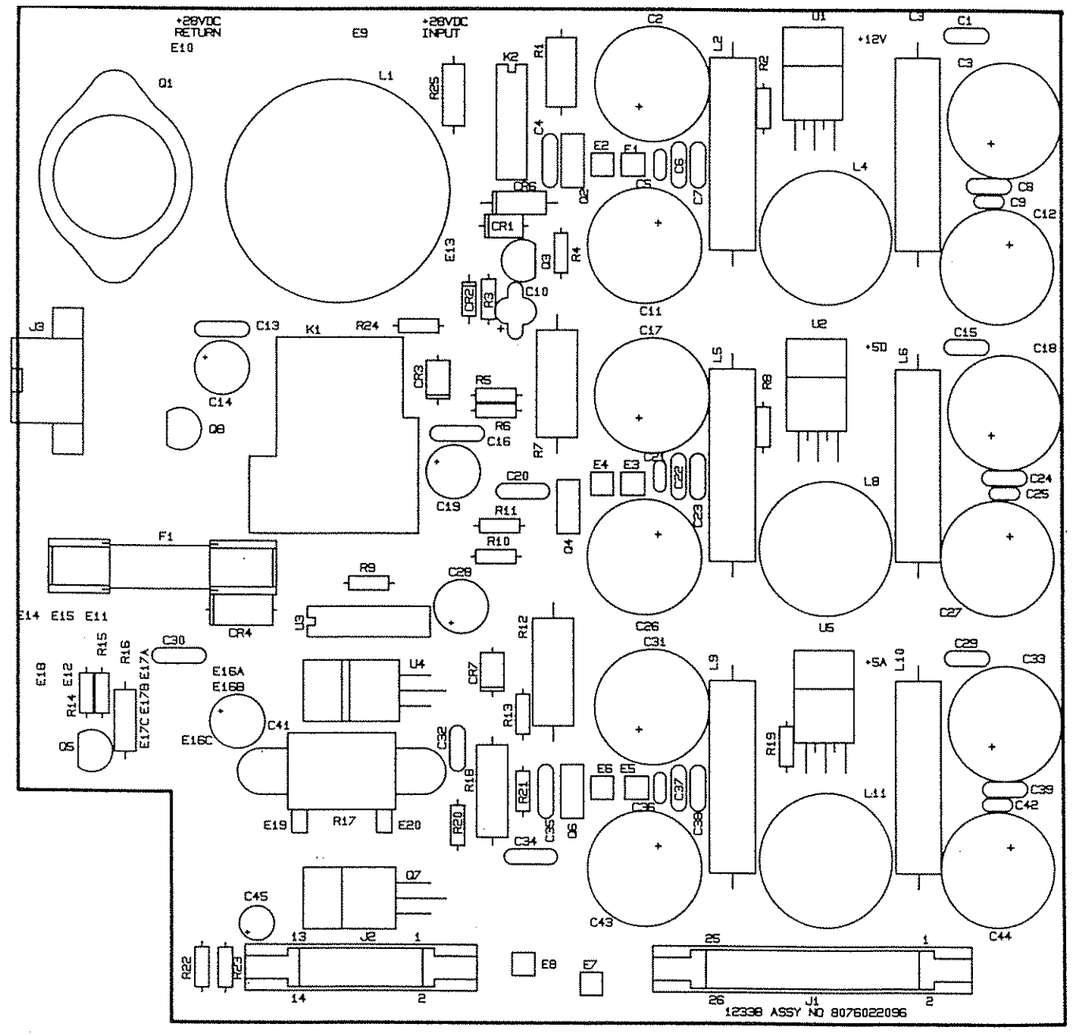

Figure 5.8.24 PC Assembly, Switching Regulators 1A5A1A1, page 1/2.

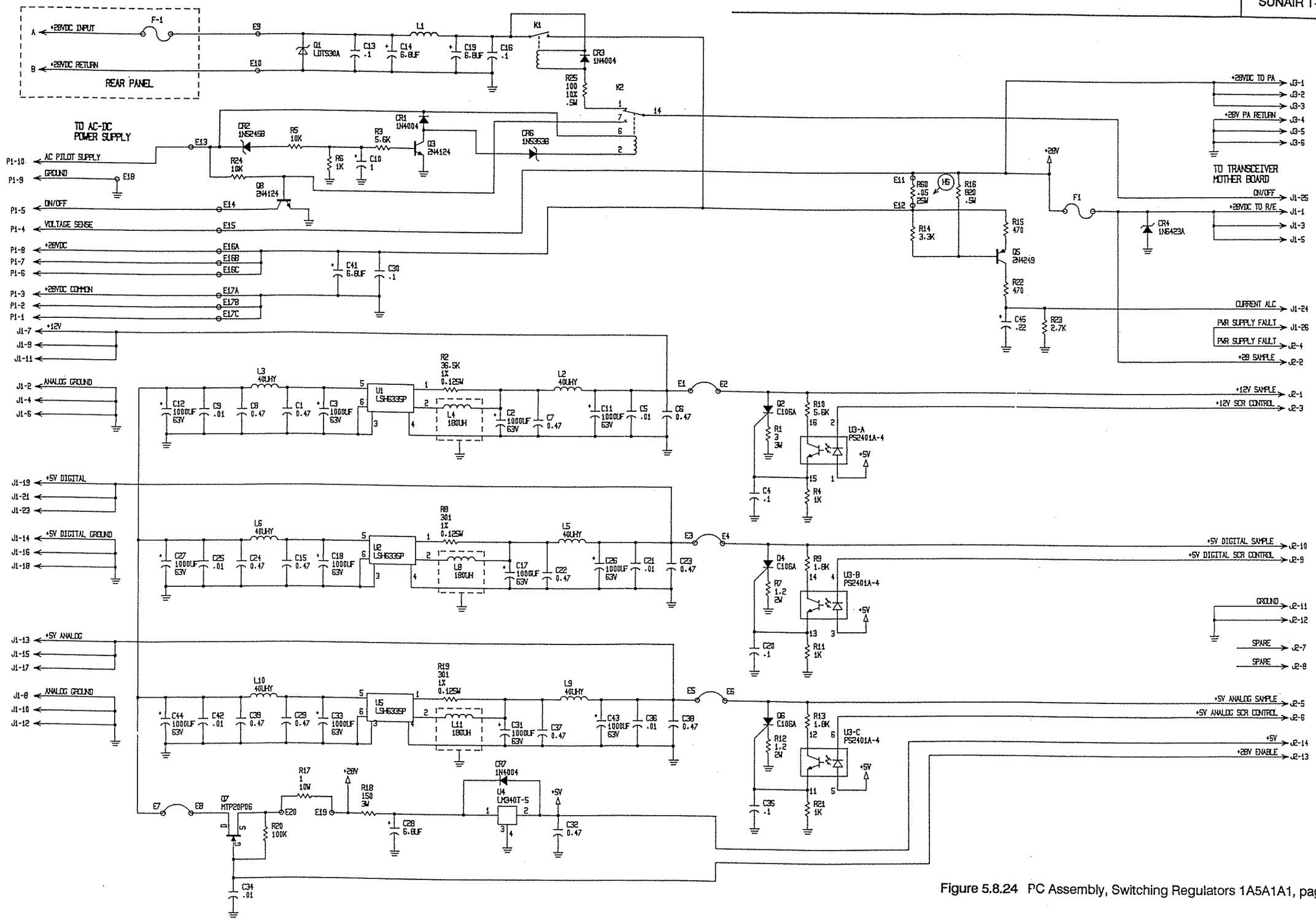

Figure 5.8.24 PC Assembly, Switching Regulators 1A5A1A1, page 2/2.

PC ASSY, CONTROL LOGIC, DC/PS 1A5A1A2

	PC ASSY, CTRL LOGIC, DC/PS 1A5A1A2	8076024099
C1	CAP. .01µF, 50V, X7R 20%	0281730008
C2	CAP. .01µF, 50V, X7R 20%	0281730008
C14	CAP. 6.8µF, 20V, T368	0296780006
C37	CAP. .01µF, 50V, X7R 20%	0281730008
C38	CAP. .01µF, 50V, X7R 20%	0281730008
C39	CAP. .01µF, 50V, X7R 20%	0281730008
C51	CAP. .01µF, 50V, X7R 20%	0281730008
C52	CAP. .01µF, 50V, X7R 20%	0281730008
C53	CAP. .01µF, 50V, X7R 20%	0281730008
C54	CAP. .01µF, 50V, X7R 20%	0281730008
C55	CAP. .01µF, 50V, X7R 20%	0281730008
CR1	DIODE, RECTIFIER 1N4004	0405180004
CR2	DIODE, LED, RED	1004350023
CR3	DIODE, LED, RED	1004350023
CR4	DIODE, LED, RED	1004350023
CR5	DIODE, LED, RED	1004350023
CR6	DIODE, LED, RED	1004350023
CR7	DIODE, LED, RED	1004350023
CR8	DIODE, LED, GREEN	1004350015
CR14	DIODE, LED, RED	1004350023
CR15	DIODE, LED, RED	1004350023
CR16	DIODE, SIGNAL, SIL 1N4454	0405270003
CR17	DIODE, SIGNAL, SIL 1N4454	0405270003
CR18	DIODE, LED, RED	1004350023
P1	CONNECTOR, RIBBON, 14 PIN FEM	1008350001
R2	RESISTOR 10K, 10%, 1/4W	0170410005
R3	RESISTOR, 237K, 1%, 1/8W	1011310007
R4	RESISTOR 180, 10%, 1/4W	0175220000
R9	RESISTOR, 100K, 1/8W, 1%	1001030036
R10	RESISTOR, 1.8M, 10%, 1/4W	1011300001
R11	RESISTOR 10K, 1%, 1/8W	1003050026
R12	RESISTOR, 80.6K, 1%, 1/8W	1011290006
R13	RESISTOR 1.2M, 10%, 1/4W	0174930003
R14	RESISTOR 10K, 1%, 1/8W	1003050026
R15	RESISTOR 270, 10%, 1/4W	0178450006
R16	RESISTOR 390, 10%, 1/4W	0178330001
R17	RESISTOR 100K, 10%, 1/4W	0170390004
R18	RESISTOR 180, 10%, 1/4W	0175220000
R19	RESISTOR, 4.7M, 10 %, 1/4W	1011330008
R20	RESISTOR 180, 10%, 1/4W	0175220000
R21	RESISTOR 10K, 1%, 1/8W	1003050026
R22	RESISTOR 180, 10%, 1/4W	0175220000
R23	RESISTOR, 143K, 1%, 1/8W	1011410001
R24	RESISTOR 270, 10%, 1/4W	0178450006
R26	RESISTOR 680K, 10%, 1/4W	0181480000
R27	RESISTOR 36.5K, 1%, 1/8W	1004050011
R28	RESISTOR 10K, 1%, 1/8W	1003050026
R29	RESISTOR 470K, 10%, 1/4W	0180570005
R30	RESISTOR, 26.1K, 1%, 1/8W	1011280001
R31	RESISTOR 10K, 1%, 1/8W	1003050026
R35	RESISTOR 270, 10%, 1/4W	0178450006
R36	RESISTOR 680K, 10%, 1/4W	0181480000
R37	RESISTOR 36.5K, 1%, 1/8W	1004050011
R38	RESISTOR 10K, 1%, 1/8W	1003050026
R39	RESISTOR 470K, 10%, 1/4W	0180570005
R40	RESISTOR, 26.1K, 1%, 1/8W	1011280001
R41	RESISTOR 10K, 1%, 1/8W	1003050026

R46	RESISTOR 390, 10%, 1/4W	0178330001
R47	RESISTOR 2.7M, 5%, 1/4W	1004900007
R48	RESISTOR 10K, 1%, 1/8W	1003050026
R49	RESISTOR 270, 10%, 1/4W	0178450006
R50	RESISTOR 270, 10%, 1/4W	0178450006
R51	RESISTOR 10K, 10%, 1/4W	0170410005
R52	RESISTOR 10K, 10%, 1/4W	0170410005
R61	RESISTOR 180, 10%, 1/4W	0175220000
R62	RESISTOR 10K, 10%, 1/4W	0170410005
R64	RESISTOR 390, 10%, 1/4W	0178330001
RP1	RES NTWK 8 PIN SIP 10K COM	1005200009
U4	IC. DIGITAL ULN2003A	1005630038
U5	IC. DIGITAL ICL7665S	1010940007
U6	IC. DIGITAL ICL7665S	1010940007
U7	IC. DIGITAL ICL7665S	1010940007
U8	IC, DIGITAL 74HC74	1008000019
U9	IC, DIGITAL 74HC74	1008000019
U10	IC. DIGITAL 74HC14	1006490027
U12	IC. DIGITAL ICL7665S	1010940007
U13	IC. DIGITAL 74HC08	1006490019
U14	IC. DIGITAL 74HC11	1010950002
U16	IC. DIGITAL UDN5703A	1011030004
XP1	CONNECTOR,PCB,TRANSITION,14PIN	1011090147
	CABLE, FLAT, 14 COND. 28AWG	1011170001

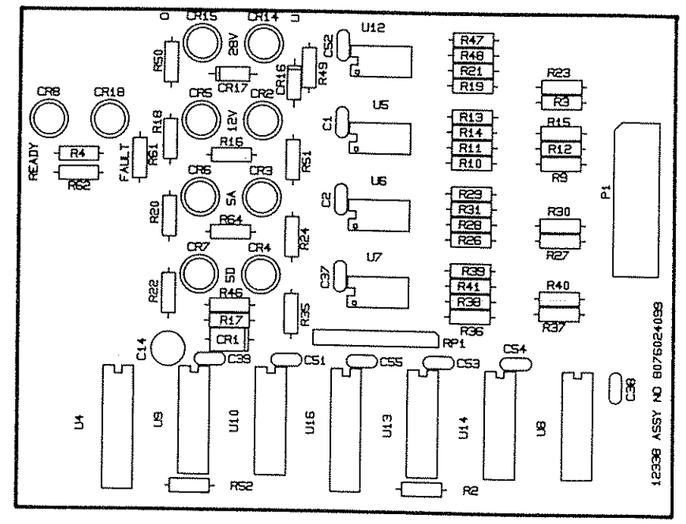

Figure 5.8.25 PC Assembly, Control Logic, DC/PS 1A5A1A2, page 1/2.

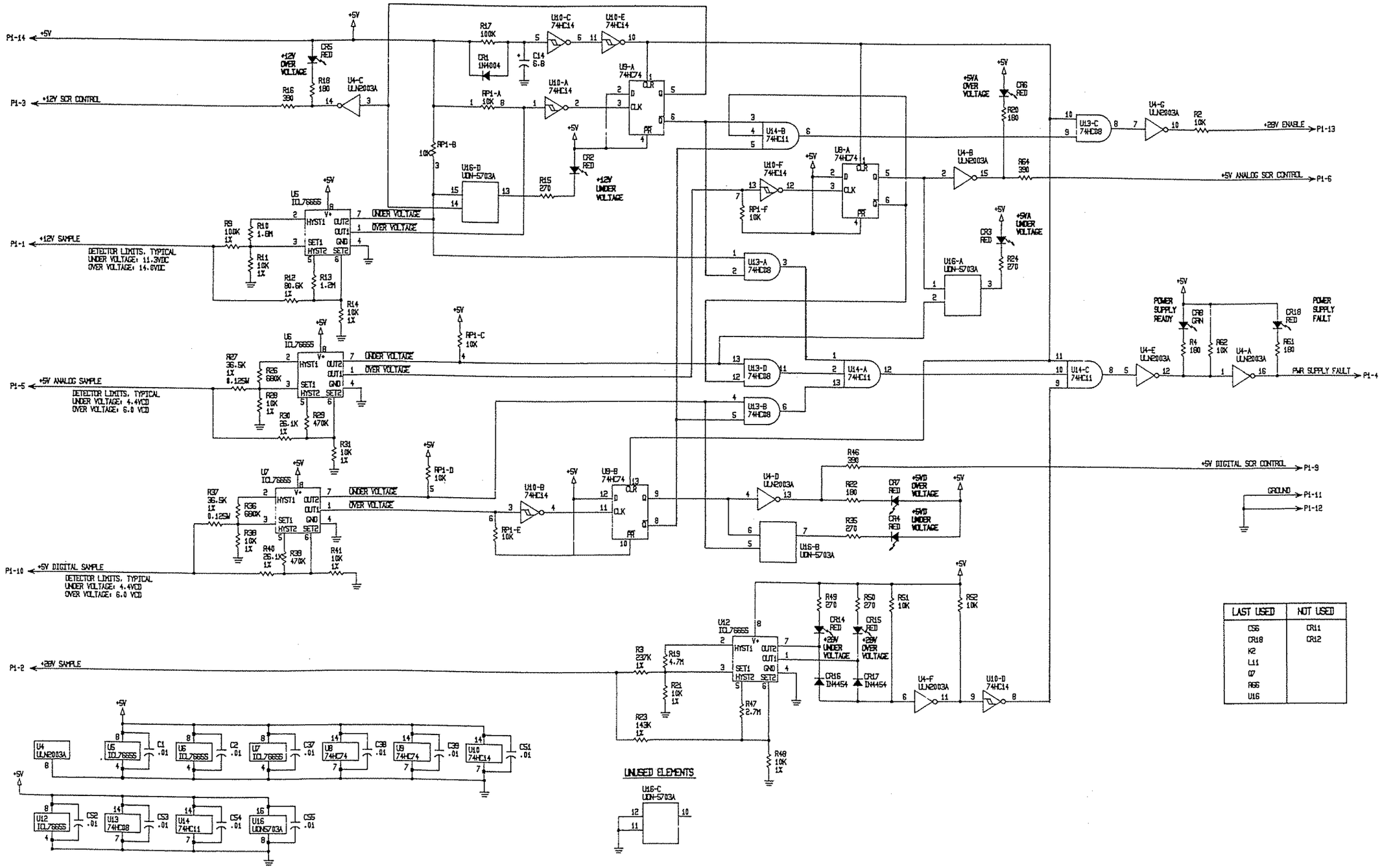

LAST USED	NOT USED
C56	CR11
CR18	CR12
K2	
L11	
Q7	
R65	
U16	

Figure 5.8.25 PC Assembly, Control Logic, DC/PS 1A5A1A2, page 2/2.

POWER SUPPLY ASSEMBLY, 115/230 VAC 1A5A2

	PWR SUPPLY ASSY, 115/230 VAC 1A5A2	8103021091
1A5A2A1	PC ASSY, FILTER, AC/PS	8076021197
1A5A2A2	PC ASSY, 28V REGULATOR, 17 AMP	8076021391
CR1	DIODE, BRIDGE, 35A,400V	1010600010
J1	CONNECTOR, POWER, 10 PIN, MALE	1011050005
Q1	TRIAC MAC3040-401	1010610015
R1	RESISTOR 30, 5%, 15W	1000860019
T1	TRANSFORMER,AC,600VA	1010630016
XF1	FUSEHOLDER, PANEL MOUNT	0849030005
XF2	FUSEHOLDER, PANEL MOUNT	0849030005
ZS1	VARISTOR, MOV V140LA5	1011300010
ZS2	VARISTOR, MOV V140LA5	1011300010
	CHASSIS, AC POWER SUPPLY	8076021502
	CONNECTOR, HOUSING, 10 PIN,MAL	1010860011
	CONNECTOR, POWER, 2 PIN ROUND	1011230011
F1, F2	FUSE, MDX, 7 AMP, 125V	0841270007
F3	FUSE, SFE, 20 AMP. 32V	1011290014
	FUSEMOUNT, 1 POLE W/TERMINALS	0842490001
	HEATSINK, AC POWER SUPPLY	8076021901
	INSULATOR, TO-3 SIL ELASTOMER	0841560005

Figure 5.8.26 Power Supply Assembly 115/230 VAC 1A5A2, page 1/2.

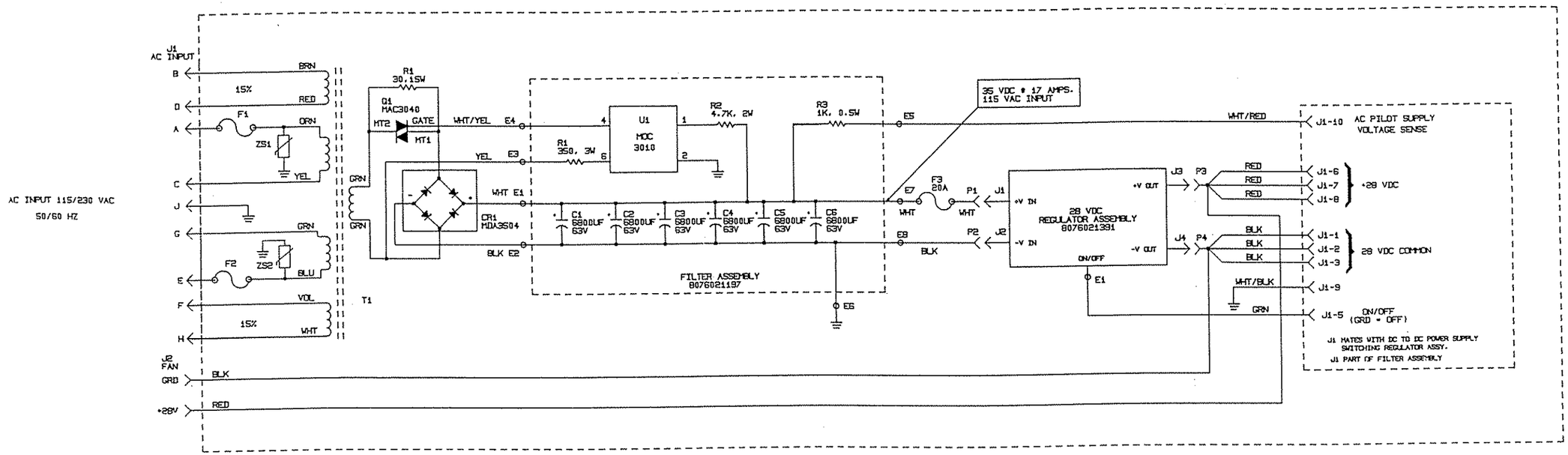

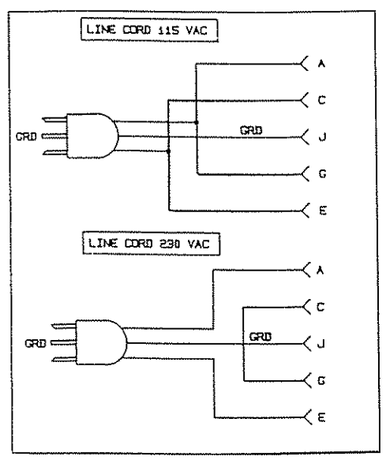

FUSE SELECTION	PART NUMBER
115 VAC: 7A	0841270007
230 VAC: 3A	0896660001

ADD HIGH-LINE LINE CORDS.

Figure 5.8.26 Power Supply Assembly 115/230 VAC 1A5A2, page 2/2.

THIS PAGE INTENTIONALLY LEFT BLANK.

PC ASSY, FILTER, AC/PS 1A5A2A1

	PC ASSY, FILTER, AC/PS 1A5A2A1	8076021197
C1	CAP. 6800 µF, 63V, 20%, 105C	1010800019
C2	CAP. 6800 µF, 63V, 20%, 105C	1010800019
C3	CAP. 6800 µF, 63V, 20%, 105C	1010800019
C4	CAP. 6800 µF, 63V, 20%, 105C	1010800019
C5	CAP. 6800 µF, 63V, 20%, 105C	1010800019
C6	CAP. 6800 µF, 63V, 20%, 105C	1010800019
R1	RESISTOR 350, 5%, 3W	0162930003
R2	RESISTOR 4.7K, 10%, 2W	0164130004
R3	RESISTOR 100, 10%, 1/2W	0174790007
U1	IC LINEAR MOC3010	1010620011

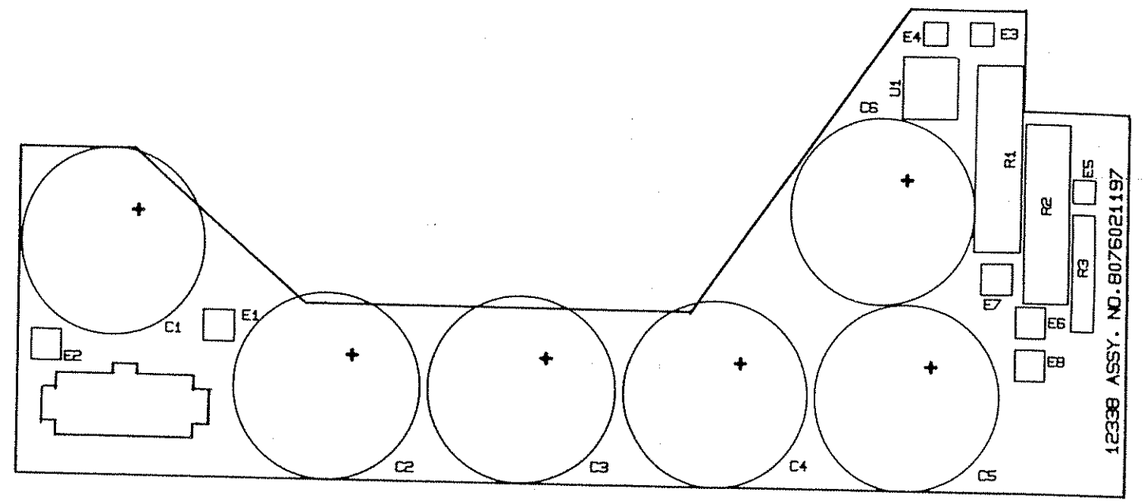

Figure 5.8.27 PC Assembly, Filter, AC/PS 1A5A2A1, page 1/1.

PC ASSY,28V REGULATOR, 17 AMP 1A5A2A2

	PC ASSY,28V REG, 17 AMP 1A5A2A2	8076021391
C1	CAP. .47µF, 50V, X7R 20%	0283377771
C2	CAPACITOR 0.1µF, 50V, X7R	1011180014
C3	CAP. 0.047 µF, 50V, X7R, 10%	1010740008
C4	CAP. 2.2µF, 35V, T368	0273950002
C5	CAP. .01µF, 50V, X7R 20%	0281730008
C6	CAP. 1µF, 35V, 196D	0281660000
C7	CAPACITOR 0.1µF, 50V, X7R	1011180014
C8	CAP. .47µF, 50V, X7R 20%	0283377771
C9	CAP. .01µF, 50V, X7R 20%	0281730008
C10	CAP. .01µF, 50V, X7R 20%	0281730008
C11	CAP. 1µF, 35V, 196D	0281660000
C12	CAPACITOR 0.1µF, 50V, X7R	1011180014
C13	CAP. .47µF, 50V, X7R 20%	0283377771
C15	CAP. 1000µF, 63V, 20%, 105C	1011350009
C16	CAP. 22µF, 15V, T368	0296660001
CR1	DIODE, SIGNAL, SIL. 1N4454	0405270003
CR2	DIODE, ZENER 1N5358B	0404900003
CR3	DIODE, LED, RED, PC MOUNT	1008480029
CR4	DIODE, ZENER 1N5364B	0405230001
CR5	DIODE, RECTIFIER 1N4004	0405180004
CR6	DIODE, LED, RED, PC MOUNT	1008480029
CR7	DIODE, LED, RED, PC MOUNT	1008480029
CR8	DIODE, LED, GREEN PC MOUNT	1011030012
CR9	DIODE, SIGNAL, SIL. 1N4454	0405270003
CR10	DIODE, SIGNAL, SIL. 1N4454	0405270003
J1	TERMINAL, PC MOUNT, 3/16" MALE	1008550027
J2	TERMINAL, PC MOUNT, 1/4" MALE	1008330035
J3	TERMINAL, PC MOUNT, 3/16" MALE	1008550027
J4	TERMINAL, PC MOUNT, 1/4" MALE	1008330035
K1	RELAY, SPST, 24V	1008590029
Q1	TRANSISTOR, PNP, MJ11031	1010990012
Q2	DIODE, SCR 2N5062	1011010011
Q3	TRANSISTOR, NPN, SI. 2N2222A	0448580004
R1	RESISTOR 470, 10%, 1W	0165280000
R2	RESISTOR 560, 5%, 1/4W	0183200004
R3	RESISTOR, 3.9K, 5%, 1/8W	1010803921
R4	RESISTOR 4.7K, 5%, 1/8W	1010804723
R5	RESISTOR 6.8K, 5%, 1/8W	1010806823
R6	RESISTOR 2.2K, 5%, 1/8W	1010802224
R7	POT. 500, 10% 3/4W, 15 TURNS	0338490078
R8	RESISTOR 2.7K, 10%, 1/4W	0186670001
R9	RESISTOR 1K, 10%, 1/4W	0171560001
R10	RESISTOR 4.7K, 5%, 1/4W	0170770001
R11	RESISTOR 2.7K, 10%, 1/2W	0165780002
R12	RESISTOR 10K, 5%, 1/8W	1010801031
R13	RESISTOR 10K, 5%, 1/8W	1010801031
R14	RESISTOR 1.8K, 5%, 1/8W	1010801821
R15	POT. 500, 10% 3/4W, 15 TURNS	0338490078
R16	RESISTOR 680, 5%, 1/8W	1010806815
R17	RESISTOR 220, 10%, 1/4W	0171320000
R18	RESISTOR 180K, 5%, 1/8W	1010801848
R19	RESISTOR, 237K, 1%, 1/8W	1011310007
R20	RESISTOR, 4.7M, 10 %, 1/4W	1011330008
R21	RESISTOR 10K, 5%, 1/8W	1010801031
R22	RESISTOR 2.7M, 5%, 1/4W	1004900007
R23	RESISTOR 10K, 5%, 1/8W	1010801031
R24	RESISTOR 680, 10%, 1/4W	0176630007
R25	RESISTOR, 3.9K, 5%, 1/8W	1010803921
R27	RESISTOR 390, 10%, 1/2W	0173260004
R28	RESISTOR 680, 10%, 1/4W	0176630007
R29	RESISTOR 2.2K, 10%, 1W	0164510001
R30	RESISTOR 5.6K, 5%, 1/8W	1010805622
R31	RESISTOR 4.7K, 5%, 1/8W	1010804723
T1	TOROID, SLOTTED, HALL EFFECT	1011040018
U1	IC. LINEAR LM340/7812	1003410022
U2	IC. LINEAR MC1723L	1010270036
U3	IC. DIGITAL 2501-1	1011000016
U4	IC. LINEAR LM311N	1005760021
U5	IC. LINEAR UGS3503	1011020017
U6	IC. DIGITAL ICL7665S	1010940007
U7	IC.LINEAR UA78L05 AWC	1010150014
XQ1	SOCKET, XSISTOR, TO-3, HI-PWR	1011220016

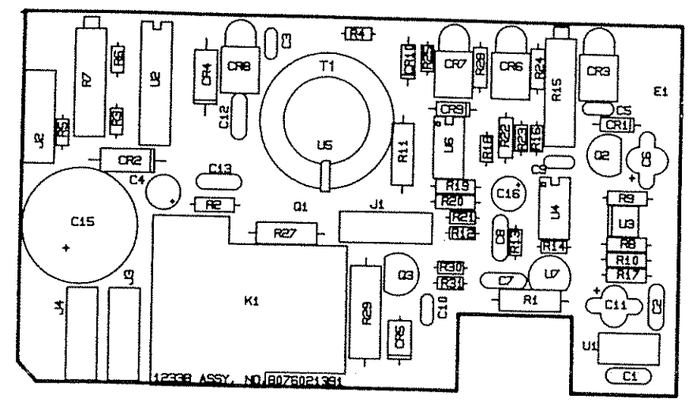

Figure 5.8.28 PC Assembly, 28V Regulator, 17 AMP 1A5A2A2,page 1/2.

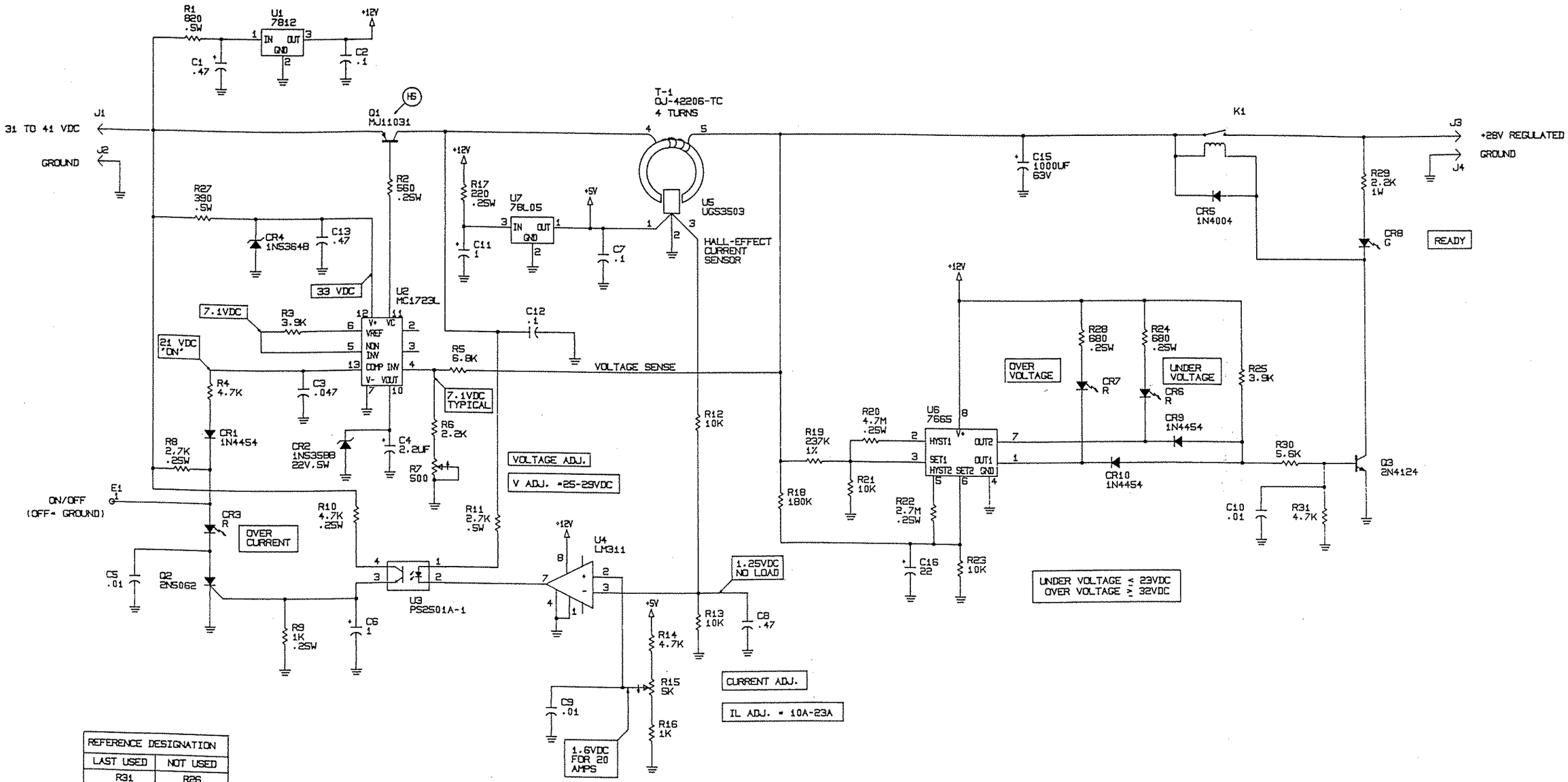

REFERENCE DESIGNATION	
LAST USED	NOT USED
R31	R26
CR10	
U7	
Q3	
C15	

Figure 5.8.28 PC Assembly, 28V Regulator, 17 AMP 1A5A2A2,page 2/2.

PC ASSY, REAR PANEL CONNECTOR 1A6A1

	PC ASSY, REAR PANEL CONN. 1A6A1	8076011094
C1	CAP. .01µF, 50V, X7R 20%	0281730008
C2	CAP. .01µF, 50V, X7R 20%	0281730008
C3	CAP. .01µF, 50V, X7R 20%	0281730008
C4	CAP. .01µF, 50V, X7R 20%	0281730008
C5	CAP. .01µF, 50V, X7R 20%	0281730008
C6	CAP. .01µF, 50V, X7R 20%	0281730008
C7	CAP. .01µF, 50V, X7R 20%	0281730008
C8	CAP. .01µF, 50V, X7R 20%	0281730008
C9	CAP. .01µF, 50V, X7R 20%	0281730008
C10	CAP. .01µF, 50V, X7R 20%	0281730008
C11	CAP. .01µF, 50V, X7R 20%	0281730008
C12	CAP. .01µF, 50V, X7R 20%	0281730008
C13	CAP. .01µF, 50V, X7R 20%	0281730008
C14	CAP. .01µF, 50V, X7R 20%	0281730008
C15	CAP. .01µF, 50V, X7R 20%	0281730008
C16	CAP. .01µF, 50V, X7R 20%	0281730008
C17	CAP. .01µF, 50V, X7R 20%	0281730008
C18	CAP. .01µF, 50V, X7R 20%	0281730008
C19	CAP. .01µF, 50V, X7R 20%	0281730008
C20	CAP. .01µF, 50V, X7R 20%	0281730008
C21	CAP. .01µF, 50V, X7R 20%	0281730008
C22	CAP. .01µF, 50V, X7R 20%	0281730008
C23	CAP. .01µF, 50V, X7R 20%	0281730008
C24	CAP. .01µF, 50V, X7R 20%	0281730008
C25	CAP. .01µF, 50V, X7R 20%	0281730008
C26	CAP. .01µF, 50V, X7R 20%	0281730008
C28	CAP. .01µF, 50V, X7R 20%	0281730008
C29	CAP. .01µF, 50V, X7R 20%	0281730008
C30	CAP. .01µF, 50V, X7R 20%	0281730008
C31	CAP. .01µF, 50V, X7R 20%	0281730008
C32	CAP. .01µF, 50V, X7R 20%	0281730008
C33	CAP. .01µF, 50V, X7R 20%	0281730008
C34	CAP. .01µF, 50V, X7R 20%	0281730008
C35	CAP. .01µF, 50V, X7R 20%	0281730008
C36	CAP. .01µF, 50V, X7R 20%	0281730008
C37	CAP. .01µF, 50V, X7R 20%	0281730008
C38	CAP. .01µF, 50V, X7R 20%	0281730008
C39	CAP. .01µF, 50V, X7R 20%	0281730008
C40	CAP. .01µF, 50V, X7R 20%	0281730008
C41	CAP. .01µF, 50V, X7R 20%	0281730008
C42	CAP. .01µF, 50V, X7R 20%	0281730008
C43	CAP. .01µF, 50V, X7R 20%	0281730008
C44	CAP. .01µF, 50V, X7R 20%	0281730008
C45	CAP. .01µF, 50V, X7R 20%	0281730008
C46	CAP. .01µF, 50V, X7R 20%	0281730008
C47	CAP. .01µF, 50V, X7R 20%	0281730008
C48	CAP. .01µF, 50V, X7R 20%	0281730008
C49	CAP. .01µF, 50V, X7R 20%	0281730008
C50	CAP. .01µF, 50V, X7R 20%	0281730008
C53	CAP. .01µF, 50V, X7R 20%	0281730008
C54	CAP. .01µF, 50V, X7R 20%	0281730008
C55	CAP. .01µF, 50V, X7R 20%	0281730008
C56	CAP. .01µF, 50V, X7R 20%	0281730008
C57	CAP. .01µF, 50V, X7R 20%	0281730008
C58	CAP. .01µF, 50V, X7R 20%	0281730008
	CONNECTOR,POWER,39PIN,FEMALE	1011100002
	CONNECTOR, POWER, 19 PIN, FEM	1011110008

	CONNECTOR, HEADER, 20 PIN MALE	1011210207
	KEY, POLARIZING	1008070033

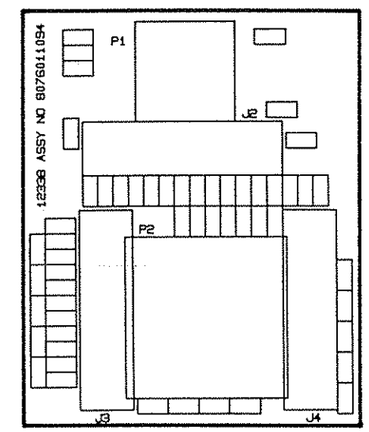

Figure 5.8.29 PC Assembly, Rear Panel Connector 1A6A1, page 1/2.

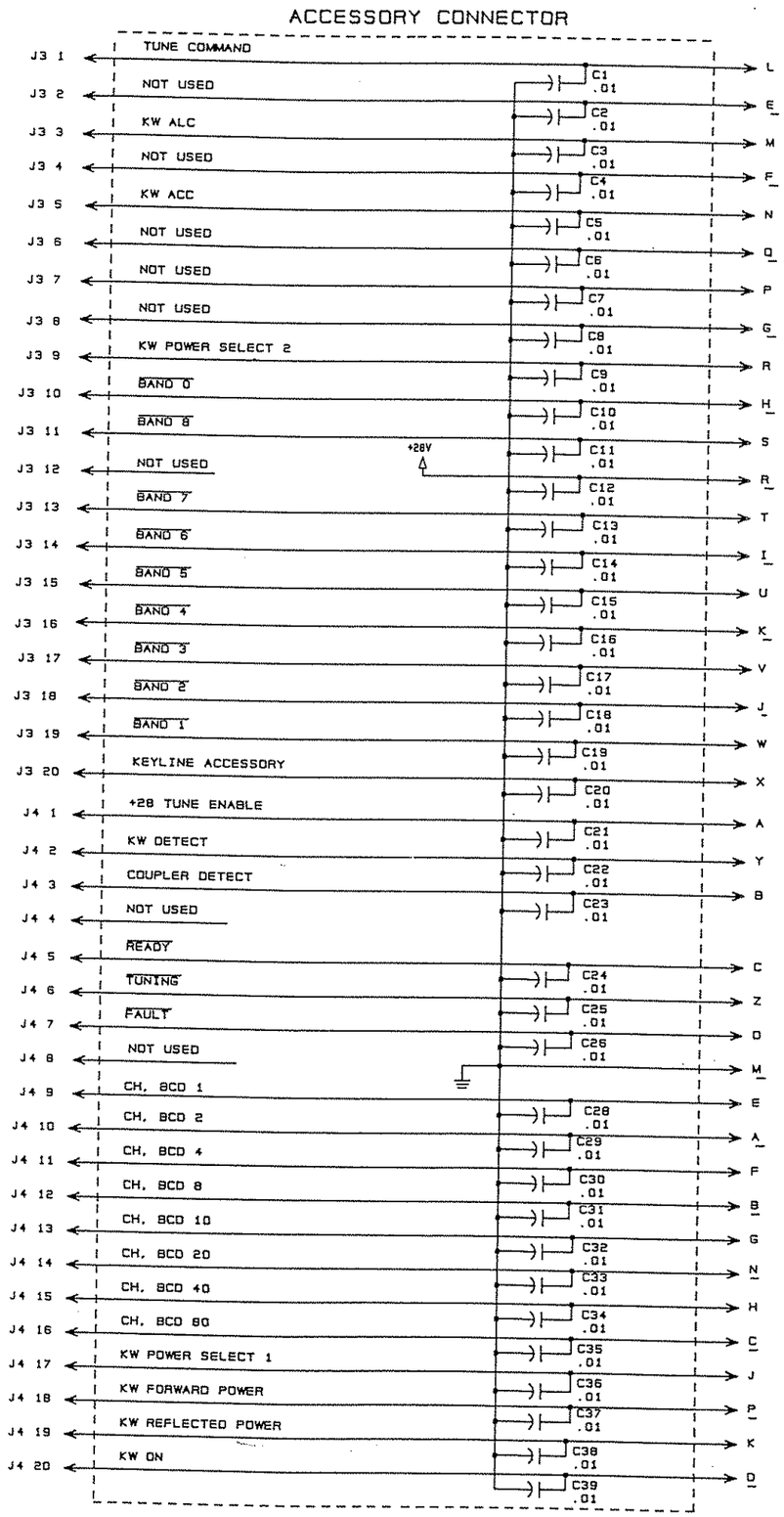

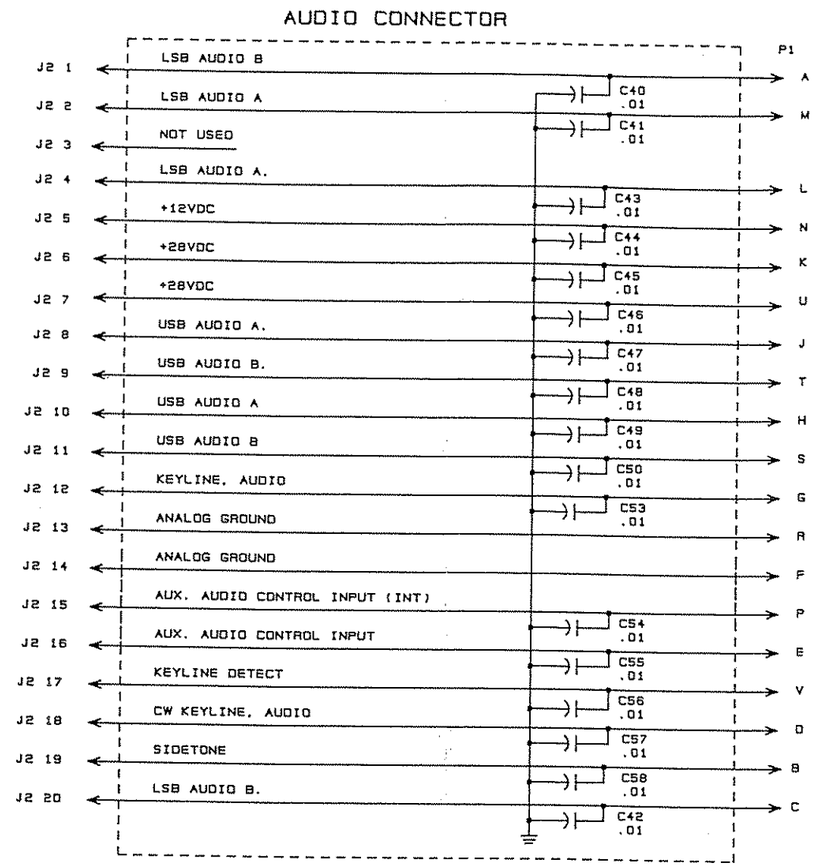

NOTE:
UNDERLINED CHARACTERS
DENOTE LOWER CASE.

COMPONENT NOT USED.
C27, C51, C52, J1

Figure 5.8.29 PC Assembly, Rear Panel Connector 1A6A1, page 2/2.

THIS PAGE INTENTIONALLY LEFT BLANK.

SERVICE BULLETIN

Sunair Electronics, LLC.
Customer Service
3400 SW 60th Ave.
Ocala, Fl. 34474 U.S.A.
Phone: 352-873-4000
Fax: 352-854-6238

Email: techsupport@sunairhf.com

NUMBER: 9000-004 / REV 1

DATE: 30 November 1992 / Revised 14 June 1999

ATTENTION: All Dealers and Customers

EQUIPMENT: RT-9000, T-9400, R-9200 and RCU-9310.

SUBJECT: Replacement of Front Panel Liquid Crystal Display's (LCD's) Back Lighting Devices.

REFERENCE: Applicable Operations and Maintenance Manuals and Diagrams 1 through 3 of this Service Bulletin.

PURPOSE: Installation of new Back Lighting devices for Front Panel LCD'S.

TEXT: The Back Lighting devices for the two (2) Front Panel LCD's P/N 8076041791 and P/N 8076040892 will gradually lose their luminescence with time. For this reason operating personnel should turn OFF the panel light when ever it is not needed to give the Back Lighting devices the longest possible life. This is accomplished by depressing the 'PNL LT' push button on the Front Panel to turn OFF the Back lighting and depressing it again to turn the Back Lighting ON again when needed. Once the Back lighting devices have lost their luminescence, the back light may be renewed by ordering replacement Back Lighting devices for the applicable LCD and installing per inclosed instructions.

1. Custom LCD, Full Function, P/N 8076040604.
   Replacement Back Light, Assembly P/N 8076040892.

2. Custom LCD, 1 x 40 Character, P/N 8076041601.
   Replacement Back Light, Assembly P/N 8076041791.

Replacement of LCD Back Lighting Devices

1. Refer to Section V of applicable Operations and Maintenance Manual.

    a. Remove equipment top and bottom covers.

    b. Remove Front Panel 1A1 assembly.

2. Use enclosed diagrams 1 through 3 to install new back lights in the LCD's.

3. Replace Front Panel 1A1 assembly, and top and bottom covers. Return equipment to operational status.

4. Insert this Service Bulletin into Section V of applicable Operations and Maintenance Manual.

NOTE: Once the Back Lights have been replaced initially, they can be replaced again as needed. When the luminescence has decreased remove the installed Back Light and insert a new one in its place.

Sunair Electronics, LLC.
Customer Service
3400 SW 60th Ave.
Ocala, Fl. 34474 U.S.A.
Phone: 352-873-4000
Fax: 352-854-6238

Email: techsupport@sunairhf.com

SERVICE BULLETIN

SUNAIR ELECTRONICS, LLC
3400 SW 60TH AVE.
OCALA, FL. 34474

PHONE: 352-873-4000
FAX: 352-854-6238

NUMBER: 9000-006

DATE: 3 July 1996

ATTENTION: All Customers using the following 9000 Series HF/SSB equipment.

EQUIPMENT: RT-9000, RT-9000A, R-9200 and T-9400.

SUBJECT: Front Panel LCD, Operational Display P/N 8076040604.

REFERENCE:

1. RT-9000 Manual P/N 8076000505 pages 5-2, 5-12 and 5-44.
2. R-9200 Manual P/N 8102000503 pages 5-2, 5-9 and 5-34.
3. T-9400 Manual P/N 8103000507 pages 5-2, 5-11 and 5-36.
4. Diagram 1 of this Service Bulletin.

PURPOSE: Eliminate the separation of E.L. Inverter from Front Panel LCD, Operational Display.

TEXT: A small percentage of the LCD, Operational Displays, are experiencing separation of E.L. Inverter from the printed circuit board of the display. This is due to an interference condition between the E.L. Inverter and I/O connector whenever the 1A2A1 CPU and 1A2A8 I/O assembly are removed and replaced. To preclude the possibility of continued separation of E.L. Inverter, Sunair is installing Inverter Cover P/N 8076042801 and Insulator P/N 8076042909 on current production equipment.

For field modification of the Operational Displays, Sunair is providing Kit E.L. Inverter cover P/N 8076043000, containing the following parts:

E.L. Inverter Cover P/N 8076042801
Insulator, E.L. Cover P/N 8076042909
Drawing, Inverter Cover Installation P/N 8076043107

1. See page 5-2 of applicable manual.
   a) Remove top and bottom covers (6 screws and 8 latches).

2. See applicable page in manual.
   a) Remove Front Panel Assembly. (6 screws with split washers and disconnect 2 ribbon cables).

3. Using steps on Diagram 1 install the E.L. Inverter Cover in the Front Panel Assembly.

4. Reassemble in reverse and return unit to operational status.

This Service Bulletin should be placed in applicable manual. At the front of Maintenance Section V or Bulletins section.

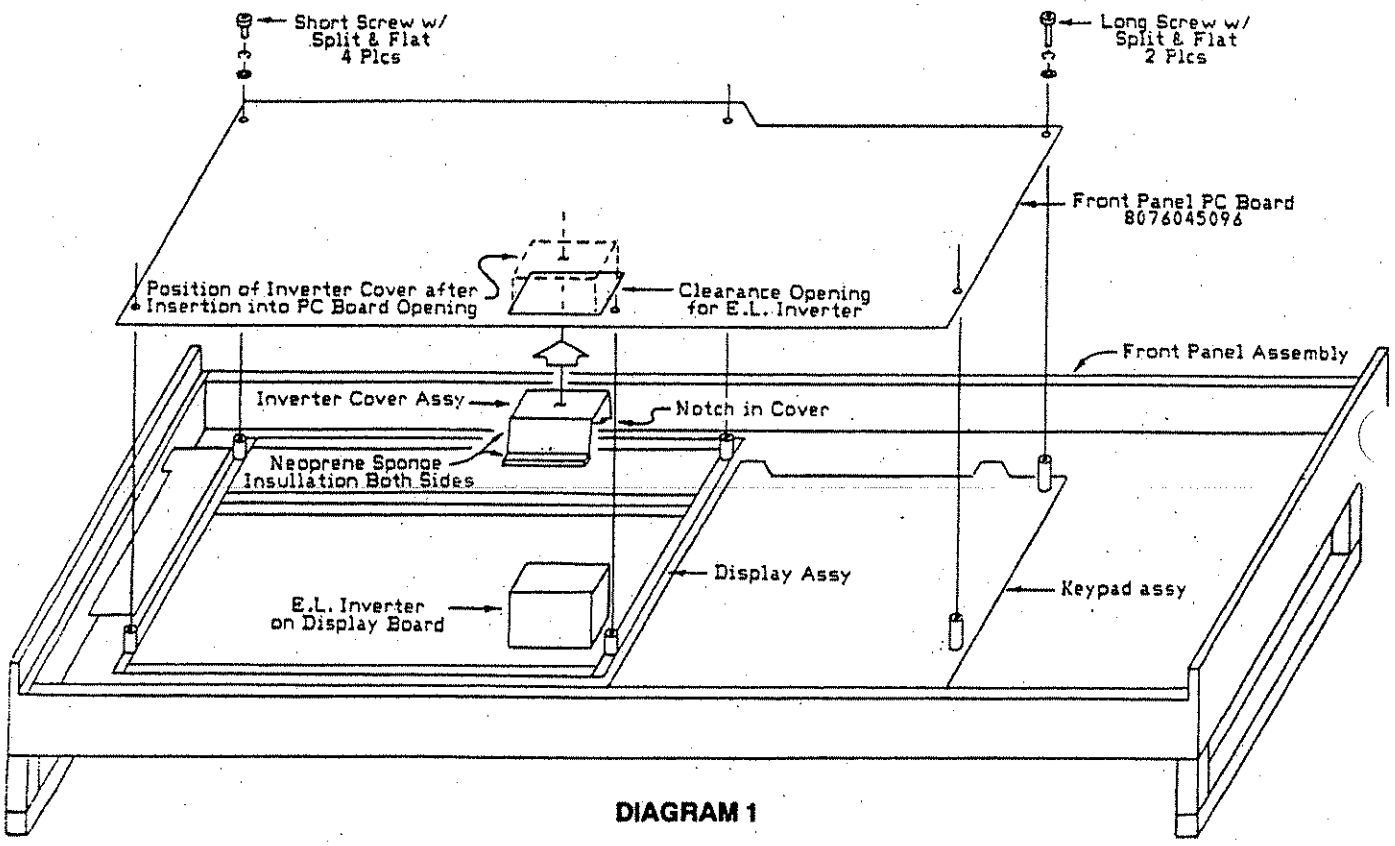

DIAGRAM 1

1. Remove Front Panel PC Board 8076045096 from Front Panel Assembly (6 screws with split and flat washers).

2. Insert E.L. Inverter Cover Assembly into inverter clearance opening in Front Panel PC Board (notch in cover toward center of board).

3. Reinstall Front Panel PC Board on Front Panel Assembly. Being careful to properly align P1 and P2 with J2 and J3 on Front Panel LCD, Operational Display. Connectors should mate smoothly, DO NOT FORCE.

SERVICE BULLETIN

SUNAIR ELECTRONICS, LLC
3400 SW 60TH AVE.
OCALA, FL. 34474

PHONE: 352-873-4000
FAX: 352-854-6238

NUMBER: 9000-007 Reference ECN: 8076-182/182A

DATE: 13 Nov 1996

ATTENTION: All Customers with RT-9000(A) HF/SSB equipment containing PC assembly RF Detector/ Coax Keyline in Filter Module assembly 1A3, P/N 8076050090.

EQUIPMENT: RT-9000, RT-9000A supplied with 1A3A1 PC assembly RF Detector/Coax Keyline. P/N 8076052092.

REFERENCE: Manual P/N 8076000505 Section V, pages 5-105 through 5-107.

PURPOSE: Product improvement by providing High-Voltage transient protection for 1A3A1 Q3.
A. CR13 protects Q3 Drain-to-Source.
B. R14 and C32 protects Q3 Gate-to-Source.

TEXT: To improve equipment reliability, Sunair is installing transient protection for Q1 on PC assembly RF Detector/Coax Key used in current production equipment.

For field modification of the PC assembly, Sunair is providing the following Kit and instructions for upgrading your equipment.

1ea	CR13	IN6283A, Diode Tranzorb	1011260000
1ea	R14	10K, 1/8watt, Resistor	1010801031
1ea	C32	0.001 UF Capacitor, 100V, X7R, 20%	0281630003
1ea	Q3	2N7000, Transistor, N-CH, FET	1011050013

Installation instructions:

1. See pages 5-2 and 5-6 of RT-9000(A) manual.
   a) Remove top cover.
   b) Remove top cover of 1A3 Filter Module.

2. Referring to supplied page 5-107B.
   a) Add Diode CR13, by soldering cathode lead to L4 lead connected to TP1. Solder Anode lead of CR13 to R6 lead.
   b) Desolder Q3's Gate lead (center lead) from PC pad. Using an ohm meter compare installed Q3 with new Q3 supplied. If installed Q3 is damaged, replace with Q3 supplied. Add resistor R14 between Q3 Gate lead and PC pad where the Gate lead was removed.
   c) Add capacitor C32 from Q3 Gate lead to Q3 Source lead (Bottom lead). Solder all the above connections.

3. Power up RT-9000, select any frequency between 1.6 and 29 MHz, MODE USB. Remove P1 connector at J1 on PC Assembly.
   a) Using VOM set to RX1 measure J1 on PC Assembly to ground.
   Should read ∞ .
   b) Depress PTT on microphone. **DO NOT SPEAK INTO MICROPHONE.** J1 to ground should read 10 ohms or less. Release PTT on microphone. Reconnect P1 connector.

4. Replace covers and return equipment to operation. Place new pages 5-107, 5-107A, 5-107B, and 5-108 in your manuals. Place Service Bulletin in Maintenance or Bulletin section.

1. REMOVE RIBBON CABLE CONNECTORS.
2. REMOVE SIX (6) 4-40 SCREWS, LIFT P.C. BOARD.
3. REMOVE RIBBON CABLE UNDER P.C. BOARD.
4. GO TO DIAGRAM 2 TO REMOVE LCD ASSEMBLY.
5. INSTALL IN REVERSE ORDER.

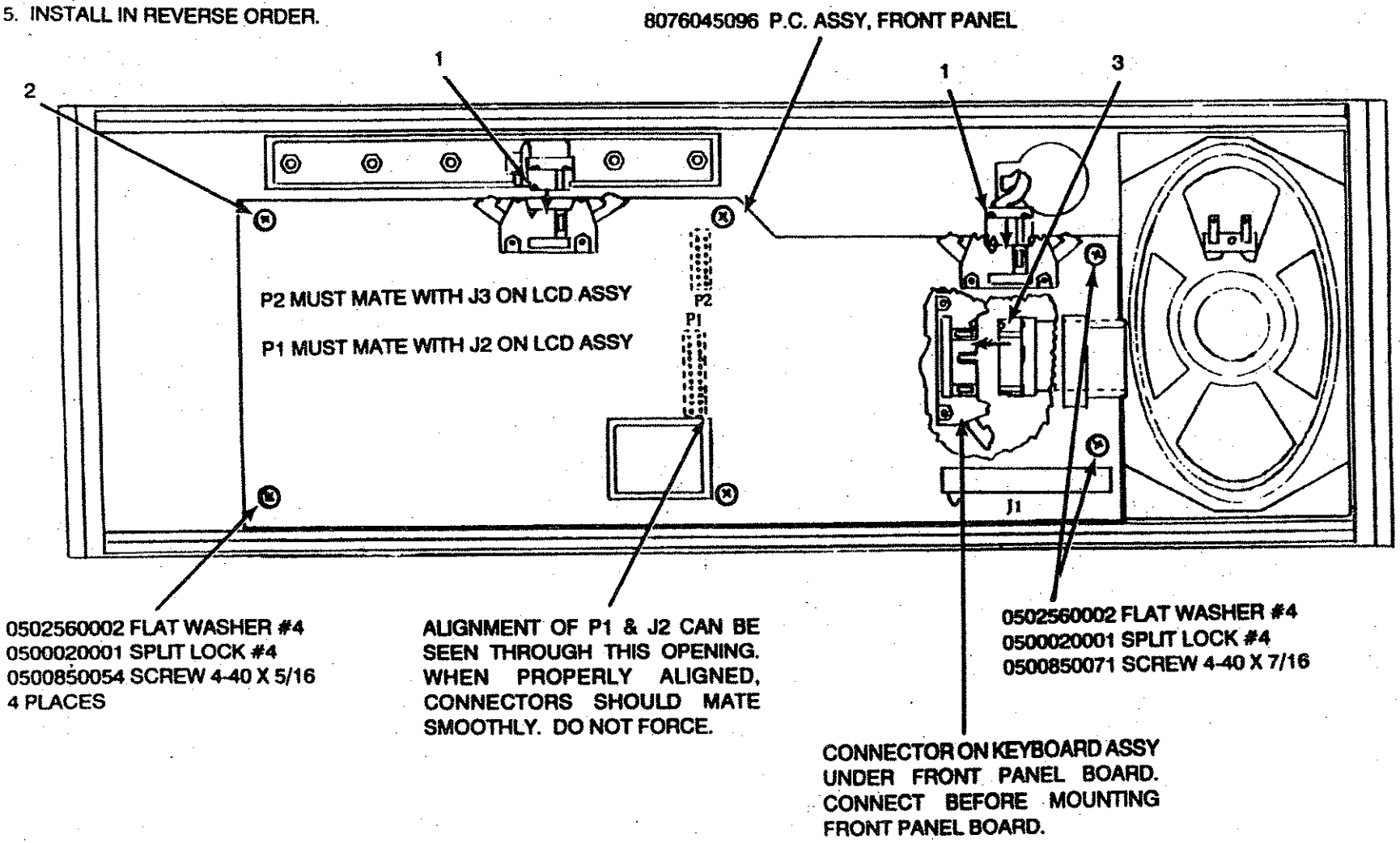

Diagram 1: Removal and Installation of Front Panel P.C. Assembly.

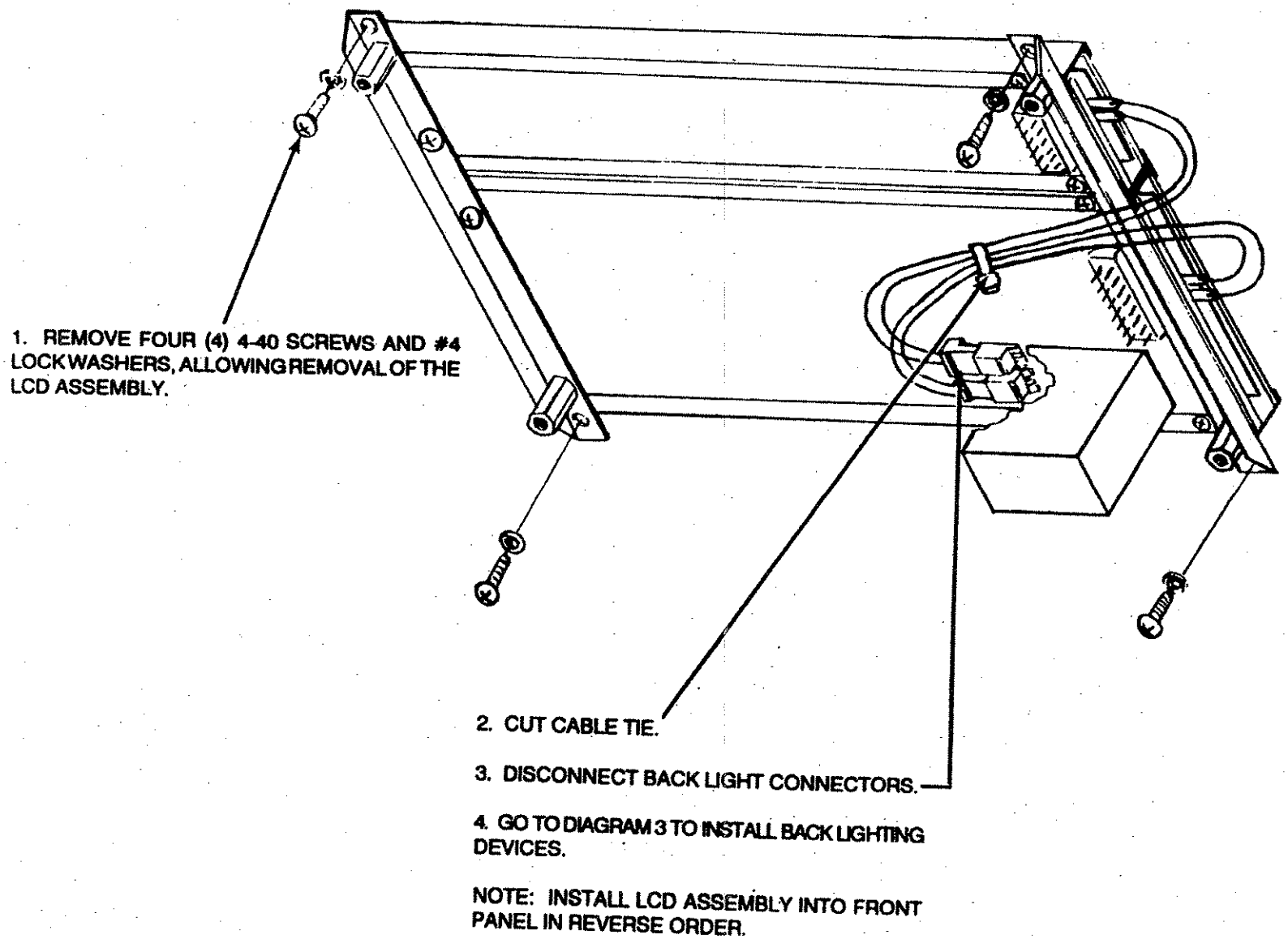

Diagram 2: Removal and Installation of LCD Assembly.

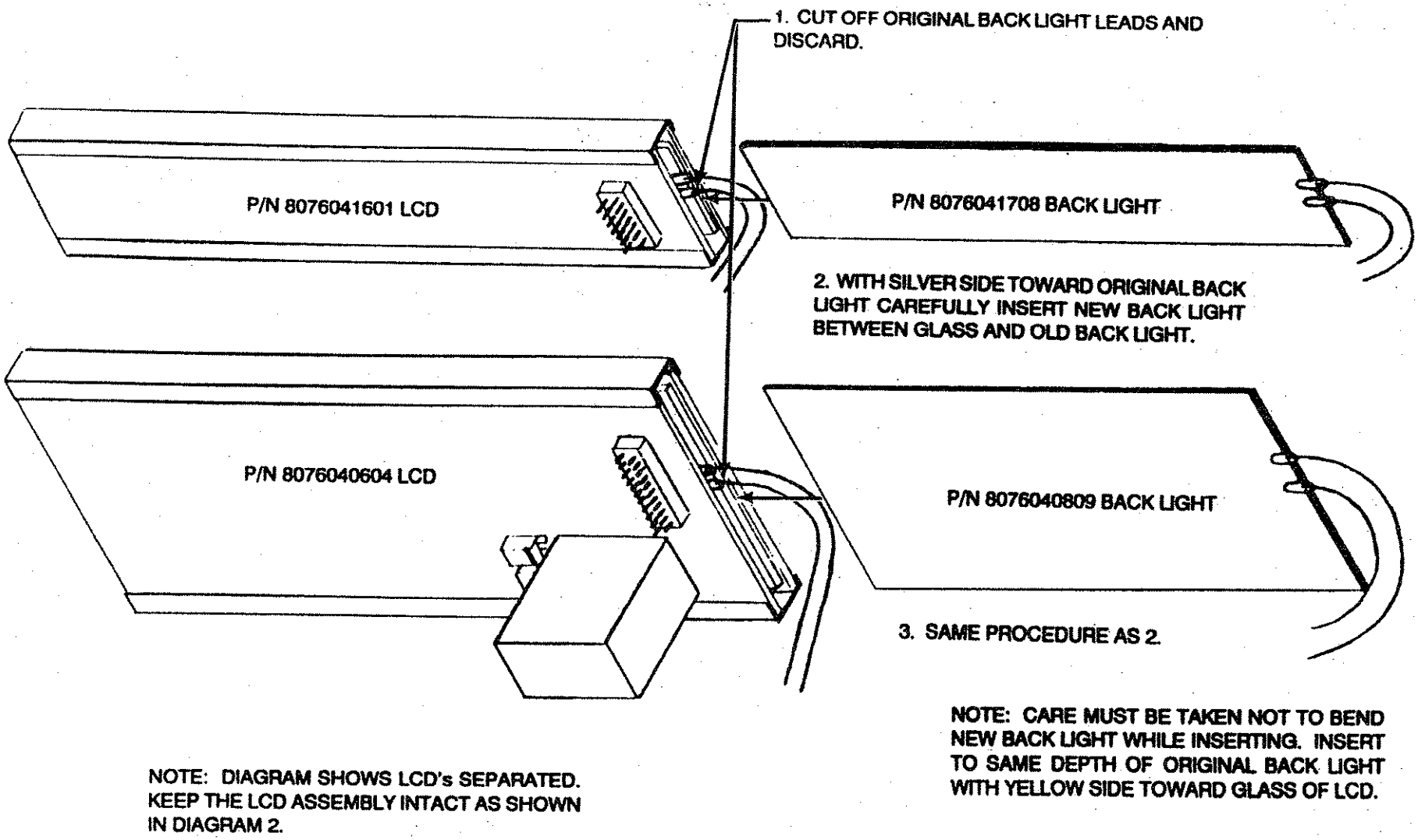

Diagram 3: Installation of Back Lighting Devices.

SERVICE BULLETIN

SUNAIR ELECTRONICS, LLC
3400 SW 60TH AVE.
OCALA, FL. 34474

PHONE: 352-873-4000
FAX: 352-854-6238

NUMBER: 9000-008/ECN Reference 8076-0241

DATE: 22 June, 2001

ATTENTION: All Customers using the following 9000 Series HF/SSB Equipment.

EQUIPMENT: RT-9000, RT-9000A, T-9400, T-9410, R-9200 and R-9210.

SUBJECT: 1A2A2 Synthesizer Module P/N 8076060095 Revision A used in the above equipment. Consisting of the following:

1. PC Assembly 1A2A2A1, First L.O. P/N 8076068096.
2. PC Assembly 1A2A2A2, Second L.O. P/N 8076066093.
3. PC Assembly 1A2A2A3, BFO P/N 8076062098.
4. PC Assembly 1A2A2A4, Ref. Loop and Doubler P/N 8076064091.
5. PC Assembly 1A2A2A5, Mother Board (SYN) P/N 8076061091.

TEXT: This Module and PC Assemblies are no longer manufactured as various parts are unavailable for manufacturing the 1A2A2 Synthesizer Module Revision A. See Figure 1. These replacement spares will be available until inventories are exhausted.

The replacement 1A2A2 Synthesizer PC Assembly P/N 8076060095 Revision B is now being manufactured. See Figure 2. This new release Revision B is a direct replacement, Hybrid Direct-Digital Synthesis (DDS)-Phase Lock Loop single unit structure, which is a form, fit and function backward and forward compatible direct replacement for the 1A2A2 Synthesizer Module and PC Assemblies. All new equipment manufactured after June 2001 will incorporate the new 1A2A2 Synthesizer PC Assembly Revision B.

This PC Assembly is manufactured using Surface Mount Technology (SMT). If future repairs are required and you do not have SMT repair capabilities, the 1A2A2 Synthesizer PC Assembly should be returned to the Sunair Factory for repair in accordance with established procedures for the handling of returned equipment.

If you have Surface Mount Technology repair facilities and require the parts list and schematics, please send your request to:

Sunair Electronics, LLC.
Customer Service
3400 SW 60th Ave.
Ocala, Fl. 34474 U.S.A.
Phone: 352-873-4000
Fax: 352-854-6238

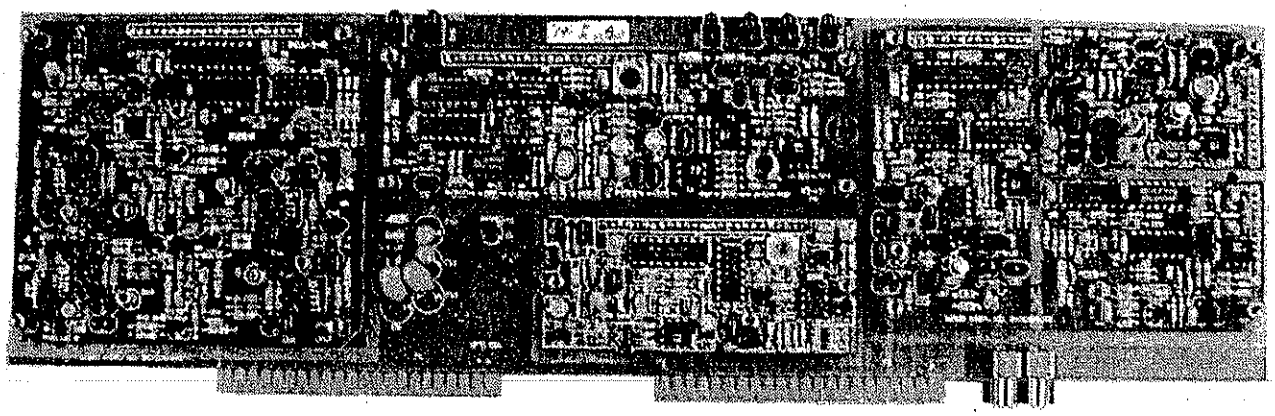

Figure 1 P/N 8076060095 Revision A Synthesizer Module Assembly
(Old Revision)

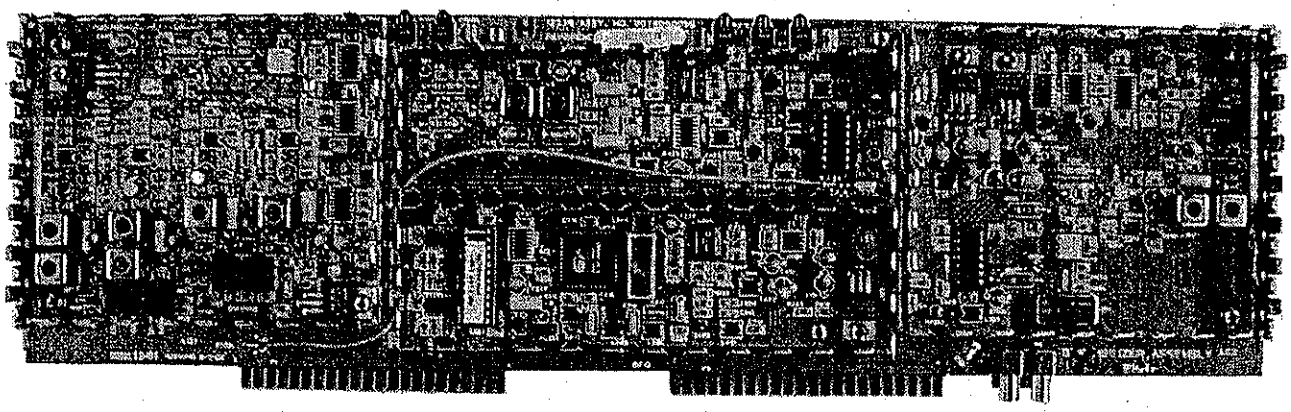

Figure 2 P/N 8076060095 Revision B Synthesizer Printed Circuit Assembly

ADDENDUM

Title : High Stability Reference Oscillator start-up characteristics

Number : 8076-0287

Date : 09 April 03

Equipment(s) Affected : RT-9000A & RT-9000B HF/SSB Transceivers
R-9200 & R-9210 HF/ SSB Receivers
T-9400 & T-9410 HF/SSB Transmitter/Exciters

Applicability : Units with High Stability Reference Oscillator option installed

Effectivity : (not applicable)

The following operating provisions apply to units that have the HIGH STABILITY REFERENCE OSCILLATOR option installed. This option utilizes an Ovenized Frequency Standard and requires additional time to attain specified frequency accuracy and stability performance at initial power-up or after prolonged system shutdown. The operator must consider these requirements and their effect on initial performance when operating this equipment. This condition can be avoided by keeping the radio continuously powered-up. This practice is considered normal for equipment with High Stability Frequency Standards. The following statements summarize behavior of a properly configured radio immediately after the initial power-on event:

1. If the unit has just been installed at the customer site or has not been powered-up for a prolonged time, after power-up the unit may intermittently display "Oven Warm Up" messages.

2. If the unit does not display the message described above, it still inhibits the unit's I/O communication facilities from being used for a short time. The I/O capability is required for operation with remote control units, preselectors, or embedded ALE modules.

3. Unit I/O lockout time is directly related to the unit's internal oven temperature at power-up and the ambient operating temperature. This time typically will be between two (2) minutes and 30 minutes under low temperature conditions.

4. After the above I/O lockout time elapses, the unit becomes fully functional but at reduced Frequency Accuracy.

5. During the first hour of operation while the oven is stabilizing at its design temperature, invoking the Built In Test Equipment (BITE) function may produce erroneous failures. After this time, all BITE test failures should be considered genuine and appropriately addressed.

6. Frequency Accuracy is specified to be within one (1) part in 10^7 within one (1) hour after power-up.

7. Frequency Accuracy is specified to be within one (1) part in 10^8 within 72 hours after power-up.

8. The unit must be maintained in a continuous "power on" state to achieve the specified frequency accuracy and stability specifications. The benefits offered by the HIGH STABILITY REFERENCE OSCILLATOR option are available only if this condition is satisfied.

9. Any power interruptions will cause the unit to execute its normal start-up I/O lockout interval as previously described.

Copyright © 2003 by Sunair Electronics Inc.